THE ANALYSIS OF CONTINUOUS BEAMS FOR HIGHWAY BRIDGES IV

COMPUTER PROGRAM

FORTRAN IV-F

BY

GLENN H. SIKES
HIGHWAY BRIDGE ENGINEER

A USER'S MANUAL

PRESENTED BY THE

BRIDGE DIVISION

R. L. CHAPMAN, JR.
STATE HIGHWAY BRIDGE ENGINEER

BERT LANCE
DIRECTOR

J. O. BACON
STATE HIGHWAY ENGINEER

EMORY C. PARRISH
EXECUTIVE ASSISTANT DIRECTOR

W. M. WILLIAMS
SECRETARY-TREASURER

ATLANTA, GEORGIA

APRIL, 1971

February 25, 1976

A NOTE TO USERS WHO ARE NOT IN THE GEORGIA DOT ...

... This is a reprint of the User's Manual as prepared in 1971. It remains technically up to date.

However, there was a reorganization of Georgia State Government in July, 1972. Therefore, all queries concerning this manual or the program should be addressed to

OFFICE OF SYSTEMS DEVELOPMENT
GEORGIA DEPARTMENT OF TRANSPORTATION
NO. 2 CAPITOL SQUARE
ATLANTA, GA 30334

FOREWORD

"The Analysis of Continuous Beams for Highway Bridges" computer program has been used by the Bridge Division of The State Highway Department of Georgia for fourteen years resulting in the savings of untold thousands of dollars in the design of continuous span bridges. There has been vast savings by the elimination of the voluminous amount of computations required in the analysis. Moreover, the Engineer has been able to make a more thorough economic study of each design. This has resulted in a more economical structure than would otherwise have been practicable. The results have exceeded by far our fondest expectations.

The program was originally written in 1957 by Mr. Jose M. Nieves-Olmo to be used with an IBM 650 computer, the computer system being used at that time. In order to have the program function as efficiently as possible, the program was written in absolute machine language. As a result the computer time required per analysis was approximately fifteen minutes.

In 1962, after the installation of an IBM 1620 computer, the program was recoded by Mr. Nieves in a symbolic language (SPS II) for use with the 1620 system. The 1620 program utilized essentially the same input, output and Method of Solution as the 650 program but required only one-fifth the running time (approximately three minutes). The 1620 program was a "one pass" program if used with a 60^k core storage 1620, whereas the low core storage capacity of the 650 necessitated the subdivision of the program into five phases for execution.

Since the delivery of an IBM 360 was expected during the latter part of 1966, the decision was made to rewrite the program for use with the IBM 360 computer system using Fortran IV programming language. Again the Method of Solution and Flow Charts of the 650 program were followed closely although several new features were added to the program. The rewriting and testing of the program was completed in June, 1967, with very satisfactory results. The computer time required per problem varied from ten to forty seconds. It is significant to note the evolution of the programming language with each succeeding generation of computer system.

The program has again been rewritten (4th version) and includes many new features which make the program more versatile and comprehensive. Whereas, the first Fortran version was written in Basic Fortran IV, this new version is written in F-level Fortran IV. The same method of solution used in the earlier versions is still used in this new version, but the method has been expanded as required by new features of the program. This new version was developed during the latter part of 1970 and has been tested since the first of 1971 with excellent results. It includes the provisions of the A.A.S.H.O. Specifications through the 1971 Interims.

This volume, then, presents complete operating instructions and a detailed description of the Fortran IV-F level program which will enable the user to apply the program without referring to the manner in which the problem is solved. For information on the Method of Solution and Flow Charts, refer to Volume 1 and 2 of the write-up "The Analysis of Continuous Beams for Highway Bridges", written for the IBM 650 computer (these volumes give general information of the Method of Solution that is still valid).

RESTRICTION

THIS VOLUME MAY BE REPRODUCED FOR USE SOLELY BY THE ORGANIZATION TO WHOM IT WAS PRESENTED BY THE STATE HIGHWAY DEPARTMENT OF GEORGIA. UNDER NO CIRCUMSTANCES IS THIS MANUAL, OR ANY PART THEREOF, TO BE REPRODUCED FOR AND/OR DISTRIBUTED TO ANY OTHER ORGANIZATION WITHOUT THE EXPRESSED WRITTEN PERMISSION OF THE STATE HIGHWAY DEPARTMENT OF GEORGIA.

DISCLAIMER

ALTHOUGH THIS PROGRAM HAS BEEN SUBJECTED TO MANY RIGOROUS TESTS - ALL WITH EXCELLENT RESULTS - NO WARRANTY, EXPRESSED OR IMPLIED, IS MADE BY THE STATE HIGHWAY DEPARTMENT OF GEORGIA AS TO THE ACCURACY AND FUNCTIONING OF THE PROGRAM, NOR SHALL THE FACT OF DISTRIBUTION CONSTITUTE ANY SUCH WARRANTY, AND NO RESPONSIBILITY IS ASSUMED BY THE STATE HIGHWAY DEPARTMENT OF GEORGIA IN ANY CONNECTION THEREWITH.

FEB 10, 1986

--PROGRAM REVISION--

The "Analysis Of Continuous Beams For Highway Bridges" Computer Program has been revised.

The output values for the Allowable Fatigue Stresses as discussed on page 67 of the 1976 program user's manual have been deleted and replaced by the Actual Range in Stresses for the Top and Bottom of the steel. The Allowable Fatigue stresses can now be found in table 10.3.1A of the 1983 AASHTO Specifications.

The Actual Range in Stresses is calculated by taking the difference between the positive (D.L. + L.L.) stresses and the negative (D.L. + L.L.) stresses.

TABLE OF CONTENTS

		PAGE
I.	PROGRAM ABSTRACT	1
II.	DESCRIPTION OF THE PROGRAM	2
III.	PREPARING THE INPUT DATA (See, also, the Example Problems)	5
	Design Data	6
	Identification Card	6
	Beam Constants Card	7
	Optional Beam Constants Card	11
	Span Data	14
	Span Card	14
	Load Cards	20
	Load Card Examples	23
IV.	THE OUTPUT DATA (See, also, the Example Problems)	56
	Input Data	56
	Beam Section Properties	56
	Beam Span Properties	59
	Moments	62
	Stresses (Actual and Allowable Fatigue)	65
	Shears, Shear Connector Spacings and Reactions	71
	Dead Load Deflections	74
	Live Load Deflections	75
V.	MISCELLANEOUS APPLICATIONS	76
VI.	ERROR MESSAGES	78
VII.	EXAMPLE PROBLEMS	80

PAGE

VIII. OPERATING PROCEDURE 150

Compatibility 150

Compilation 150

Key-Punch Instructions 152

Computer Operator Instructions 153

THE ANALYSIS OF CONTINUOUS BEAMS FOR HIGHWAY BRIDGES IV

ENHANCEMENT 4.1

INFLUENCE LINE DATA OUTPUT

JULY 15, 1974

The "Continuous Beam Analysis" computer program has been modified to allow the Bridge Designer to obtain influence line data as output from the program. This will alleviate having to make several conventional runs to obtain this data. The program will not output both influence line data and conventional data (moments, deflections, etc.) in the same run. To do this would make the program too combersome and, overall, less efficient. If both outputs are required, the problem should be processed twice, once for normal output and again for the influence line output.

INPUT DATA

The designer should enter the digit one (1) in card column 57 of the Beam Constants card (1 in c.c. 1) to request influence line data output. For conventional output, leave this column blank. No other revisions to the input data have been made. Note that influence line data depend on the beam being properly and completely defined and do not depend on beam loads being defined except as noted in the input requirements, i.e., the Live Load Class in still required.

OUTPUT DATA

The output data for a conventional run have not been altered. The following discussions is for influence line data output only.

The influence line data output will consist of influence line ordinates and areas for moments, shears, deflections and reactions. The sign convention of ordinates and areas are the same as conventional output, i.e., a negative ordinate/area produces a negative moment, shear, etc. In the following discussion refer to an example output.

MOMENTS

The output data will contain influence line ordinates at span twentieth points for moments at each span tenth point and over the intermediate supports. For points in the end spans, the ordinates are given in the end span and the adjacent interior span. For points in the interior spans, the ordinates are given in that interior span and the two adjacent spans. Therefore, no more than three spans of influence line ordinates are given for any one point, i.e., the entire line is not given.

The moment influence line data are listed first, that is, immediately after the printout of the input data and beam section and span properties. Moment influence data are listed for each span on separate pages. For each span tenth point in an exterior span there will be two lines of influence line ordinates and one line containing influence line areas. For each span tenth point in an interior span there will be three lines of influence ordinates and one line containing influence line areas. The point for which the ordinates and areas are given is identified in the output column "M.P". The first digit is the span number and the second digit (decimal) indicates the tenth point location. The span in which the ordinates are located is given under the output column "S". The influence line areas are given immediately after the ordinates and consists of the positive portion area, negative portion area, and net area (sum of positive and negative areas). The influence line areas are given for the ENTIRE influence line

(end of beam to end of beam) and NOT for that portion of the influence line presented. Of course, with two-span units and three-span units (considering points in interior span) the entire influence line ordinates are presented. The influence line ordinates at the span(s) twentieth points are listed from left to right (forward along beam) under the heading "1 2 3 ... 19". Negative influence line areas are for negative moment, etc. The influence line ordinates are given in unit-feet per unit of load; that is, a one kip load will produce the ordinate value in kip-feet of moment. The influence line areas are in unit-feet per unit per foot. A uniform load of one kip per foot would produce the area value in kip-feet of moment.

SHEARS, DEFLECTIONS, REACTIONS

The influence line data for shear, deflection, and reaction at intermediate supports are given for each span on separate output pages. That is, one page will contain the influence line data for shear, deflection and reaction for one span. The shear influence line data are listed first, the deflection influence line data second, and the reaction influence data third, if appropriate.

Shear

Influence line ordinates for shear are given at the ends of the span and at the span twentieth points. Two lines of ordinates are given: first, shear ordinates for loads immediately to the right (V RT.) of the point for which the ordinates are valid, and second, shear ordinates for loads immediately to the left (V LT.) of the point for which the ordinates are valid. It should be clearly understood that these two lines of ordinates completely defined the influence line for shear for any point in the span due to a unit load in that span. This is true since shear for a concentrated load (unit load) is constant from point of load to adjacent support. The shear influence line ordinates for loads to the left (V LT.) are equal to the shear influence line ordinates for loads to the right (V RT.) minus a unit value (1.0). The influence line for shear at the span 4/10 point, for example, would simply be the ordinates on the VLT. line from the beginning of the span to the 4/10 point, and the ordinates on the VRT. line from the 4/10 point to the far (right) end of the span, etc. Influence line ordinates are given in units, i.e., a one pound load produces the ordinate value of shear in pounds. The twentieth points are identified by the heading, "1 2 3 ... 19". Influence line ordinates for shear are not given for a unit load in the adjacent spans.

Influence line areas for shear are given at the ends of the span and at the span tenth points. Positive areas are listed first, negative areas are listed second, and net areas are listed last. These areas are for the entire influence line and not just for that portion given within the span. Areas are given in units per units per foot. A one kip per foot load would produce the influence line area of shear in kips.

Deflection

The deflection influence line ordinates and area are listed immediately after the shear influence line data. Influence line ordinates are given for deflection at only one point within a span, and the ordinates listed for only that span (no ordinates given in adjacent spans). The influence line ordinates are computed for that point where live load deflection is assumed to be a maximum. It actually is the point where maximum deflection occurs (considering twentieth points) when a uniform load is placed on that span only. Ordinates are listed at each twentieth point in the span under the heading "1 2 3 ... 19". The point for which the influence line ordinates are given is identified in the output column "M.P" where M is the span number and the fraction part (.P) indicates the twentieth point location as a fraction of the span. Ordinates are given in inches per kip.

The positive area (downward deflection) of the entire influence line is given in inches per kips per foot. Negative and net areas are not given.

Reaction

Reaction influence line ordinates and area are listed after the deflection influence line data for the interior support at the right end of the span (ahead). Two lines of ordinates at span twentieth points are listed. The first line is for the span to the left (back) of the support and the second line is for the span on the right (ahead). The influence line ordinates at the span twentieth points are listed for each span from left to right under the heading "1 2 3 ... 19". The numbers of the two spans adjacent to the support are listed in the output column "R" and the number of the span in which the ordinates are given is listed in the "S" column. Note that the influence line ordinate at the support is not listed. It will always be equal to one (1.0) for an unyielding support. The positive area of the entire reaction influence line is given. However, the negative and net areas of the influence line are not given. The units of the reaction influence line data are the same as the shear influence line data.

I. PROGRAM ABSTRACT

TITLE: THE ANALYSIS OF CONTINUOUS BEAMS FOR HIGHWAY BRIDGES IV

AUTHOR: Glenn H. Sikes
Highway Bridge Engineer (CE IV)

This program is a revision of the original computer program, "The Analysis of Continuous Beams for Highway Bridges", written by Mr. Jose M. Nieves-Olmo.

PURPOSE/DESCRIPTION: This program performs the complete analysis of a continuous beam for a highway bridge and reports the moments, stresses, shears, reactions, deflections and shear connector spacings produced by the dead loads and the standard highway live loads (including the special military loading and the sidewalk live load) defined by the A.A.S.H.O "Standard Specifications For Highway Bridges," 1969, Interims 1970, 1971.

MATHEMATICAL METHODS: Classical theories for the analysis of statically indeterminate structures are used. Simpson's method is used to evaluate the integrals required to compute the elastic properties of the beam and influence line areas. Moment-Area Theorems and Maxwell's Law of Reciprocal Deflections are used to compute deflections and influence lines for deflections. One-Cycle Moment Distribution is used for the distribution of fixed-end moments. For a detailed description of the Method of Solution, see Volume 1 of the write-up, "The Analysis of Continuous Beams for Highway Bridges," written for the IBM 650 computer.

RESTRICTIONS/RANGE: The beam may be of concrete, steel or composite concrete-steel construction. The number of spans may vary from two to eight, with any combination of lengths. The minimum span length for accurate truck live load is fourteen feet. The program recognizes practically any type of variation of the cross section. Accuracy is well within that required for design. All possible live loading conditions are considered to insure that a maximum is obtained for each value under consideration. The program will not analyze a continuous beam that acts as a rigid frame with the substructure, nor a continuous beam with intermediate hinges.

PROGRAMMING LANGUAGE: Fortran IV - F programming language was used with floating-point arithmetical computations. The Fortran IV high-level language was used to obtain computer independency.

ADDITIONAL REMARKS: Core storage requirements are approximately 122,000 positions (bytes in the IBM 360). Running time varies from 15 to 60 seconds (IBM 360, Mod. 50) depending on the number of spans, variation of cross section, and type of beam (composite or non-composite). Input is from punched cards with printer output. No other intermediate I/O devices are used.

FOR MORE INFORMATION DIRECT INQUIRIES TO: Russell L. Chapman, Jr.
State Highway Bridge Engineer
State Highway Department of Georgia
#2 Capitol Square
Atlanta, Georgia 30334
Telephone No. 656-5280

II. DESCRIPTION OF THE PROGRAM

This program performs all the necessary computations and logical decisions for a complete analysis of a continuous beam for a highway bridge. The analysis will solve for the final moments, stresses, shears, shear connector spacings, reactions, and deflections produced by the dead loads and the Standard Highway Loads defined by the American Association of State Highway Officials' "STANDARD SPECIFICATIONS FOR HIGHWAY BRIDGES," 1969, Interims 1970, 1971.

Some of the common types of beams that the program can analyze are:

A. Concrete Beams or Girders.
   1. Flat slab or rectangular beams with constant or variable depth.
   2. T-Beams with constant or variable depth.
   3. Box Girders with constant or variable depth.

B. Steel Beams or Girders.
   1. I-Beam of variable WF sections or beams of other shapes.
   2. I-Beam with cover plates of variable size and length.
   3. Plate girder with web of variable width and depth, and flange plates of variable size and length.

C. Composite Concrete-Steel Beams or Girders.
   1. Any of the above Steel Beams or Girders with composite action for any part of the beam or girder length.

Loads considered in the analysis:

A. Dead Loads.

Four types of dead loads are considered in the analysis as follows:

1. Dead load due to the weight of the beam itself, which takes into account the variation of the cross section.
2. Superimposed uniformly distributed dead load along the beam. Composite and non-composite uniform dead loads are computed separately.
3. Concentrated dead loads along the beam. Composite and non-composite concentrated dead loads are computed separately.
4. Partial uniformly distributed dead load. Composite and non-composite partial uniform dead loads are computed separately.

The effect of each one of these loads is computed independently of the others.

B. Live Loads

The live loads considered in the analysis are:

1. Standard Highway Loads (H or HS Truck and Lane).
2. Special Military Loading (optional).
3. Impact Allowance.
4. Live Load on Sidewalks.

The highway loading on the roadway of the bridge consists of a standard truck or of lane loads which are equivalent to truck trains. Two systems of loading are provided for in the program; the H loading and HS loading as defined in the A.A.S.H.O. Specifications, 1969. For either type of loading the program computes the effect of the standard truck and the corresponding lane loading, and selects the maximum of the two. Military loading is considered if requested. The program also has a provision for omitting the truck or lane live load or both.

The analysis of HS loading considers the following loading conditions in selecting the maximum effect due to truck loading:

1. Tractor truck with no trailer (H Truck).

2. Variable axle spacing of the tractor truck and semi-trailer (14 feet to 30 feet inclusive).

Live load effects produced by H or HS loadings are increased automatically for an impact allowance which is computed as a variable factor depending on the span length and the type of data under consideration in accordance with Section 1.2.12. of the A.A.S.H.O. Specifications, 1969.

The live load on the sidewalk is considered as a uniformly distributed load which is placed on a portion or portions of the beam as required to produce maximum moments, shears, etc., at the point under consideration.

The input information required for the solution consists basically of the loads to be considered, the properties of the material, and the actual dimensions of the beam to be analyzed. Expressed in very general terms the program will perform the following operations during each complete run:

1. Compute the physical properties of the cross section along the beam, such as area, moment of inertia, etc.

2. Compute elastic properties of the beam, such as stiffness factors, carry-over factors, etc.

3. Solve for the dead load moments, stresses, shears, etc.

4. Develop influence lines for moments, shears, etc.

5. Place or move the live load as required to select maximum moments, shears, reactions, etc.

6. Compute maximum actual stresses and allowable fatigue stresses.

7. Compute dead load deflections and maximum live load deflections.

A composite concrete-steel beam is automatically analyzed by the program three times (runs) as follows:

1. The purpose of run number 1 is to compute the effect of the loads on the non-composite steel beam. Four loads are considered in this run: the weight of the beam, non-composite uniform dead load, non-composite concentrated dead loads, and non-composite partial uniform dead load. All other loads are ignored! This run is represented by the initial phase of construction when the beam must carry a portion of the structure by itself, i.e., no composite action.

2. Run number 2 computes the effect of dead loads acting on the composite properties of the beam. In computing the properties of the composite beam section a modular ratio equal to 3N (3 times normal value of N) is used to transform the concrete slab into equivalent steel area. This factor is used to compute the long-term effect on the concrete and steel due to creep in the concrete. Three loads are considered in this run: composite uniform dead load, composite concentrated dead loads and composite partial uniform dead load. All other loads are ignored.

3. Run number 3 computes the effect of live loads acting on the composite properties of the beam. In computing the properties of the composite beam section a modular ratio equal to N (normal value) is used to transform the concrete slab into an equivalent steel area. This factor is used to compute the short-term effect on the concrete and steel due to live loads. The live loads are the only loads considered in this run.

After completing the three runs, the moments, shears, deflections, stresses, are summed for presentation in the output.

III. PREPARING THE INPUT DATA

In the following discussion of the input data refer to the blank input data forms or the input forms used in the example problems. The input data is filled-in on two types of input data forms: Design Data and Span Data. Only one sheet of the Design Data is required per problem and this must be the first sheet of each problem. The Design Data contains the data that remains constant for the entire length of the continuous unit, i.e., does not vary from span to span.

The Span Data input form describes the individual spans by defining the beam cross section and the loads that are unique for that span. One Span Data input sheet must be filled-in for each span, and these forms must be given in the same order as the spans in the continuous unit. Since the number of spans can vary from two to eight, the number of Span Data input forms will vary likewise. The total number of input sheets will then be the number of spans plus one (Design Data).

Note that the position of the implied decimal point is shown on the input data forms. However, the implied position of the decimal can be overridden by entering a decimal in the appropriate card column of the data field. The decimal is then punched along with the data and becomes the controlling position. Otherwise, the decimal is not punched, i.e., does not occupy a card column.

A negative quantity is denoted by a minus sign (-) placed before (immediate preceding card column) the first significant digit of the data field. However, for simplicity and to prevent possible data processing system errors due to key-punching, it is suggested that the minus sign be placed in the first card column of the data field. The card columns between the minus sign and the first digit can be left blank or filled-in with zeros.

All input data will be printed out as part of the formal output data.

To facilitate the processing of the data, the input data sheets should be numbered, arranged in sequence, and attached in some manner so that the sheets will not become separated.

The input data forms contain considerable instructional data so that the designer usually will not have to refer to this manual for information after becoming familiar with the program.

DESIGN DATA

One Design Data input sheet is required per continuous unit and this form must be the first sheet of the input data. Following is a discussion of the input requirements of the Design Data.

A. IDENTIFICATION (* in c.c. 1)

Card columns one through four contain data for program identification and are of no significance to the user. Card columns five through eight are reserved for the Problem Number. *This space should be left blank by the designer, since a unique number will be assigned to each problem and recorded in the log book of the Bridge Division computer runs. This helps expedite the processing of the problem and also assists in subsequent runs of the problem after minor revisions have been made. The Problem Number will be associated with any "Error Messages" received and will appear in the output listing. Card columns nine through eighty are used to enter any pertinent alphabetic or numeric remarks that describe the continuous unit. The project number, county, date, designer's name, etc., should always be given in the Identification.

The program has provision for any number of Identification lines. If another Identification line is to follow the line being filled-in, the continuation code "CONT" must be entered in card columns 77-80 of the line being filled-in. Otherwise, leave these card columns blank or use them for remarks. The Identification data will be listed in the output data for easy recognition.

* Procedure used by Bridge Division, State Highway Department of Georgia.

B. BEAM CONSTANTS (1 in c.c. 1).

The digit one (1) in card column one is used for identification purposes and is of no significance to the user.

1. BEAM IDENTITY (c.c. 2-13).

The Beam Identity is the name of the beam or continuous unit. This data will head every page of the output listing. The data can be alphabetic or numeric. For example: "BEAM 1 LT." could be used to designate beam one of the left bridge.

2. NS (c.c. 14).

"NS" is the number of spans in the continuous unit. The program can analyze any continuous unit from two (2) spans to eight spans. Therefore, the digit entered in this column must be one of the following digits: 2, 3, 4, 5, 6, 7 or 8. A blank, zero, or other digit or character will cause the program to abort.

3. L_L Class (c.c. 15-18)

Enter the standard highway live load designation in this data column. For example: HS20, H20, HS15, H15. Always place the numeric portion of the designation in card columns 17 and 18. The letter "H" is always placed in card column 15. Therefore, card column 16 would be blank in the case of "H" loading.

Do not leave this data field blank even though no highway loads exist (the elimination of highway loads will be discussed in a later section). So, always enter a valid highway live load designation. The program will not assign one by default. The numeric portion of the live load classification cannot be zero or blank. This numeric data is used to compute the truck wheel loads,and lane uniform and concentrated loads.

Assume the numeric portion of the live load classification (xx) is twenty (20). Then the large wheel load is computed as 0.80 (XX) = 16.0 kips. The lane uniform live load is computed as 0.016 (xx) = 0.320 kips per foot (equivalent to one row of wheels). The lane concentrated load(s) for moment is computed as 0.45 (xx) = 9.0 kips. And, the lane concentrated load for shear is computed as 0.65 (xx) = 13.0 kips. Note that the concentrated loads are equivalent wheel loads, i.e., one-half the total load. The small wheel is taken as one-quarter of the large wheel = 4.0 kips. These proportions are the same with the other live load classifications.

4. TYPE (c.c. 19-21).

The beam Type is used to define the type of beam to be analyzed. Card column 19 is used to indicate whether the beam is composite or non-composite. The digit one (1) indicates the beam has no composite action (non-composite) and a blank or zero (0) denotes a composite beam. No other digit or character should be used.

The second column (card column 20) is used to indicate whether the beam is concrete or steel. The digit one (1) defines a reinforced concrete beam,

and a blank or zero (0) denotes a steel beam. No other digit or character should be used. A concrete beam should also be defined as non-composite.

The third column (card column 21) is used to designate an exterior or interior beam. A blank or zero (0) defines an interior beam, and the digit one (1) denotes an exterior beam. No other character is valid. The exterior/interior beam code is used by the program only when the distribution factors are computed by the program, i.e., when these factors are not given in the input data. Therefore, this input item can be skipped over when the user enters his computed distribution factors. However, it is usually a good idea to define the beam as interior or exterior anyway, since it will be so noted in the output data and can be used at a later date for clarification.

5. WDLnc (c.c. 22-26) Form: xx.xxx kips per foot.

"WDLnc" is the superimposed uniformly distributed non-composite dead load acting on the beam. Under ordinary circumstances, the weight of the beam should not be included in WDLnc. The part of the beam that should not be included in WDLnc is the beam proper. Such things as stiffeners, shear connectors, utility supports and diaphragms would be included in WDLnc if they could not be more conveniently defined as concentrated loads. The weight of the beam could be included if the weight of the beam material is set equal to zero so that the beam weight would not be included twice, i.e., the program automatically computes the effects due to the weight of the beam.

If the beam is non-composite, WDLnc is the plain dead load and consists of the deck slab, coping, curbs, railings, future wearing surface, etc. However, if the beam is composite, WDLnc should consist only of the dead load that acts on the beam before it has obtained composite action with the concrete slab, i.e., slab, coping, stiffeners, etc. The weight of the composite slab (including the portion of the slab that is not effective but carried by the beam) should be included in WDLnc since the weight of the composite slab is not included in the weight of the beam proper. In the event of composite shored construction, all dead load would be designated as composite and WDLnc would be zero.

In the analysis of a continuous concrete T-Beam, the portion of the roadway slab that acts as the beam flange should not be included in WDLnc since it is considered a part of the beam proper (cross section).

6. WDLc (c.c. 27-31) Form: xx.xxx kips per foot.

Enter in this data field the uniformly distributed composite dead load. This load is applied to the beam after it has obtained composite action with the roadway slab. Loads that are normally included in WDLc are weight of curbs, railings, future wearing surface, etc. If the beam is non-composite this load would not exist and the value of WDLc would be zero or left blank. Note that for shored composite construction, WDLc should contain all the dead loads.

7. WSW (c.c. 32-36) Form: xx.xxx kips per foot.

"WSW" is the portion of the live load from the sidewalks acting on the beam as a uniformly distributed load. The program assumes that the intensity of the live load from the sidewalks is constant regardless of what portion

or portions of the beam are loaded to produce maximum moments, etc.

8. WG (c.c. 37-40) Form: xxx.x pounds per cubic foot.

Enter as "WG" the unit weight of the material of which the beam is made. For example:

Concrete beams: WG = 150.0
Steel beams : WG = 490.0

If the beam is composite concrete-steel, enter the unit weight of the beam proper, i.e., steel portion. A value of zero eliminates the beam weight.

9. E (c.c. 41-44) Form: xx.xx (10^6) pounds per square inch.

"E" is the modulus of elasticity of the material of which the beam is made in million pounds per square inch. For example:

Concrete beams: E = 2.90
Steel beams : E = 29.00

If the modulus of elasticity is given a value of zero or left blank, the program will by-pass all computations for deflections. In the case of composite concrete-steel beams, E should be the modulus of elasticity of the steel beam.

10. BM.SPAC. (c.c. 45-50) Form: xx.xxxx feet.

This space is for entering the beam spacing. The beam spacing is used in conjunction with the interior/exterior beam type code to compute the live load distribution factors. The program computes the moment, end shear and deflection distribution factor as follows:

Distribution Factors

Beam / Material	Interior	Exterior	
	All values of S	$S \leq 6$	$S > 6$
Steel	S/5.5	$\frac{S}{5.5}$	$\frac{S}{4+S/4}$
Concrete	S/6.0		

Where: S = average beam spacing in feet.

If the designer chooses to enter his own distribution factors (all three) as explained in a later section, then the beam spacing should be ignored, i.e., left blank. If only one or two distribution factors are entered by the designer, the beam spacing and interior/exterior type code are required so that the remaining distribution factors can be computed.

11. $\sum Zr$ (c.c. 51-56) Form: xxx.xxx kips.

Enter in this space the total design range of one transverse row of shear connectors. Of course this data would not be required with a non-composite continuous unit. See following page for examples.

Example 1: Channels

Assume a ten inch length of channel and 500,000 cycles of maximum stress;

Then: $W = 10$ and $B = 3{,}000$ pounds

Therefore $\sum Zr = 10\ (3{,}000) = 30.0$ kips

Example 2: Studs

Assume four $\frac{3}{4}$ inch diameter studs per transverse row and 100,000 cycles of maximum stress;

Then: $\alpha = 13{,}000$ and $d = 0.75$

Therefore $\sum Zr = 4\ (13{,}000)\ (.75)^2 = 29.25$ kips $(H/d \geq 4)$

C. OPTIONAL BEAM CONSTANTS (2 in c.c. 1)

The Optional Beam Constants Card provides a flexible means by which the designer can alter the constants and procedures used in the analysis. This data card is always required for processing. Therefore, some data must be entered (zeros if nothing else) so that the line will be key-punched, i.e., a blank line is not punched. The digit two (2) in card column one is for identification purposes.

1. D_M^F (c.c. 2-6) Form: x.xxxx row of wheels

If the designer wishes to compute the distribution factor for live load moment (or if the distribution factor is different from what the program would compute) rather than have the program do the computation (which requires that the beam spacing and interior/exterior type code be defined), the distribution factor should be determined and entered in this data field. If the distribution factor for live load moment (D_M^F) is given a value of zero or left blank, the factor is computed by the program as shown in a previous section. D_M^F is that portion of a row of wheels (not axle) that is resisted by the beam. The program works on the assumption that the lane uniform live load is two rows of wheels like the truck live load, and the concentrated loads are axle loads consisting of two wheels. This factor, D_M^F , is also used for distribution of live load shear for loads placed away from the end of the span.

2. D_{Ve}^F (c.c. 7-11) Form: x.xxxx wheel

This data field is for entering the live load distribution factor for end shear. This factor is only applied to a wheel load when that wheel is at the end of the continuous unit or at an intermediate support. Therefore, it is only used when computing maximum reactions and end shear. If this factor is not given in the input data, the value of the distribution factor for moment (D_M^F) is used, i.e., the program does not attempt to compute this value. See Article 1.3.1 (A) of the A.A.S.H.O. Specifications, 1969.

3. D_D^F (c.c. 12-16) Form: x.xxxx row of wheels

"D_D^F" is the live load distribution factor for deflections, i.e., that portion of a row of wheels that is applied to the beam to compute maximum live load deflections. If a value of zero is given or the space is left blank, the program will use the distribution factor for moment, D_M^F. See Article 1.7.13 of the A.A.S.H.O. Specifications, 1969.

4. Modular Ratio: N and 3N (c.c. 17-20) Form: xx and xx

These two data columns are used to enter the modular ratio of the modulus of elasticity of steel to the modulus of elasticity of concrete. If the beam is steel and non-composite, these values are not used by the program, and therefore, they can be ignored, i.e., left blank. On other types of beams (concrete or composite) the program will assume a value of ten (10) if no value is given for "N". Otherwise, the program will use the input value. If no value is assigned "3N", the program will use three times the value of "N". The "3N" modular ratio is used only in the analysis of composite beams. Note that the designer has the option of using values other than 3 times N by entering the desired modular ratio for "3N". For example, if the value of "1N" is entered as "3N", the composite dead loads would be applied to the same beam properties as the live loads, i.e., the long term effect of creep due to dead loads is not considered.

5. Live Load Skip (c.c. 21-23) Form: 1 or blank (or zero)

If the designer desires that the truck live load be omitted, the digit one (1) should be entered in card column 21 under "T". No other digit is valid. Leave the card column blank if truck live load is to be considered.

In order to eliminate the lane live load, the digit one (1) is entered in card column 22 under "L". No other digit is allowed. Otherwise, the data column is left blank for lane loading to be considered.

Military (sometimes called special Interstate Loading) live loading can be eliminated by entering the digit one (1) in card column 23 under "M". No other digit is valid. Leave this column blank if military loading should be investigated.

Note that the designer can effectively eliminate all highway live loads in this manner, as in the case of a pedestrian bridge.

6. No. Live Load Cycles (c.c. 24-30) Form: xxxxxxx Cycles

Enter in this data field the number of cycles of maximum live load stress. This data is not used if the beam is concrete, and in that case the number of cycles can be left blank. If a value of zero is given or if the data field is left blank, the program will assume a value of 500,000 cycles when the beam is steel. The number of cycles is constant for all portions of the continuous unit regardless of the length of loaded portion. The number of maximum live load cycles is used to compute allowable fatigue stresses. See Article 1.7.3 of the A.A.S.H.O. Specifications, 1969 and Interims 1970, 1971.

7. Fy (c.c. 31-36) Form: xxx.xxx ksi.

"Fy" is the minimum yield strength of the beam material (steel). This value is used in the computations for allowable fatigue stresses and would not be required if the beam is concrete. A magnitude of 36.0 (A36) ksi is assumed by the program if this space is left blank and the beam is steel.

NOTE A:

The type of steel is assumed to be the same throughout the entire continuous unit. So, if more than one type of steel is used in the same continuous unit, enter the type that is predominate. Later, corrections can be made by the designer for the other type of steel fatigue stresses.

8. Fu (c.c. 37-42) Form: xxx.xxx ksi.

"Fu" is the minimum tensile strength of the beam material (steel). This stress is used in the computations for allowable fatigue stresses, and would not be required if the beam is concrete. A magnitude of 58.0 (A36) ksi is assumed by the program if the space is left blank and the beam is steel. Refer to Note A in the discussion of Fy.

9. Fc (c.c. 43-47) Form: xx.xxx ksi.

"Fc" is the allowable concrete compressive stress in flexure. This stress is used to compute resisting moments, steel areas, etc., and would not be required

if the beam is steel (composite or non-composite). If the stress is not given in the input, the program will assume a value of 1.200 ksi. Note that this allowable stress is assumed to be constant throughout the continuous unit.

10. Fs (c.c. 48-52) Form: xx.xxx ksi.

"Fs" is the allowable reinforcing steel stress in tension. This stress is used to compute resisting moments, steel areas, etc., and would not be required if the beam is steel (composite or non-composite). If a value is not given for "Fs" in the input, the program will assume a value of 20.0 ksi. Note that this allowable stress is assumed to be constant throughout the continuous unit.

SPAN DATA

The Span Data input form is used to describe each span of the continuous unit. One sheet is required with each span. The write-up assumes that the spans are numbered from left to right with span one being the leftmost span. The Span Data forms are then filled-in beginning with span one. These forms (spans) must be kept in numerical sequence for processing. The Span Data consists of a Span Card and a variable number of Load Cards. Note that each span is completely independent of the other spans.

A. SPAN CARD (3 in c.c. 1)

The digit 3 in card column one is for identification purposes and is of no significance to the designer.

1. M (c.c. 2)

Give the span number of the span being defined in this column, i.e., 1,2, ... 8. For example, enter M=1 for the first span; M = 2 for the second span, etc. The last span number must be equal to the total number of spans entered as "NS" in the Beam Constants Card. This is used by the program for a sequence check and must always be given even though the span may be identical to some previously defined span (see following discussion of S).

2. S (c.c. 3)

When the span being defined (M) is identical (symmetrical) to some previously defined span, the "Repeat Span S" code can be used. In such a case enter the number of the previously defined span as "S" in card column 3. No other remaining data should be given on the Span Data Sheet. Note that the span number "M" is required and should have already been entered as discussed earlier. Using this procedure when possible saves the designer considerable time. It also saves key-punch and verifying time, and also saves time lost from possible errors. In order to use this code, the two spans must be completely identical in cross section and loads. The program assumes the two spans are symmetrical and will rotate (turn around) Span "S" for use as Span "M" rather than translate the span. For example, if Span 3 (M) is defined as being symmetrical and identical to Span 1 (S), then the left end of Span 1 becomes the right end of Span 3; and the right end of Span 1 becomes the left end of Span 3. See Example Problem number two.

NOTE B: IF THE SPAN HAS BEEN DEFINED AS IDENTICAL TO A PREVIOUSLY DEFINED SPAN ($S \neq 0$ OR BLANK), THE REMAINING DATA IN THE SPAN CARD SHOULD BE LEFT BLANK AND NO LOAD CARD DATA GIVEN.

3. L (c.c. 4-9) Form: xxx.xxx feet.

"L" is the span design length, which is normally the distance between the center line of bearings. A minimum span length of 14 feet is required for accurate truck live load effects. However, the other loads are accurate for span lengths less than 14 feet. There is no set maximum length of span. The span length should not be left blank or given as zero except when Note B applies.

4. Number of Ranges (c.c. 10-25)

Card columns ten through twenty-five are used to enter the Number of

Ranges of each data item used to define the span. There are eight data items for which the number of ranges must be given. Listed below are the data items and the minimum and maximum number of ranges allowed.

Data Item	Number of Ranges Allowed	
	Minimum	Maximum
Beam or Web	1	10
Top Plates	0	10
Bottom Plates	0	10
Composite Slab	0	10
Non-composite P-loads	0	20
Composite P-loads	0	20
Non-composite Partial Uniform Load	0	10
Composite Partial Uniform Load	0	10

A range is defined as a portion or length of a span for which the data item (top plates, etc.) remains constant. In the case of concentrated loads (P-loads) the number of ranges is simply the number of loads. The position of the range within the span is defined by giving the distance (range) from the left support to the right end of the range. In the case of a linear or parabolic variation in web depth, a range is that portion of the span for which the slope and parabolic constant remain constant. If a data item does not exist, the Number of Ranges for this data can be left blank. For example, if there are no top plates, the Number of Ranges of top plates (c.c. 12, 13) can be left blank.

EXAMPLES OF RANGE DEFINITION

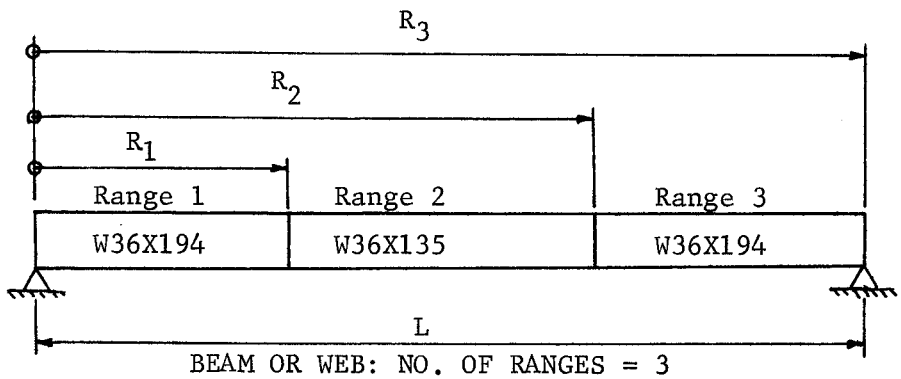

BEAM OR WEB: NO. OF RANGES = 3

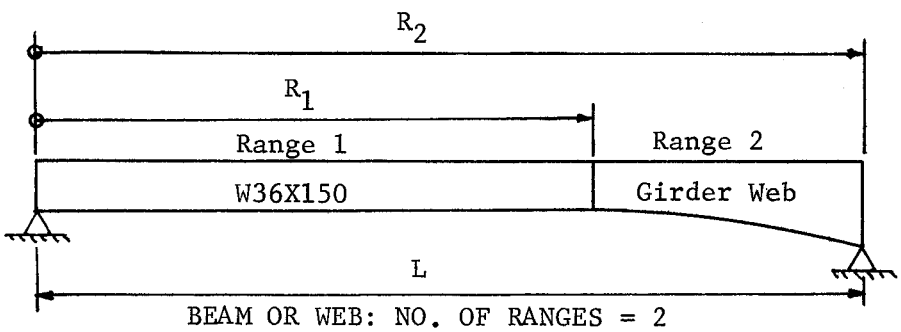

BEAM OR WEB: NO. OF RANGES = 2

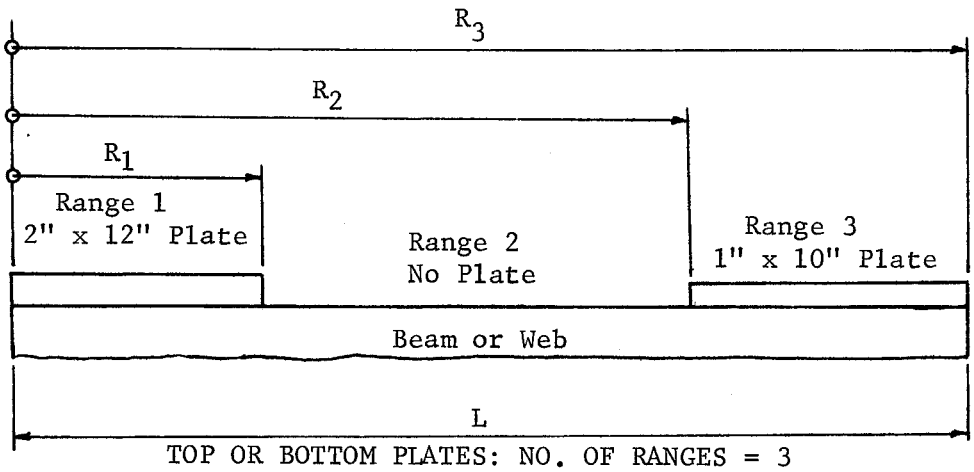

TOP OR BOTTOM PLATES: NO. OF RANGES = 3

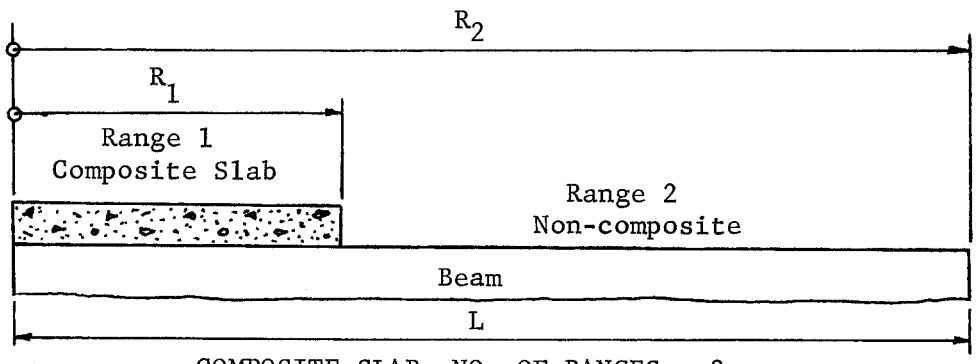

COMPOSITE SLAB: NO. OF RANGES = 2

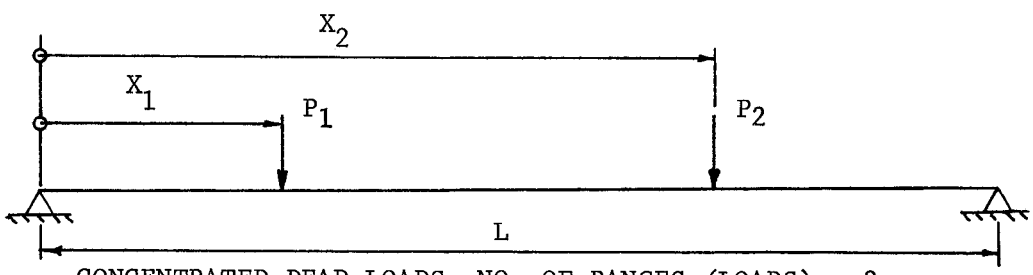

CONCENTRATED DEAD LOADS: NO. OF RANGES (LOADS) = 2
(Non-composite or Composite)

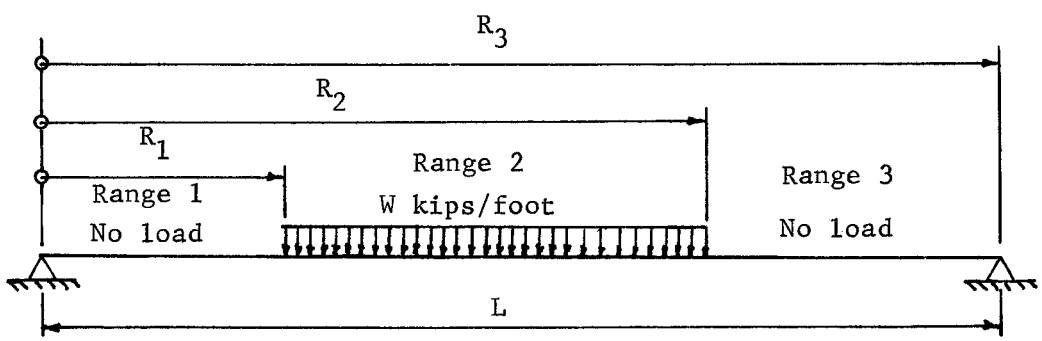

PARTIAL UNIFORM DEAD LOAD: NO. OF RANGES = 3
(Non-composite or Composite)

a. BM. (c.c. 10, 11)

Enter the number of ranges of the beam or web, or combinations of beam and web. Do not leave blank (unless Note B applies) or enter zero, nor enter a value greater than ten (10). A negative value is meaningless.

b. T.PS (c.c. 12, 13)

Enter the number of ranges of top plates in this column. If no top plates are defined in the span, leave this data column blank or enter zeros. Top plates can be used to define cover plates on wide-flange beams (the entire wide flange section is considered a web), flange plates for plate girders, the flange for concrete T-beams, and top slab for a box girder.

c. B.PS (c.c. 14, 15)

Enter the number of ranges of bottom plates in this column. If no bottom plates are defined in the span, leave this data column blank or enter zeros. Bottom plates can be used to define cover plates on wide flange beams, flange plates for plate girders, and bottom slab for a box girder.

d. CS (c.c. 16, 17)

Enter the number of ranges of composite concrete slab in this data column. This would not be required if the beam is non-composite. Even though the beam may be composite, it is not required that the span have composite slab ranges. Leave blank or enter zeros if no composite slab ranges are to be defined in the span, i.e., in span "M".

e. PN (c.c. 18, 19)

The number of non-composite concentrated dead loads (P-loads) in the span should be given in this column. Leave blank or enter zero if no such loads exist.

f. PC (c.c. 20, 21)

Enter the number of composite concentrated dead loads (P-loads) in the span in this data column. If no such loads exist, leave blank or enter zero.

g. WPN (c.c. 22, 23)

Enter the number of non-composite partial uniform dead load ranges in the span in this input column. If the span does not contain any such loads, leave this input column blank or enter zeros.

h. WPC (c.c. 24, 25)

This column is for the number of ranges of composite partial uniform dead load in the span. If the span does not contain any such loads, leave this input column blank or enter zeros.

5. Beam Type (c.c. 26-28)

The Beam Type is used to define the basic type or types of beam section within the span. There are three basic types of beam sections as follows:

BASIC BEAM TYPE	EXAMPLES
1. Wide-flange (WF)	1. W24X55 through W36X300 series.
2. Non-standard (N)	1. Flat slab. 2. Steel H pile. 3. Wide-flange not in above series. 4. Any symm. section with known properties.
3. Girder (G)	1. Steel plate girder. 2. Concrete girder (T-beam). 3. Flat slab. 4. Box girder.

If the beam (within the span being defined) or any portion of the beam is composed of wide-flange sections within the series shown, enter the digit one (1) in card column 26. Then it will be possible to describe the beam section by giving the standard wide-flange beam designation, i.e., W36X150, since the properties of the beam are stored in the program. If the beam cross section is symmetrical and the properties are known (depth, area, moment of inertia), the beam can be defined as a non-standard beam by entering the digit one (1) in card column 27. The non-standard beam designation is used whenever the wide-flange and girder types do not apply. For example, it would be a waste of time to define a W36X194 beam as Non-standard since this would require that the properties (depth, area, I) be given instead of the standard notation. If the beam is comprised of web and flange sections(plate girder, T-Beam, etc.), define the beam type as a girder by entering the digit one (1) in card column 28. Whenever a particular beam type does not apply, leave the appropriate card column blank or enter a zero.

The Beam Type also indicates to the program which Load Cards are going to be used to describe the beam section. Following is the beam types and the Load Cards required with each type.

Beam Type	Codes of Load Cards Required
Wide-flange	400, 401
Non-standard	400, 411, 412, 413
Girder	400, 421, 422, 423, 424, 425

The beam section within a span may be a combination of any of the three types. In this case the Beam Type must contain the digit code one (1) in each appropriate card column. Following are examples of the Beam Type and required Load Cards. (See next page).

Beam Type			Required Load Cards
WF	N	G	
1			400, 401
	1		400, 411, 412, 413
		1	400, 421, 422, 423, 424, 425
1	1		400, 401, 411, 412, 413
1		1	400, 401, 421, 422, 423, 424, 425
	1	1	400, 411, 412, 413, 421, 422, 423, 424, 425
1	1	1	400, 401, 411, 412, 413, 421, 422, 423, 424, 425

By "required Load Card" it is meant that input data must be entered in that Load Card so that the Load Card will be key-punched, i.e., that card is required by the program for processing.

The Beam Type must always contain at least one digit code. No other digit except a one (1) can be used.

B. LOAD CARDS (4 in c.c. 1)

The Load Cards are used to enter the data that describes or defines the beam section for the entire length of the span under consideration, and to enter dead loads that are unique for that span. There are four basic elements of the beam cross section. Following are the four basic elements, the required Load Cards, and the type of data to be entered in the Load Cards.

Basic Element of Beam Cross Section	Load Cards Required	Type of Data
1. Beam or Web	400	Range of beam, feet.
Wide-flange	401	Wide-flange designation.
Non-standard	411	Depth of beam, inches.
	412	Area of beam, in.^{2}
	413	Moment of inertia, in.^{4}
Girder	421	Slope of web at origin, in./ft.
	422	Parabolic constant at origin, in./ft.^{2}
	423	Depth of web at origin, inches.
	424	Thickness of web for range, inches.
	425	Distance to origin, feet.
2. Top Plates	431	Range of plate, feet.
	432	Width of plate, inches.
	433	Thickness of plate, inches.
3. Bottom Plates	441	Range of plate, feet.
	442	Width of plate, inches.
	443	Thickness of plate, inches.
4. Composite Slab	451	Range of composite slab, feet.
	452	Width of composite slab, inches.
	453	Thickness of composite slab, inches.
	454	Distance from top of beam or web to bottom of composite slab, inches.
	455	Area of tension reinforcement where slab is ineffective in resisting tension, in.^{2}

All the Load Cards used to describe the Beam or Web usually are not required to define the beam section. Only Load Card 400 is always required.

Beam or Web Load Cards not used should be left entirely blank. Also if any of the other basic elements do not exist (no top plates, or no bottom plates, or no composite slab) leave all that element's series of Load Cards blank.

There are four types of dead loads that may be placed in the span being defined. These loads are non-composite and composite concentrated loads, and non-composite and composite partial uniform loads. Following are the different loads, their associated Load Cards, and the type of data entered in each Load Card.

Loads	Load Cards Required	Type of Data
Non-composite P-loads	461	Distance to P-load from left end of span, feet.
	462	Magnitude of P-load, kips.
Composite P-load	471	Distance to P-load from left end of span, feet.
	472	Magnitude of P-load, kips.
Non-composite Partial Uniform Load	481	Distance to right end of partial uniform load from left end of span, feet.
	482	Magnitude of partial uniform load, kips/foot.
Composite Partial Uniform Load	491	Distance to right end of partial uniform load from left end of span, feet.
	492	Magnitude of partial uniform load, kips/foot.

If any of the loads do not exist, the Load Cards for those loads should be left blank.

Immediately to the left of card column one is a letter or symbol which will assist the designer in determining the type of data that should be entered in the Load Card, i.e., R = Range, D = Depth, W = Width or Uniform Load, A = Area, I = Moment of Inertia, T = Thickness, P = Concentrated P-loads, etc. Each Load Card has provision for ten entries (ranges) of data. Only the range columns used should contain data, the other columns should be left blank. Note that the units of the Load Card data are shown to the right of Range 10 column. The sign convention for the slope (So) and parabolic constant (Ko) for a variable depth web is shown in the upper right hand portion of the Span Data form.

1. CODE (c.c. 1-3)

The data in this column is the Load Card Code which is used to identify the type of data that is contained in the card (line).

2. RANGE I (c.c. 4-73) I = 1, 2, ... 10

The data for each range is given in these columns in the associated Load Card; for example, the width of the top plate for range 3 is entered in card columns 18-24 of Load Card 432.

Examples are given on the following pages showing how the Load Card data is entered on the input form, and also examples of the Span Card data. The examples are very informative and should be studied thoroughly before using the program. It should be noted that each example represents data or conditions in one span only.

It should also be noted that the conditions of variation of the cross section must be defined for each span in the continuous unit, but these conditions can vary within each span independently of the conditions of variation in any other span of the continuous unit.

NOTE C: Since the program considers only the cross sections at the exact 1/40th points in the span, abrupt changes of cross section should be avoided at these points. Thus, the R distance for the ranges should be given so that the change in cross section occurs at some point other than an exact 1/40th point in the span.

Note C (continued)

For symmetrical spans or symmetrical continuous units, opposite hand ranges should be consistent (will be if "Repeat Span S" code is used) in order to obtain symmetrical results in the output data.

If a series of related data is defined (i.e., composite slab), all Load Cards in that series must contain some form of data; if nothing else, enter zeros.

BEAM OR WEB

EXAMPLES: WIDE-FLANGE BEAM

1-1. Assume that Span 2 of a continuous unit is 105.5 feet in length and consists of a W36 X 300 wide-flange rolled beam throughout the entire span length.

FORM OF INPUT:

SPAN CARD

	REPEAT SPAN "S"			NUMBER OF RANGES								BEAM TYPE		
1	M	S	4 L ft.	Bm.	T.R.s	B.R.s	CS	PN	PC	WPN	WPC	WF	N	G
3	2		1,0,5.5,0,0	1								1		

		CODE	4 RANGE 1
BEAM OR WEB	RANGE	4,0,0	1,0,5.5,0,0
	WF Bm.	4,0,1	W,3,6,X,3,0,0
NON-STD. BM./WEB	D	4,1,1	
	A	4,1,2	
	I	4,1,3	
GIRDER WEB CONC. OR STEEL	So	4,2,1	
	Ko	4,2,2	
	Do	4,2,3	
	T	4,2,4	
	Xo	4,2,5	

1-2. Consider the following beam as Span 3 of a continuous unit.

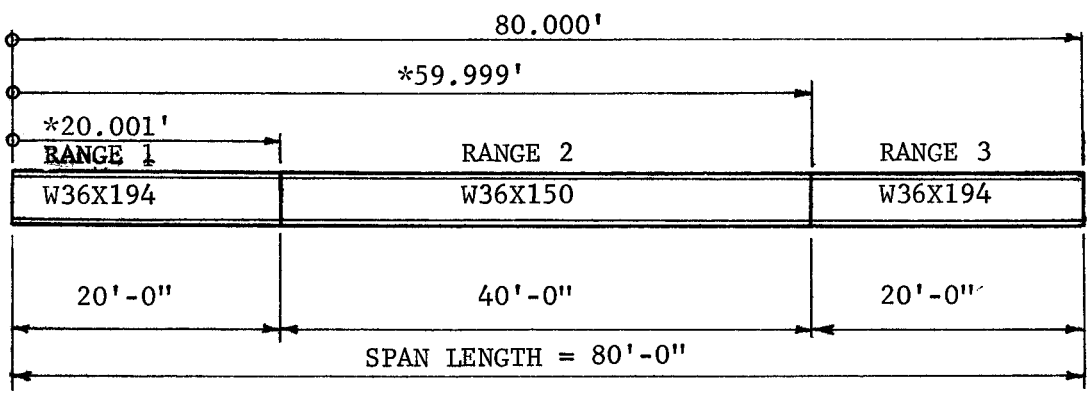

FORM OF INPUT:

SPAN CARD

	REPEAT SPAN "S"			NUMBER OF RANGES								BEAM TYPE		
1	M	S	4 L ft.	Bm.	T.R.s	B.R.s	CS	PN	PC	WPN	WPC	WF	N	G
3	3		80.0	3								1		

	CODE	4 RANGE 1	RANGE 2	8 RANGE 3
RANGE	4,0,0	20.001	59.999	80.0
WF Bm.	4,0,1	W,3,6,X,1,9,4	W,3,6,X,1,5,0	W,3,6,X,1,9,4

Note that Load Cards 411, 412, 413, 421, 422, 423, 424, and 425 are not required in either example and should be left blank. Any cover plates, composite slab, etc., that exist should be entered as shown in later examples.

*See Note C , page 21, 22

BEAM OR WEB (continued)

EXAMPLES: NON-STANDARD BEAM

2-1. Say the beam in Span 1 consists of a W21 X 62 wide-flange beam throughout the entire span (35 ft.). This beam is not stored in the program table of beam properties. Therefore, the properties must be given. See AISC Manual.

FORM OF INPUT:

SPAN CARD

1	M	S	4	L ft.	Bm.	T.R.s	B.R.s	CS	PN	PC	WPN	WPC	WF	N	G
3	1			35.0	1									1	

REPEAT SPAN "S" — NUMBER OF RANGES — BEAM TYPE

		CODE	4 RANGE 1
BEAM OR WEB	RANGE	4,0,0	35.0
	WF Bm.	4,0,1	W X
	NON-STD. BM/WEB D	4,1,1	20.99
	NON-STD. BM/WEB A	4,1,2	18.30
	NON-STD. BM/WEB I	4,1,3	13.30
	GIRDER WEB CONC. OR STEEL S_o	4,2,1	
	GIRDER WEB CONC. OR STEEL K_o	4,2,2	
	GIRDER WEB CONC. OR STEEL D_o	4,2,3	
	GIRDER WEB CONC. OR STEEL T	4,2,4	
	GIRDER WEB CONC. OR STEEL X_o	4,2,5	

2-2. Consider Span 2 (30 ft.) of a reinforced concrete slab bridge. The slab is a constant 20 inches deep let's say. The properties for a one foot strip are:

$$D = \qquad = 20.0 \text{ in.}$$
$$A = 12\ (20) = 240.0 \text{ in.}^2$$
$$I = 12\ (20)^3/12 = 8{,}000.0 \text{ in.}^4$$

FORM OF INPUT:

SPAN CARD

1	M	S	4	L ft.	Bm.	T.R.s	B.R.s	CS	PN	PC	WPN	WPC	WF	N	G
3	2			30.0	1									1	

REPEAT SPAN "S" — NUMBER OF RANGES — BEAM TYPE

		CODE	4 RANGE 1
BEAM OR WEB	RANGE	4,0,0	30.0
	WF Bm.	4,0,1	W X
	NON-STD. BM/WEB D	4,1,1	20.0
	NON-STD. BM/WEB A	4,1,2	240.0
	NON-STD. BM/WEB I	4,1,3	80.0
	GIRDER WEB CONC. OR STEEL S_o	4,2,1	
	GIRDER WEB CONC. OR STEEL K_o	4,2,2	
	GIRDER WEB CONC. OR STEEL D_o	4,2,3	
	GIRDER WEB CONC. OR STEEL T	4,2,4	
	GIRDER WEB CONC. OR STEEL X_o	4,2,5	

The one foot strip of Example 2-2 could be defined as a girder web. See Example 3-1.

Note that Load Cards 401, 421, 422, 423, 424, 425 are not required and should be left blank. Any cover plates, composite slab, etc., that exist should be entered as shown in a later section.

BEAM OR WEB (continued)

The examples of the girder web on the following pages will illustrate several conditions of variation in the depth of the web and the form of the required input data. In all examples the variation of the girder web is given and no attempt is made to illustrate the conditions of variation of the top plates (flanges), bottom plates, composite slab, etc. The latter items are discussed in following sections of this write-up. For the purpose of this problem the web may be considered as the web plate of a plate girder, the stem of a concrete T-Beam or box girder, the slab thickness of a concrete slab bridge, etc.

NOTES:

1. Within any range n, the depth of the web "Dw" at any point Xm feet from the left end of the span "m" is computed by the program from the general parabolic equation:

   $$Dw = Do_n + (Xm-Xo_n)(So_n) + (Xm-Xo_n)^2 (Ko_n)$$

   Do = web depth at origin.
   Xo = distance to origin.

2. The slope (So) at the origin is positive (+) when the tangent tends to increase the depth as Xm increases, and negative (-) when the tangent tends to decrease the depth as Xm increases.

3. The parabolic constant (Ko) is positive (+) when the parabolic offset from the tangent tends to increase the depth, and negative (-) when the offset tends to decrease the depth.

4. When a "Girder" type of beam has been indicated, all related Load Cards (421, 422, 423, 424, 425) must contain some form of input data so that these cards (lines) will be punched. This is also true of the Beam or Web range card (400).

5. Load Cards 401, 411, 412, 413 are not required to define a girder web and should be left blank unless the span also contains a wide-flange section or non-standard beam.

BEAM OR WEB (continued)

EXAMPLES: GIRDER WEB

3-1. CONSTANT DEPTH, CONSTANT THICKNESS

This example is the same as Example 2-2 except that the one foot strip is defined as a girder web.

FORM OF INPUT:

SPAN CARD

1	M	S	4 L ft.	Bm.	T.R.s	B.R.s	CS	PN	PC	WPN	WPC	WF	N	G
3	2	REPEAT SPAN "S"	30.0	1										1

NUMBER OF RANGES (1–5); BEAM TYPE

			CODE	4 RANGE 1
BEAM OR WEB	RANGE		4,0,0	30.0
	WF Bm.		4,0,1	W X
	NON-STD. BM/WEB	D	4,1,1	
		A	4,1,2	
		I	4,1,3	
	GIRDER WEB CONC. OR STEEL	S_o	4,2,1	0 0
		K_o	4,2,2	0 0
		D_o	4,2,3	20.0
		T	4,2,4	120.0
		X_o	4,2,5	0 0

3-2. CONSTANT DEPTH, VARIABLE THICKNESS

Consider Span 2 in a continuous plate girder in which the web plate varies as shown below.

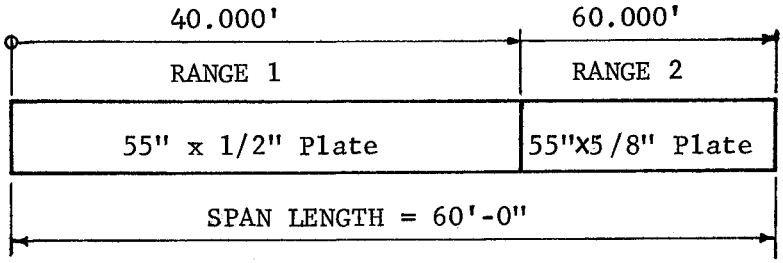

FORM OF INPUT:

SPAN CARD

1	M	S	4 L ft.	Bm.	T.R.s	B.R.s	CS	PN	PC	WPN	WPC	WF	N	G
3	2	REPEAT SPAN "S"	60.0	2										1

NUMBER OF RANGES (1–5); BEAM TYPE

			CODE	4 RANGE 1	RANGE 2
BEAM OR WEB	RANGE		4,0,0	40.0	60.0
	WF Bm.		4,0,1	W X	W X
	NON-STD. BM/WEB	D	4,1,1		
		A	4,1,2		
		I	4,1,3		
	GIRDER WEB CONC. OR STEEL	S_o	4,2,1	0 0	0 0
		K_o	4,2,2	0 0	0 0
		D_o	4,2,3	55.0	55.0
		T	4,2,4	0.500	0.625
		X_o	4,2,5	0 0	40 0

BEAM OR WEB (continued)

3-3. CONSTANT THICKNESS, LINEAL VARIATION IN DEPTH

The girder web shown below can be defined with only one range. Use the left end of the span as the origin.

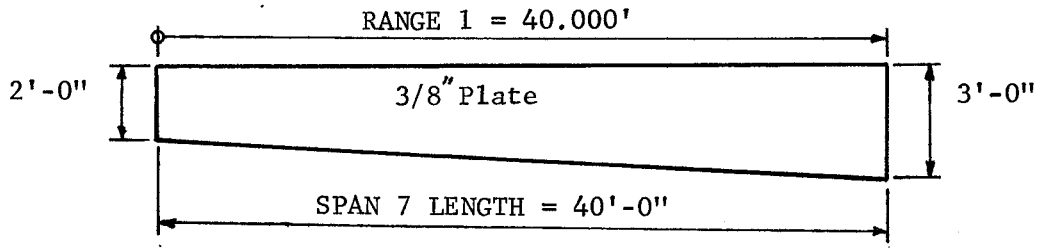

FORM OF INPUT:

So = 12"/40' = 0.30 in./ft.

SPAN CARD

1	M	S	4 L ft.	Bm.	T.R.s	B.R.s	CS	PN	PC	WPN	WPC	WF	N	G
3	7		40.0	1										1

REPEAT SPAN "S" — 6 NUMBER OF RANGES — 35 BEAM TYPE

			CODE	4 RANGE 1
BEAM OR WEB	RANGE		4,0,0	40.0
	WF Bm.		4,0,1	W X
	NON-STD. BM./WEB	D	4,1,1	
		A	4,1,2	
		I	4,1,3	
	GIRDER WEB CONC. OR STEEL	So	4,2,1	0.30
		Ko	4,2,2	0
		Do	4,2,3	240.0
		T	4,2,4	0.375
		Xo	4,2,5	0

The girder web could also be defined with the origin at the right end of the span. Only the depth and distance to origin change as shown below.

FORM OF INPUT:

			CODE	4 RANGE 1
BEAM OR WEB	RANGE		4,0,0	40.0
	WF Bm.		4,0,1	W X
	NON-STD. BM./WEB	D	4,1,1	
		A	4,1,2	
		I	4,1,3	
	GIRDER WEB CONC. OR STEEL	So	4,2,1	0.30
		Ko	4,2,2	0
		Do	4,2,3	360.0
		T	4,2,4	0.375
		Xo	4,2,5	40.0

BEAM OR WEB (continued)

3-4. CONSTANT THICKNESS, STRAIGHT HAUNCH

The girder web shown below must be defined with 2 ranges. Range 1 (0 to 40') has constant depth. The origin for range 2 (40' to 60') can be positioned at 40 feet from the left end of the span. In this case: Do_2 = 30" and So_2 = 15"/20' = 0.75 in./ft.

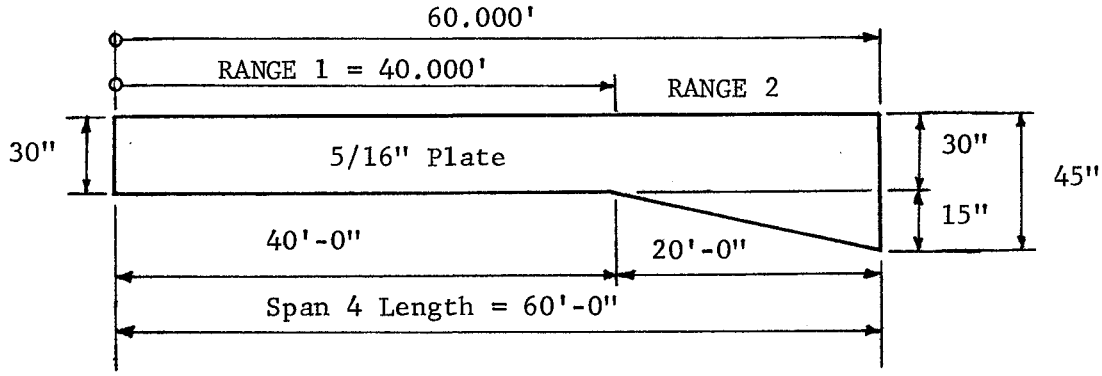

FORM OF INPUT:

SPAN CARD

1	M	S	4	L ft.	Bm.	T.R.s	B.R.s	CS	PN	PC	WPN	WPC	WF	N	G
3	4			60.0	2										1

REPEAT SPAN "S"

NUMBER OF RANGES (1 to 5)

BEAM TYPE

Note that the position of the decimal has been changed so that the exact thickness could be entered.

			CODE	4 RANGE 1	1 RANGE 2
BEAM OR WEB	RANGE		4,0,0	40.0	60.0
	WF Bm.		4,0,1	W X	W X
	NON-STD. BM/WEB	D	4,1,1		
		A	4,1,2		
		I	4,1,3		
	GIRDER WEB CONC. OR STEEL	S_o	4,2,1	0 0	0.75 0
		K_o	4,2,2	0 0	0 0
		D_o	4,2,3	30 0	30 0
		T	4,2,4	3.125	3.125
		X_o	4,2,5	0 0	40 0

The origin of range 1 can be placed at 40' and the origin of range 2 can be positioned at the right end of the span. This is shown as follows.

FORM OF INPUT:

			CODE	4 RANGE 1	1 RANGE 2
BEAM OR WEB	RANGE		4,0,0	40.0	60.0
	WF Bm.		4,0,1	W X	W X
	NON-STD. BM/WEB	D	4,1,1		
		A	4,1,2		
		I	4,1,3		
	GIRDER WEB CONC. OR STEEL	S_o	4,2,1	0 0	0.75 0
		K_o	4,2,2	0 0	0 0
		D_o	4,2,3	30 0	45.0 0
		T	4,2,4	3.125	3.125
		X_o	4,2,5	40 0	60 0

BEAM OR WEB (continued)

3-5. CONSTANT THICKNESS, STRAIGHT HAUNCH

The girder web in this example must be defined with two ranges. Range 2 (15' to 40') has constant depth. The origin of range 1 is taken at the left end of the span. Note the negative value for the slope (So).

So_1 = -10"/15' = -0.666667 in./ft.

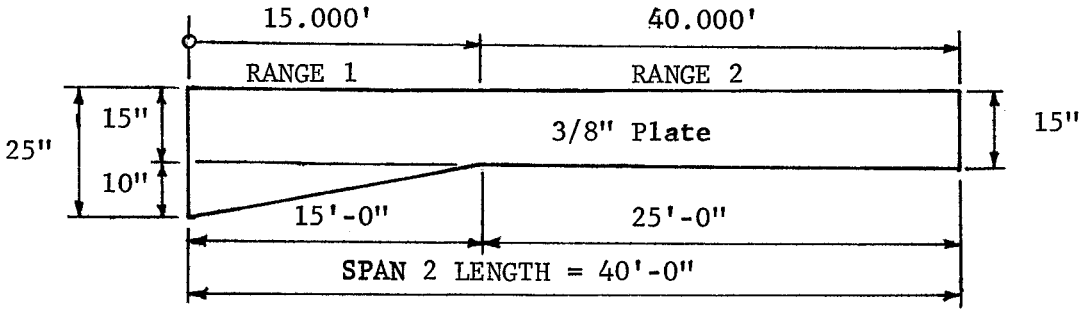

FORM OF INPUT:

SPAN CARD

1	M	S	4 L ft.	Bm.	T.R.s	B.R.s	CS	PN	PC	WPN	WPC	WF	N	G
3	2		40.0	2										1

REPEAT SPAN "S" — NUMBER OF RANGES — BEAM TYPE

			CODE	4 RANGE 1	RANGE 2
BEAM OR WEB	RANGE		4,0,0	15.0 0	40.0 0
	WF Bm		4,0,1	W X	W X
	NON-STD. BM/WEB	D	4,1,1		
		A	4,1,2		
		I	4,1,3		
	GIRDER WEB CONC. OR STEEL	So	4,2,1	-0.666667	0. 0
		Ko	4,2,2	0. 0	0. 0
		Do	4,2,3	25.0 0	15.0 0
		T	4,2,4	0.375	0.375
		Xo	4,2,5	0. 0	15.0 0

The origin of range 1 could have been set at 15' from the left end of the span. Range 2 could also be defined with the origin at the right end of the span. This is shown below.

FORM OF INPUT:

			CODE	4 RANGE 1	RANGE 2
BEAM OR WEB	RANGE		4,0,0	15.0 0	40.0 0
	WF Bm		4,0,1	W X	W X
	NON-STD. BM/WEB	D	4,1,1		
		A	4,1,2		
		I	4,1,3		
	GIRDER WEB CONC. OR STEEL	So	4,2,1	-0.666667	0. 0
		Ko	4,2,2	0. 0	0. 0
		Do	4,2,3	15.0 0	15.0 0
		T	4,2,4	0.375	0.375
		Xo	4,2,5	15.0 0	40.0 0

BEAM OR WEB (continued)

3-6. STRAIGHT HAUNCHES, VARIABLE THICKNESS

The girder web shown below requires five ranges to define the variation in depth and web thickness throughout the span.

So_2 = -45"/20' = -2.25 in./ft., So_4 = 30"/16' = 1.875 in./ft.

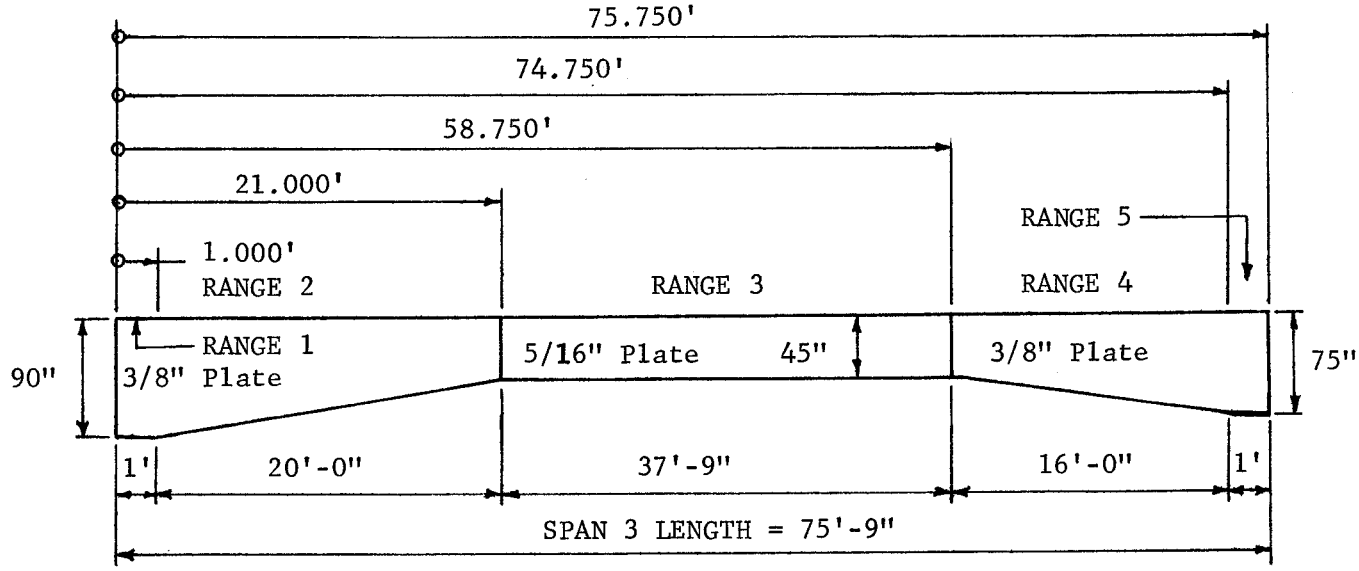

FORM OF INPUT:

SPAN CARD

1	M	S (REPEAT SPAN "S")	4 L ft.	NUMBER OF RANGES (10) Bm.	T.R.s	B.R.s	CS	PN	PC	WPN	WPC	BEAM TYPE (25) WF	N	G
3	3		75.750	5										1

		CODE	4 RANGE 1	1 RANGE 2	1/8 RANGE 3	2/5 RANGE 4	3/2 RANGE 5
BEAM OR WEB	RANGE	4,0,0	1.0	21.0	58.750	74.750	75.750
	WF Bm.	4,0,1	W X	W X	W X	W X	W X
	NON-STD. BM/WEB D	4,1,1	•	•	•	•	•
	NON-STD. BM/WEB A	4,1,2	•	•	•	•	•
	NON-STD. BM/WEB I	4,1,3	•	•	•	•	•
	GIRDER WEB CONC. OR STEEL So	4,2,1	0 0	-2.250 0	0 0	1.8750 0	0 0
	GIRDER WEB CONC. OR STEEL Ko	4,2,2	0 0	0 0	0 0	0 0	0 0
	GIRDER WEB CONC. OR STEEL Do	4,2,3	90 0	90 0	45 0	45 0	75 0
	GIRDER WEB CONC. OR STEEL T	4,2,4	0.375	0.375	0.3125	0.375	0.375
	GIRDER WEB CONC. OR STEEL Xo	4,2,5	0 0	1.0	21.0	58.750	74.750

BEAM OR WEB (continued)

3-7. PARABOLIC HAUNCH

The web in this example will require two ranges to define the variation in depth throughout the span. It will be most convenient to place the origin of the second range at the point where the tangent slope is equal to zero. The parabolic constant is computed as:

$$Ko_2 = 15''/(20\ ft.)^2 = 0.0375\ in./ft.^2$$

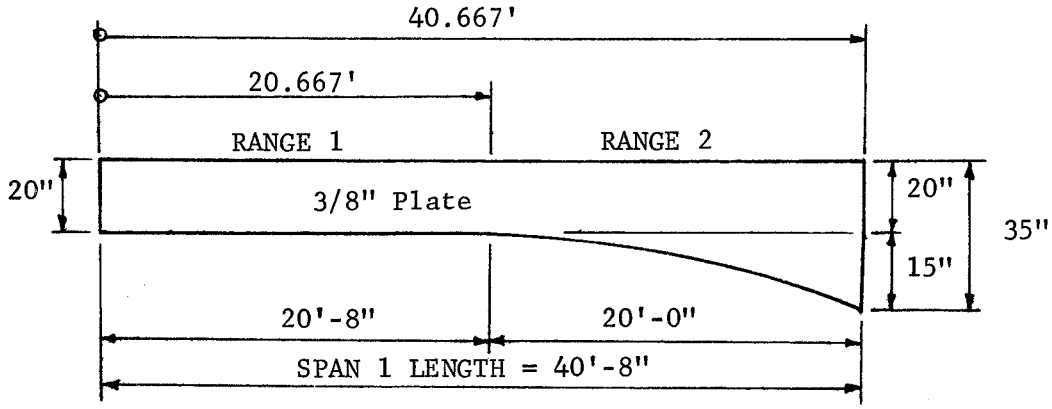

FORM OF INPUT:

SPAN CARD

	REPEAT SPAN "S"			NUMBER OF RANGES								BEAM TYPE		
1	M	S	4 L ft.	Bm.	T.R.s	B.R.s	CS	PN	PC	WPN	WPC	WF	N	G
3	1		40.667	2										1

			CODE	4 RANGE 1	4 RANGE 2
BEAM OR WEB	RANGE		4,0,0	20.667	40.667
	WF Bm.		4,0,1	W X	W X
	NON-STD. BM/WEB	D	4,1,1	•	•
		A	4,1,2	•	•
		I	4,1,3	•	•
	GIRDER WEB CONC. OR STEEL	So	4,2,1	0 0	0 0
		Ko	4,2,2	0 0	0.0375 0
		Do	4,2,3	20 0	20 0
		T	4,2,4	0.375	0.375
		Xo	4,2,5	0 0	20.667

Note that range 2 could also be defined by placing the origin of the equation for the depth at the right end of the span. However, in this case the slope of the tangent at the origin must also be computed, thus making the form of the input more inconvenient than the form shown above.

BEAM OR WEB (continued)

3-8. PARABOLIC HAUNCH

The following web requires two ranges. The origin for the parabolic variation in depth should be taken at the point where the slope of the tangent is equal to zero, i.e., at 27.5 feet from the left end of the span. The parabolic constant is computed as:

$$Ko_1 = 21/(27.5)^2 = 0.0277686 \text{ in./ft.}^2$$

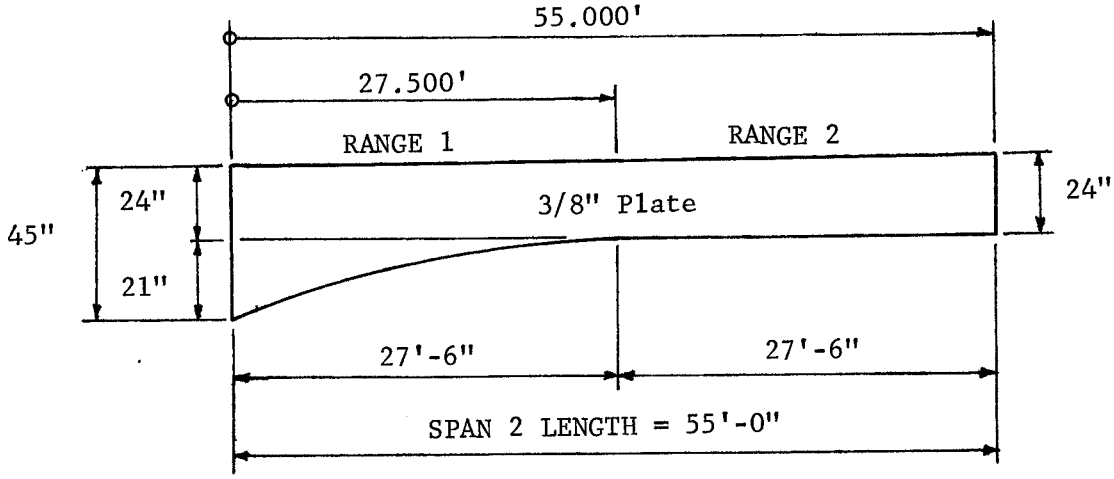

FORM OF INPUT:

SPAN CARD

1	M	S	4 L ft.	10 NUMBER OF RANGES Bm.	T.R.s	B.R.s	CS	PN	PC	WPN	WPC	25 BEAM TYPE WF	N	G
3	2		55.0 0	2										1

(REPEAT SPAN "S")

			CODE	4 RANGE 1	1 RANGE 2
BEAM OR WEB	RANGE		4,0,0	27500	55.0 0
	WF Bm		4,0,1	W X	W X
	NON-STD. BM/WEB	D	4,1,1	•	•
		A	4,1,2	•	•
		I	4,1,3	•	•
	GIRDER WEB CONC. OR STEEL	So	4,2,1	0 0	0 0
		Ko	4,2,2	.027769	0 0
		Do	4,2,3	24000	24000
		T	4,2,4	0375	0375
		Xo	4,2,5	27500	27500

3-9. PARABOLIC HAUNCHES

The span in this example is symmetrical and the intrados curve is continuous throughout the entire length of the span. Therefore, the variation of the girder depth can be defined with one range only. The origin of the equation is taken at mid-span for convenience. The parabolic constant is equal to:

$$Ko_1 = 12''/(30.0')^2 = 0.0133333 \text{ in./ft.}^2$$

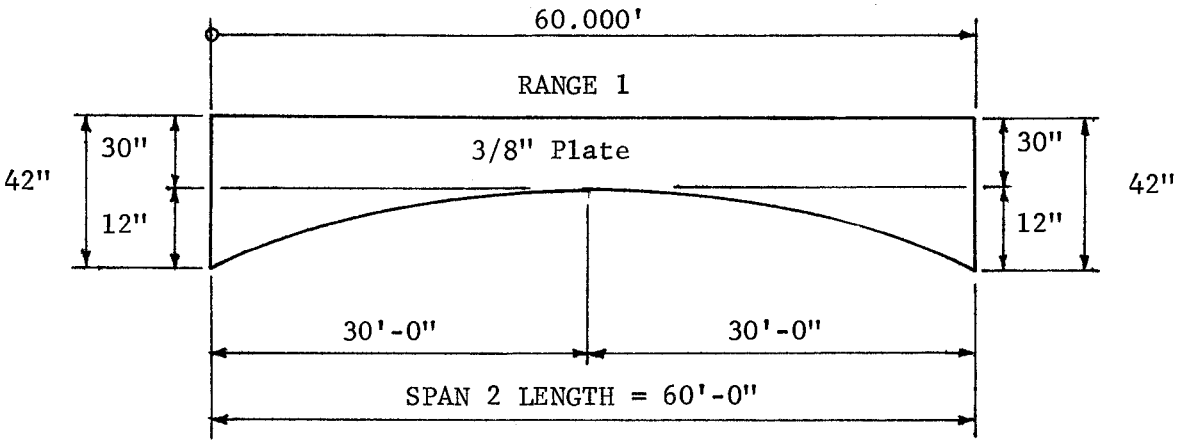

FORM OF INPUT:

SPAN CARD

1	M	S	4 L ft.	Bm.	T.R.s	B.R.s	CS	PN	PC	WPN	WPC	WF	N	G
3	2		60.0	1										1

REPEAT SPAN "S"

1 NUMBER OF RANGES 2

BEAM TYPE

			CODE	4 RANGE 1
BEAM OR WEB	RANGE		4,0,0	60.0
	WF Bm.		4,0,1	W X
	NON-STD. BM./WEB	D	4,1,1	
		A	4,1,2	
		I	4,1,3	
	GIRDER WEB CONC. OR STEEL	S_o	4,2,1	0.0
		K_o	4,2,2	.0133333
		D_o	4,2,3	30.0
		T	4,2,4	0.375
		X_o	4,2,5	30.0

BEAM OR WEB (continued)

3-10. COMPLEX WEB DEPTH

The web in this example requires seven ranges to define the variation in depth. It will again be convenient to take the origin of each range for which the variation is parabolic at the point where the tangent is equal to zero.

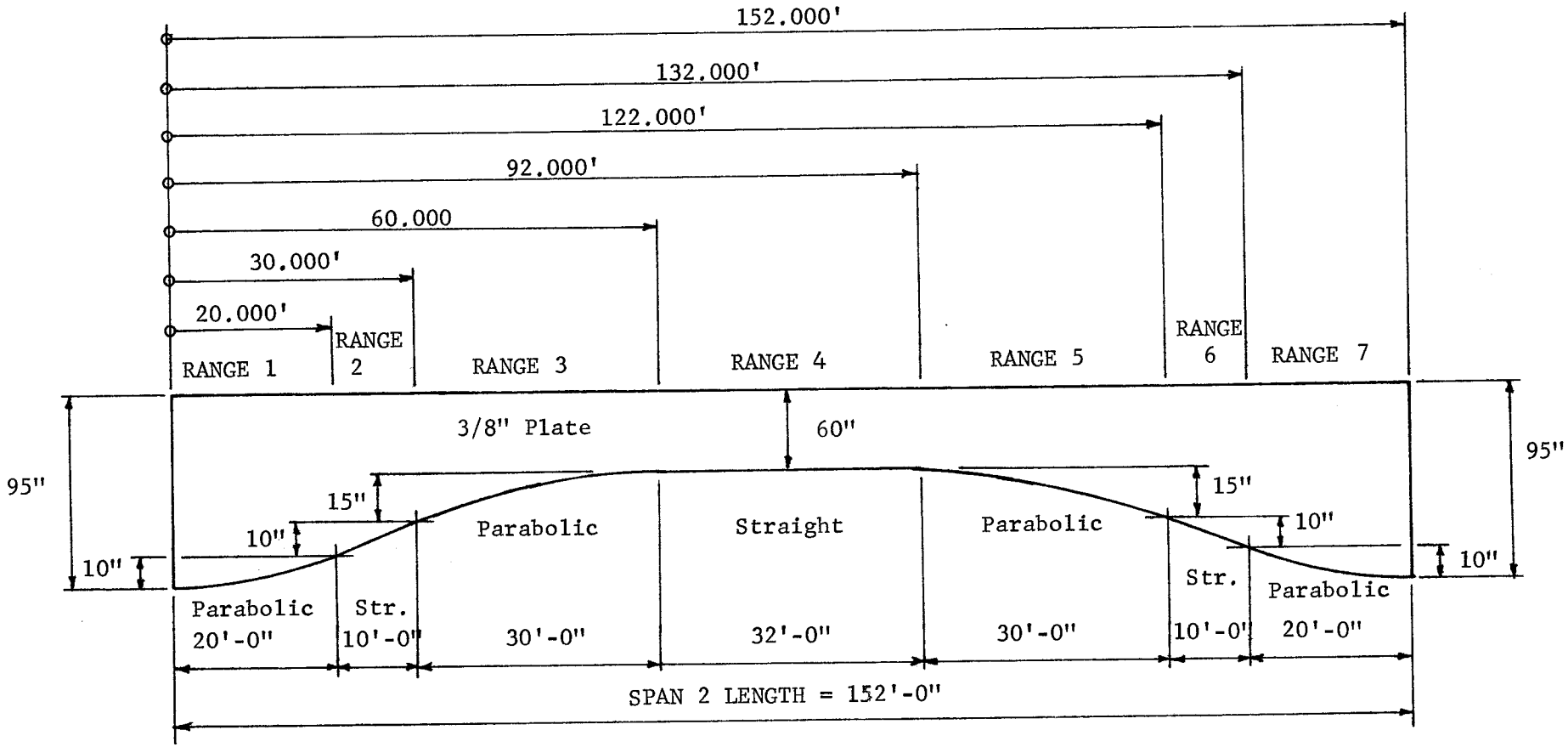

The form of the input data is shown on the following page.

BEAM OR WEB (continued)

3-10. (continued)

For Range 1 and Range 7: $K_o = -10''/(20')^2 = -0.025$ in./ft.^{2}
$S_o = 0.0$

For Range 2: $S_o = -10''/10' = -1.0$ in./ft., $K_o = 0.0$

For Range 3 and Range 5: $K_o = 15''/(30')^2 = 0.0166667$ in./ft.^{2}
$S_o = 0.0$

For Range 6: $S_o = 10''/10' = 1.0$ in./ft., $K_o = 0.0$

FORM OF INPUT:

SPAN CARD

1	M	S	4	L ft.	10	Bm.	T.R.s	B.R.s	CS	PN	PC	WPN	WPC	25	WF	N	G
		REPEAT SPAN "S"			NUMBER OF RANGES									BEAM TYPE			
3	2			1520		7											1

		CODE	4 RANGE 1	1 RANGE 2	18 RANGE 3	25 RANGE 4	32 RANGE 5	39 RANGE 6	46 RANGE 7
BEAM OR WEB	RANGE	4,0,0	20.0	30.0	60.0	92.0	122.0	132.0	152.0
	WF Bm.	4,0,1	W X	W X	W X	W X	W X	W X	W X
	NON-STD. BM/WEB D	4,1,1							
	NON-STD. BM/WEB A	4,1,2							
	NON-STD. BM/WEB I	4,1,3							
	GIRDER WEB CONC. OR STEEL S_o	4,2,1	0. 0	-1.0 0	0. 0	0. 0	0. 0	1.0 0	0. 0
	GIRDER WEB CONC. OR STEEL K_o	4,2,2	-0.02500	0. 0	.016667	0. 0	.016667	0. 0	-0.02500
	GIRDER WEB CONC. OR STEEL D_o	4,2,3	95.000	85.0 0	60.0 0	60.0 0	60.0 0	75.0 0	95.0 0
	GIRDER WEB CONC. OR STEEL T	4,2,4	0.375	0.375	0.375	0.375	0.375	0.375	0.375
	GIRDER WEB CONC. OR STEEL X_o	4,2,5	0. 0	20. 0	60. 0	60. 0	92.0 0	122.0 0	152.0 0

BEAM OR WEB (continued)

3-11. GIRDER WEB AND WIDE-FLANGE BEAM

This example shows a span that consists of a wide-flange beam and plate girder. This practice is becoming rather common. A sketch of the span is shown below along with the input data. Note that the plate girder flange plates would be defined as top and bottom plates as discussed later.

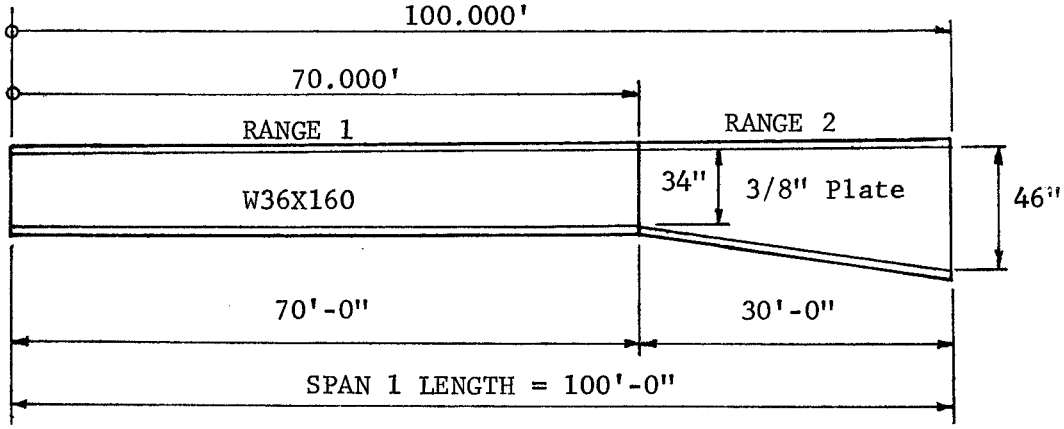

FORM OF INPUT: So_2 = 12"/30' = 0.40 in./ft.

SPAN CARD

1	M	S	4 L ft.	6 NUMBER OF RANGES Bm.	T.R.s	B.R.s	CS	PN	PC	WPN	WPC	3 BEAM TYPE WF	N	G
3	1		100.0	2								1		1

(REPEAT SPAN "S")

			CODE	4 RANGE 1	1 RANGE 2
BEAM OR WEB	RANGE		4,0,0	70.0	10.0
	WF Bm.		4,0,1	W36X160	W X
	NON-STD. BM./WEB	D	4,1,1		
		A	4,1,2		
		I	4,1,3		
	GIRDER WEB CONC. OR STEEL	S_o	4,2,1		0.40
		K_o	4,2,2		0
		D_o	4,2,3		34.0
		T	4,2,4		0.375
		X_o	4,2,5		70

TOP PLATES

The examples given on the following pages will illustrate several conditions of variation in the top plates, and the manner in which the input is entered on the input data form. In all examples the figures represent the variation in the top plates and no attempt is made to illustrate the variation of the beam or web. This was done in the preceding examples (Beam or Web). For the purpose of this problem, the top plate is considered as a flange plate of a plate girder, cover plate for a wide-flange or non-standard beam, concrete slab for a concrete T-Beam or box girder, deck plate for a steel box girder, etc. A composite concrete slab for a steel beam should never be defined as a top plate. The input form has Load Cards for such a slab. If no top plate exists, leave the Top Plate Load Cards (431, 432, 433) blank.

NOTE: The width or thickness of the top plate (or bottom plate) cannot vary within a range, i.e., a tapered plate is not allowed. A reasonably accurate simulation of a tapered plate can be defined by dividing the plate into several ranges of constant plate segments where the size of the plate in each segment is increasingly larger or smaller according to the taper rate.

EXAMPLES: TOP PLATES

The flange of a rolled beam is not considered a top plate. It is included as part of the "Web".

4-1.

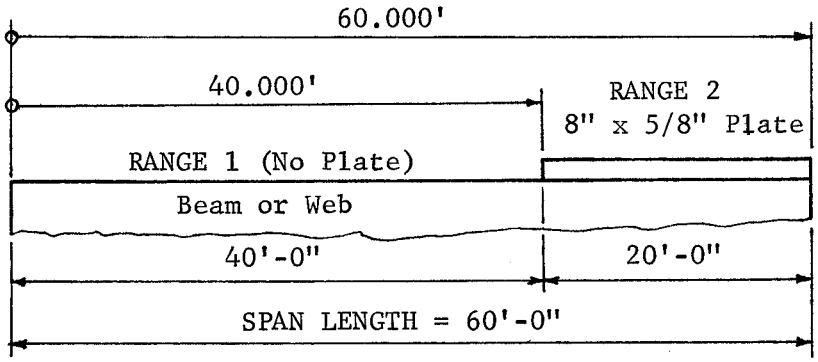

FORM OF INPUT:

NUMBER OF RANGES							
Bm.	T.Rs	B.Rs	CS	PN	PC	WPN	WPC
	2						

TOP PLATES	R	4,3,1	40.0	60.0
	W	4,3,2	0.0	8.0
	T	4,3,3	0.0	.0625

TOP PLATES (continued)

4-2.

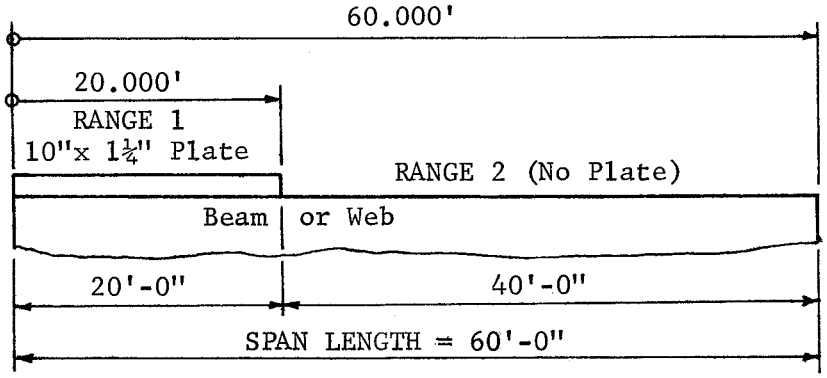

FORM OF INPUT:

NUMBER OF RANGES							
Bm.	T.Rs	B.Rs	CS	PN	PC	WPN	WPC
	2						

TOP PLATES	R	4,3,1	20.0	60.0
	W	4,3,2	10.0	0.0
	T	4,3,3	1.250	0.0

4-3.

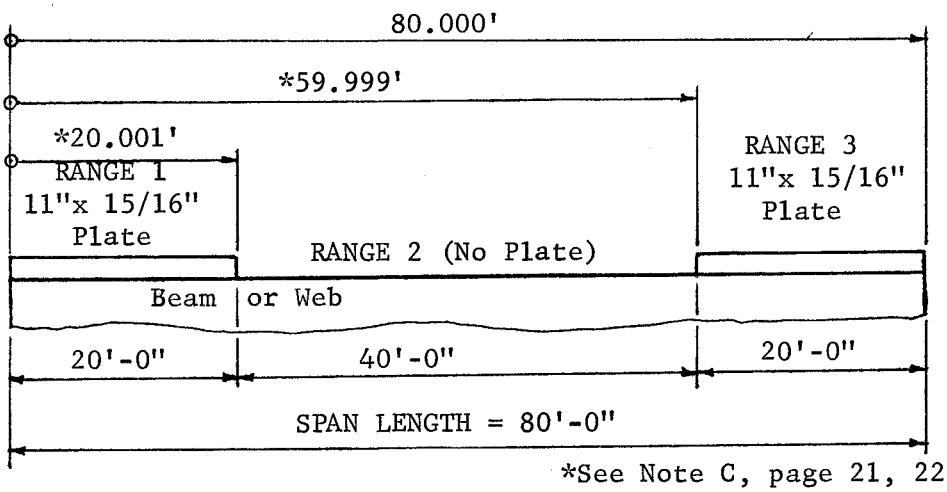

*See Note C, page 21, 22.

FORM OF INPUT:

NUMBER OF RANGES							
Bm.	T.Rs	B.Rs	CS	PN	PC	WPN	WPC
	3						

TOP PLATES	R	4,3,1	20.001	59.999	80.0
	W	4,3,2	11.0	0.0	11.0
	T	4,3,3	0.9375	0.0	0.9375

TOP PLATES (continued)

4-4. T-Beam

Consider a 61'-6" span from a continuous concrete T-Beam. In addition to the web (stem) the flange must be defined also. This is conveniently done by considering the slab above the stem as a Top Plate. Assume the beams are spaced at 5'-0" center to center and the thickness of the slab is 6 inches. Then the width of the slab (top plate) is 60 inches. Also assume the slab is constant throughout the span. Then only one range will be required to define the top plate (slab).

FORM OF INPUT:

1	NUMBER OF RANGES						25
Bm.	T.Rs	B.Rs	CS	PN	Pc	WPN	WPC
	1						

TOP PLATES	R	4,3,1	61.500
	W	4,3,2	60.0
	T	4,3,3	6.0

TOP PLATES (continued)

4-5.

This example shows a complex top plate variation which requires several ranges to define. A sketch and the input data are shown below.

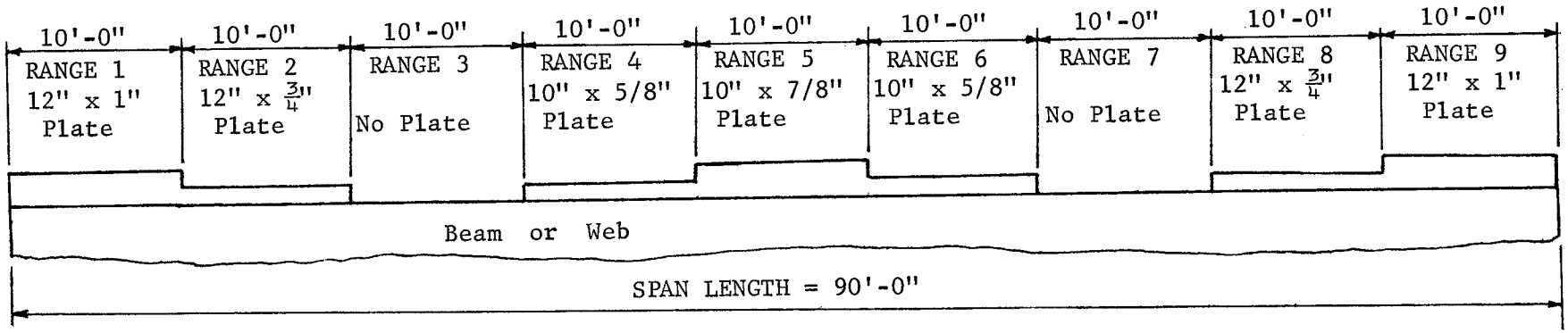

FORM OF INPUT:

NUMBER OF RANGES							
Bm.	T.R.s	B.R.s	CS	PN	PC	WPN	WPC
	9						

TOP PLATES	R	4,3,1	10.0	20.0	30.0	40.0	50.0	60.0	70.0	80.0	90.0	
	W	4,3,2	12.0	12.0	0.0	1.0	1.0	1.0	0.0	12.0	12.0	
	T	4,3,3	1.0	0.750	0.0	0.625	0.875	0.625	0.0	0.750	1.0	

TOP PLATES (continued)

4-6. BUILT-UP FLANGES

THIS EXAMPLE ILLUSTRATES THE MANNER IN WHICH THE INPUT IS GIVEN IN THE CASES WHERE THE FLANGES OF THE BEAM ARE NOT RECTANGULAR IN SHAPE.

Consider the top flange of a riveted plate girder as shown on the next page. Since the program always assumes that the top plate is rectangular in shape and rests directly on top of the web (the corresponding assumption is also made for the bottom plates), the actual shape of the flange must be reduced to an equivalent plate and given as such in the input.

The first step is to select a reference line throughout the entire length of the beam to divide the area of the cross section into the part that is to be considered as the web and the part that is to be considered as the flange. In this example say that this line is chosen 2 inches above the toe of the vertical legs of the flange angles. Then the web dimensions to be defined are the dimensions between this line and a similar line chosen accordingly for the bottom plates. The web properties shall then be given in one of the forms previously explained.

The next step is to compute the equivalent flange plate. For this purpose the area of the actual web which lies above the reference line, as well as the area of the flange angles which lies below the reference line, shall be considered as part of the flange area. The object of the computation is to find an equivalent plate which has the same area as the flange and the thickness is such that the centroid of the equivalent plate coincides with the centroid of the actual flange area. That is, the thickness of the equivalent plate shall be equal to twice the distance from the reference line to the centroid of the flange area.

It should be noted that when the above criteria are used, the only error that will result will be in the computation of the moment of inertia of the flange about its own centroid. However, this error will be small, and since the moment of inertia of the flange about its own centroid is very small in comparison to the total moment of inertia of the cross section, the effect of using the equivalent flange plate instead of the actual flange will be negligible in the final answer to the problem. Note also that the reference line can be chosen so that the resulting error is negligible in itself.

The computations for the actual example are shown on the next page and are self-explanatory.

TOP PLATES (continued)

4-6. BUILT-UP FLANGES (continued - see discussion on the preceding page)

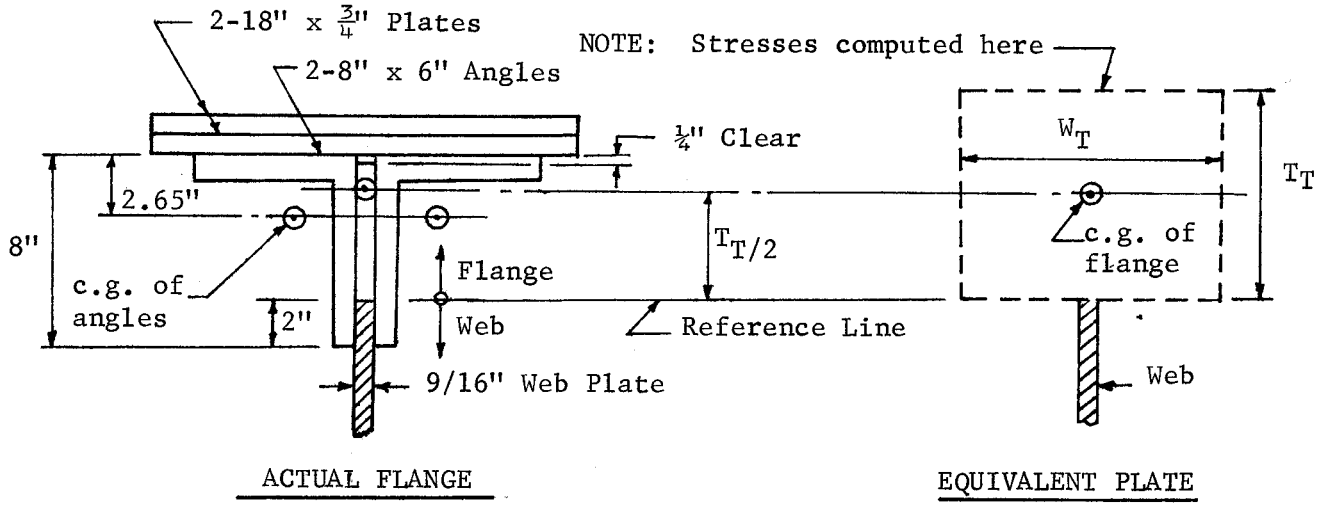

COMPUTATION FOR THE EQUIVALENT PLATE:

			A		y		$M_{R.L.}$
2 plates	:	18 x 3/4	: 27.00	x	6.75	=	182.25
2 angles*	:	8 x 6 x 1	: 26.00	x	3.35	=	87.10
1 plate	:	5 3/4 x 9/16	: 3.23	x	2.875	=	9.30
		A_T	= 56.23 in.^{2}				278.65 in.^{3}

$$\frac{T_T}{2} = \frac{278.65}{56.23} = 4.956 \text{ in.}$$

$$T_T = 9.912 \text{ in.}$$

$$W_T = \frac{56.23}{9.912} = 5.673 \text{ in.}$$

*See A.I.S.C. Steel Manual.

Thus, the input for the top flange shown above must be entered in the input data form as follows:

TOP PLATES	R	4,3,1	XXXXX
	W	4,3,2	5673
	T	4,3,3	9912

NOTE:

In some cases the centroid of the flange area may be below the reference line, in which case the reference thickness of the equivalent plate must be entered as a negative quantity. This is accepted by the program and the resulting moment of inertia will be correct. In this case the width must also be given as a negative quantity.

TOP PLATES (continued)

ADDITIONAL NOTES:

When entering an equivalent plate to represent a built-up section as shown on the preceding pages, it is suggested that a check be made on the moment of inertia of the "Top Plate" (and Bottom Plate) about its own centroid ($W_T T_T^3/12$) compared to the moment of inertia of the total section - the bottom plate included- to determine if the error is insignificant. This check need only be done for large values of T_T.

When using an equivalent plate as shown on the preceding pages, the output stresses in the extreme top fiber will be in error. This is due to the fact that the stresses are computed at the extreme fiber, i.e., top of top plate, see sketch on preceding page. The stresses at the actual top (and bottom) of the beam may easily be computed from the output stresses by using the "lineal variation of stress" theory.

As an alternate to the "equivalent plate" method shown on the preceding pages it is suggested where possible to include the built-up section as part of the "web". This can easily be done if the section is symmetrical and the depth of the web does not vary. Using this approach the properties of the total section are computed by the designer and entered as a "Non-standard beam". Also the topmost (and bottom-most) plates may be entered separately as "Top Plates" and "Bottom Plates" to facilitate in filling in the input data when these plates vary. Note that the output stresses in the top (and bottom) fibers of the steel beam will then be correct.

BOTTOM PLATES

No examples are given since the form of input for bottom plates is the same as the form of input for top plates, except for the Load Card Codes. The plates illustrated in examples 4-1 to 4-6 can be used as examples of bottom plates by considering the figures to be turned upside down. The form of the input can then be illustrated by substituting the Bottom Plate Load Cards (441, 442, 443) for the Top Plate Load Cards (431, 432, 433). In addition the number of ranges should be entered in the appropriate column for number of bottom plate ranges in the Span Card.

TOP AND BOTTOM PLATES - General Comments.

The program will recognize any one of four combinations of top and bottom plates in any span.

1. NO TOP PLATES AND NO BOTTOM PLATES:

   In this case the Load Cards for the top and bottom plates are left blank and the number of ranges given as zero.

2. TOP PLATES AND NO BOTTOM PLATES:

   In which case the Top Plate Load Cards are filled in, and the Bottom Plate Load Cards are left blank.

3. BOTTOM PLATES AND NO TOP PLATES:

   This condition requires that the Bottom Plate Load Cards be filled in, and the Top Plate Load Cards be left blank.

4. TOP PLATES AND BOTTOM PLATES:

   In this case both the Top Plate and Bottom Plate Load Cards must be filled in. It should be noted that in this case the variation in the bottom plates is completely independent of the variation in the top plates, and vice versa.

COMPOSITE SLAB

Composite concrete sections can be used with any of the types of steel cross sections which have been discussed on the preceding pages. Thus, in addition to the dimensions of the composite slab shown in the following examples, the input data for the span must also include the load cards that define the steel cross section in one of the forms previously discussed.

The input quantities and the loads given for the analysis of a composite continuous beam must be consistent with the assumptions made in the design. For example, if the spans are not shored during construction, the dead loads from the weight of the beam and the slab will act on the non-composite steel section, but if the spans are shored during construction these loads will act on the composite concrete and steel section.

A continuous composite beam is analyzed three separate times (automatically) by the program as follows:

1. Analysis of non-composite dead loads.

   This analysis is made by using the properties of the steel section only (non-composite) and setting all composite dead loads and live loads equal to zero, i.e., ignoring them. In this analysis the program will compute the effects due to the weight of the beam, non-composite uniform dead load (WDLnc), non-composite P-loads, and non-composite partial uniform dead load.

2. Analysis of the composite dead loads.

   This analysis is made assuming a modular ratio equal to 3N (three times normal value of N) to compute the transformed area of the composite concrete slab in order to compute the long term effect (creep in the concrete) due to the composite dead loads. All live loads and non-composite dead loads are automatically ignored by the program in this analysis. During this analysis the program computes the effects due to the composite uniform dead load (WDLc), composite P-loads and composite partial uniform dead load only.

3. Analysis of the composite live loads.

   This analysis is made assuming a modular ratio of N to compute the transformed area of the composite concrete slab in order to compute the short term effect due to the composite live loads. All dead loads are ignored and the only loads considered by the program are the highway and sidewalk live loads.

COMPOSITE SLAB (continued)

In the analysis of composite beams, the program always assumes that the weight of the beam consists only of the weight of the steel section. That is, the weight of the transformed concrete is not included as part of the weight of the beam. Therefore, if the initial dead loads are assumed to act on the non-composite section, the weight of the beam material given in the input as "W_G" shall be the unit weight of steel, and the weight of the portion of the concrete slab acting on the beam shall be included in the uniformly distributed dead load "WDLnc".

In general, the user should keep in mind that the dimensions of the composite concrete slab given in the input are used by the program to compute the moments of inertia of the composite sections throughout the beam, and that these properties are the values used to compute the elastic properties of the spans in the continuous unit and stresses at the various sections.

The examples given on the following pages illustrate how the composite concrete slab is entered on the input data sheet. No attempt is made to define the variation of the steel cross section (see earlier discussions), nor to define the loads acting on the beam.

Note: When defining a composite slab, always enter data (zeros if nothing else) in the reinforcing steel Load Card (455).

COMPOSITE SLAB (continued)

5-1. COMPOSITE WELDED PLATE GIRDER

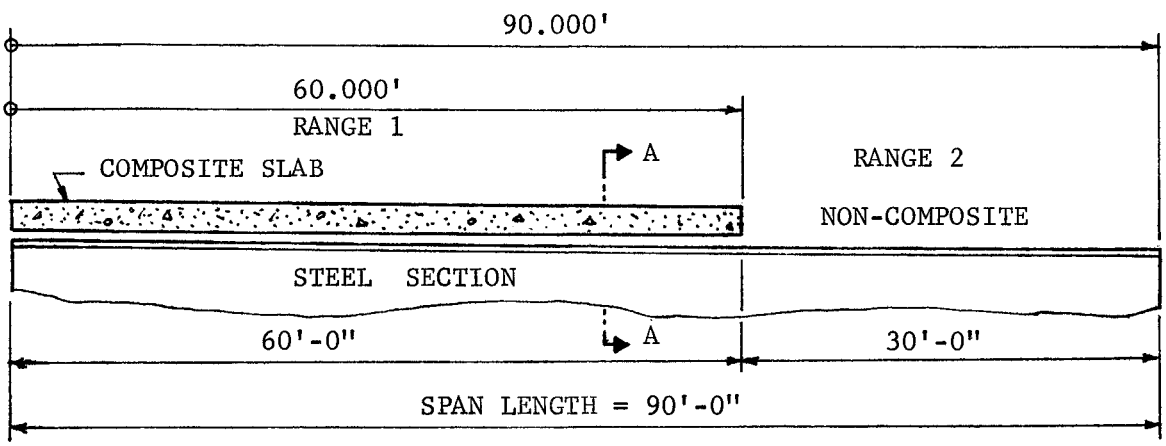

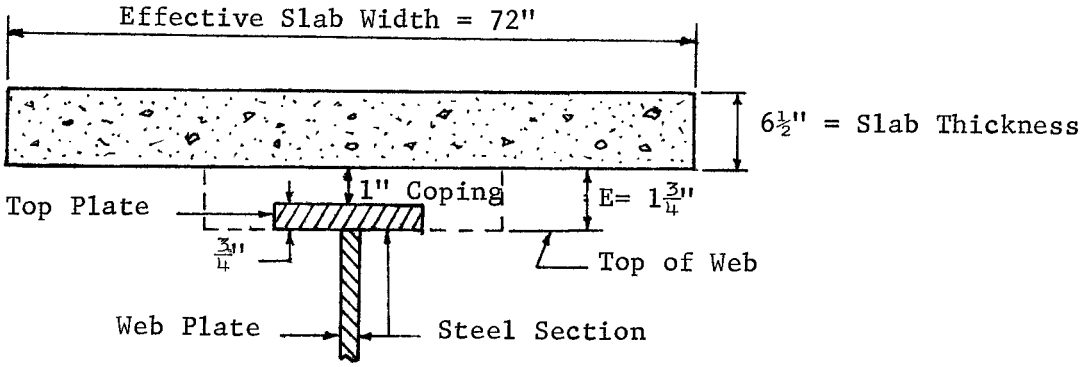

SECTION A-A
No Scale

FORM OF INPUT:

NUMBER OF RANGES							
Bm.	T.R.s	B.R.s	CS	PN	PC	WPN	WPC
			2				

COMPOSITE SLAB	R	4,5,1	60.0	90.0
	W	4,5,2	720.0	0.0
	T	4,5,3	6.500	0.0
	e	4,5,4	1.750	0.0
	As	4,5,5	0.0	0.0

COMPOSITE SLAB (continued)

5-2. COMPOSITE WIDE FLANGE-BEAM

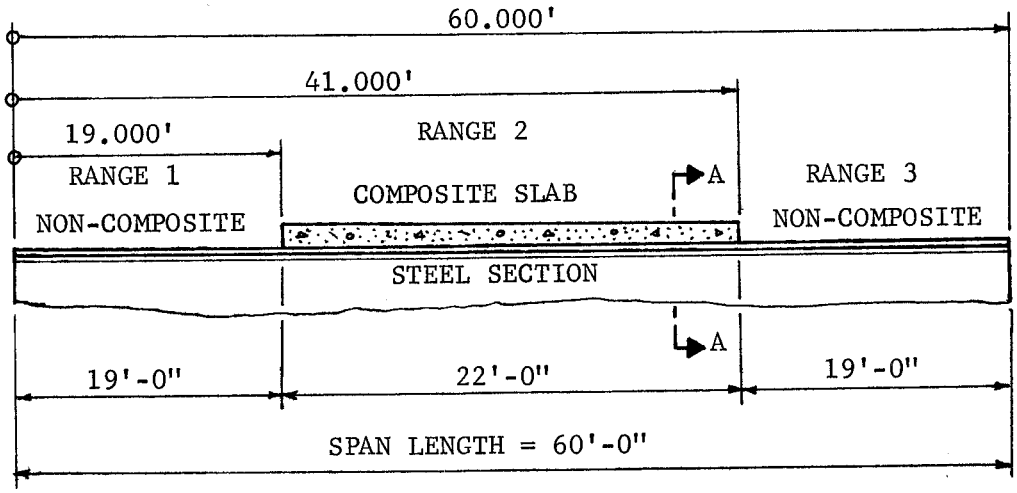

Assume the beams are spaced at 5'-0" center to center. Effective flange width equals 60 inches.

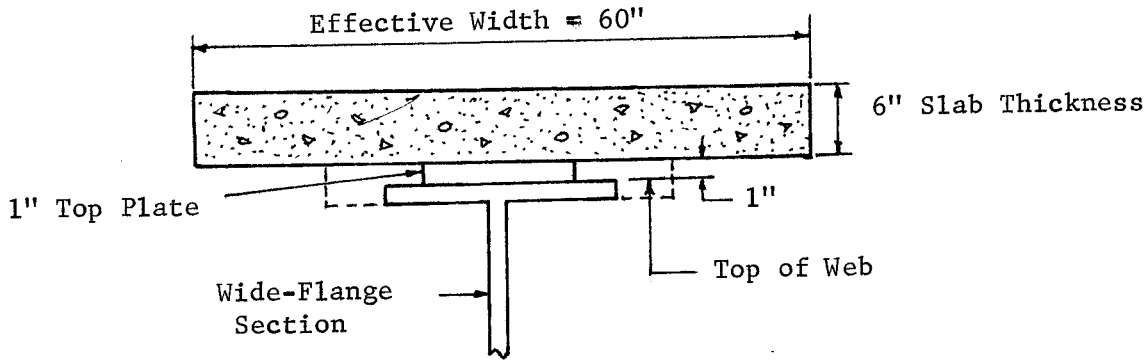

SECTION A-A
No Scale

FORM OF INPUT:

NUMBER OF RANGES							
Bm.	T.R.s	B.R.s	CS	PN	PC	WPN	WPC
			3				

COMPOSITE SLAB	R	4,5,1	19.0 0	41.0 0	60. 0
	W	4,5,2	0. 0	60. 0	0. 0
	T	4,5,3	0. 0	60. 0	0. 0
	e	4,5,4	0. 0	1.0 0	0. 0
	As	4,5,5	0. 0	0. 0	0. 0

CONCENTRATED DEAD LOADS (P-LOADS)

The program has provision for two types of concentrated dead loads: non-composite and composite. In the case of a non-composite beam, only one type of P-load could be used, i.e., the composite P-loads would not be in existence. The examples and discussions that follow will refer to the non-composite P-loads. However, the procedure for filling in the composite P-loads is the same as for non-composite P-loads. The input form provides space for both P-loads with different Load Card Codes for identification purposes. Note that the composite and non-composite P-loads are completely independent of each other, and the limitations and restrictions on the P-loads are for each type of P-load rather than the combination of both types of P-loads.

A maximum of twenty (20) concentrated loads can be entered per span. Note that the input form has ample Load Cards for the non-composite P-loads; whereas, space for only ten composite P-loads is provided. In the case of more than ten composite P-loads, additional lines can be added or other blank Load Cards can be used with appropriate Load Card Code changes. The sequence of the Load Cards must be maintained as given in the input data form. The data for ranges 11 through 20 must immediately follow the corresponding data for ranges 1 through 10. The Load Card Code for range 11 through 20 data is 000. When using more than ten composite P-loads, use the non-composite P-load Load Card sequence as a guide.

Two types of data are required to define each concentrated load:

Xn = distance from the left end of the span to the load Pn in feet.

Pn = the magnitude of the P-load (Pn) in kips.

P-LOADS (continued)

GENERAL NOTES:

1. If there are no concentrated loads in a span, the P-load Load Cards need not be filled in for that span.

2. If there are concentrated loads in a span the number of P-loads must be entered as the number of ranges of the P-loads.

3. P_n loads must be given in consecutive order from left to right along the span under consideration.

4. Only one concentrated load can be placed within any $1/20^{th}$ segment of the span length. If two or more loads do actually occur within any such segment, these loads should be resolved into one resultant and entered as such in the input data form. The following figures will illustrate this provision.

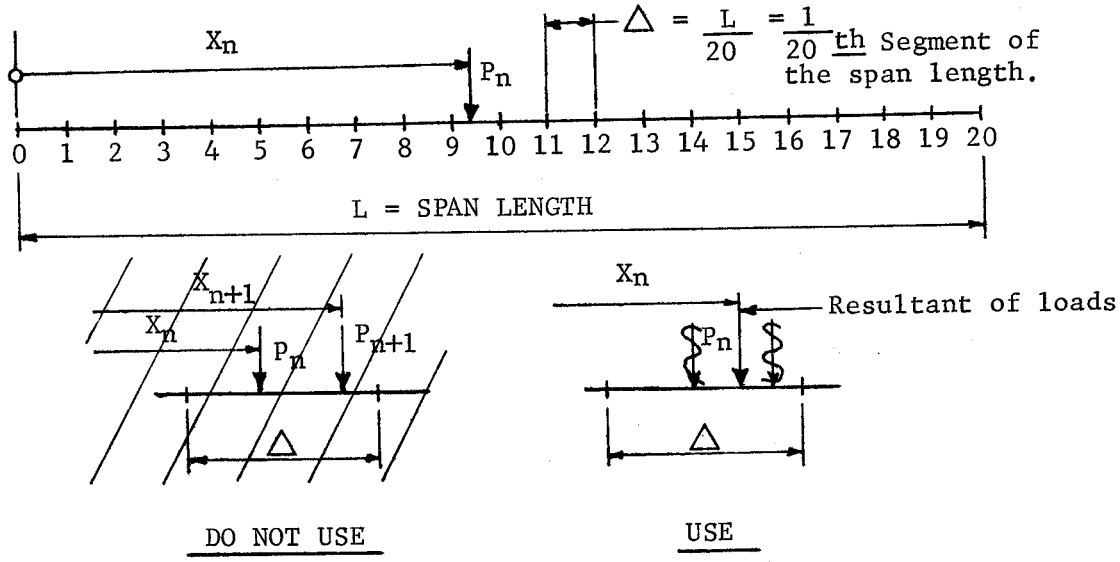

The following loading conditions are accepted by the program:

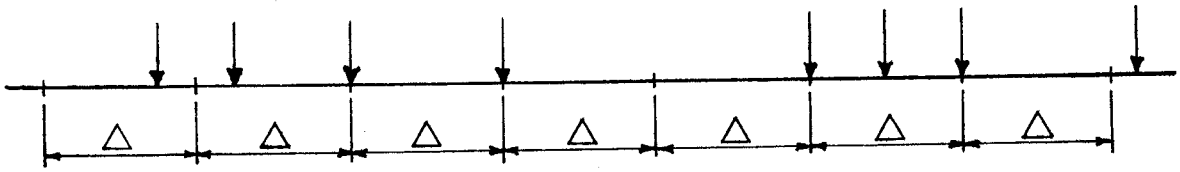

The following loading conditions <u>SHOULD NOT</u> be used:

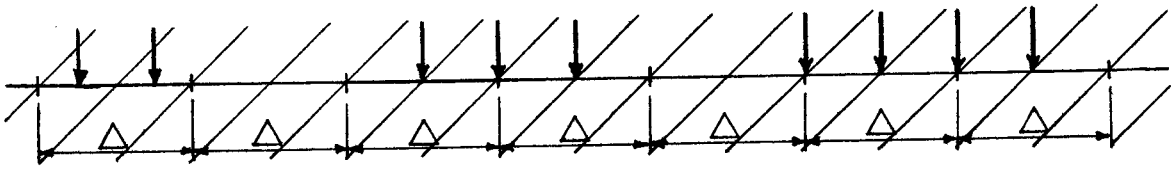

P-LOADS (continued)

EXAMPLES: NON-COMPOSITE CONCENTRATED DEAD LOADS

6-1. ONE CONCENTRATED LOAD IN THE SPAN.

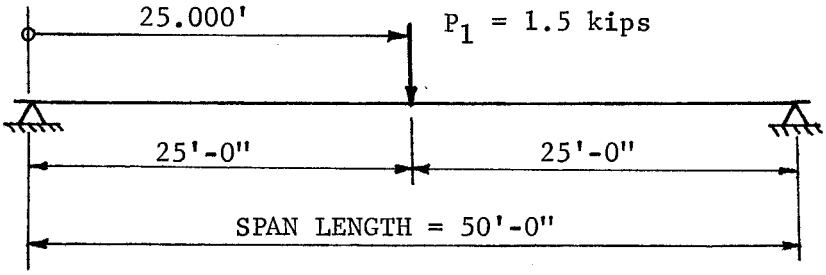

FORM OF INPUT:

NUMBER OF RANGES							
Bm.	T.R.s	B.R.s	CS	PN	PC	WPN	WPC
				1			

NON-COMP. P-LOADS	X	4,6,1	250.0
	X	0,0,0	
	P	4,6,2	1500
	P	0,0,0	

6-2. TWO CONCENTRATED LOADS IN THE SPAN.

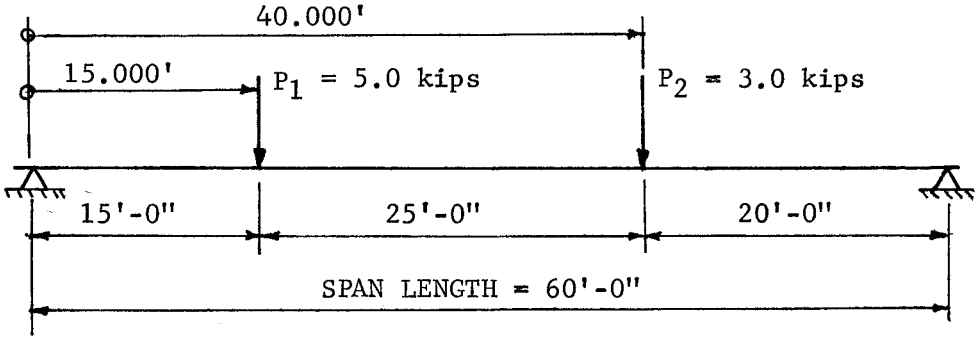

FORM OF INPUT:

NUMBER OF RANGES							
Bm.	T.R.s	B.R.s	CS	PN	PC	WPN	WPC
				2			

NON-COMP. P-LOADS	X	4,6,1	150.0	40.0
	X	0,0,0		
	P	4,6,2	50.0	30.0
	P	0,0,0		

P–LOADS (continued)

6-3. THIS EXAMPLE ILLUSTRATES THE USE OF MORE THAN ONE LINE TO FILL IN THE P-LOAD CARDS.

Assume that there are fourteen (14) concentrated loads in the following span, three kips each and placed at the span fifteenth points.

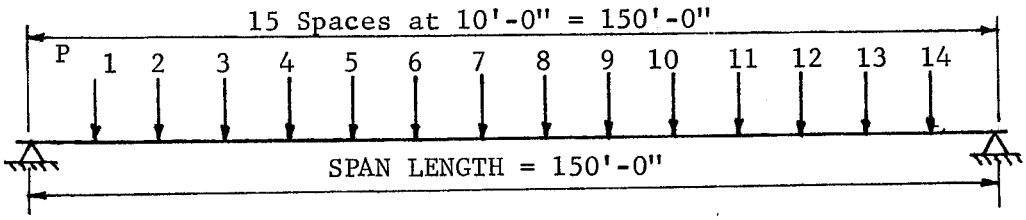

Two Load Cards are required to enter the distances, and two Load Cards are required to enter the magnitude of the P-loads.

FORM OF INPUT:

NUMBER OF RANGES							
Bm.	T.R.s	B.R.s	CS	PN	PC	WPN	WPC
				14			

NON-COMP. P-LOADS	X	4,6,1	10.0		20.0		30.0		40.0		50.0		60.0		70.0		80.0		90.0		100.0		ft
	X	0,0,0	110.0		120.0		130.0		140.0														ft
	P	4,6,2	3.0		3.0		3.0		3.0		3.0		3.0		3.0		3.0		3.0		3.0		kips
	P	0,0,0	3.0		3.0		3.0		3.0														kips

PARTIAL UNIFORM DEAD LOAD

The program has provision for two types of partial uniform dead loads: non-composite and composite. In the case of a non-composite beam, only one type of partial uniform load could be used, i.e., the composite partial uniform load would not be in existence. The examples and discussions that follow will refer to the non-composite partial uniform load. However, the procedure for filling in the composite partial uniform load is the same as for the non-composite partial uniform load. The input form provides space for both partial uniform loads with different Load Card Codes for identification purposes. Note that the composite and non-composite partial uniform loads are completely independent of each other.

A maximum of ten ranges of each load type may be used. A partial uniform load that begins and ends within a span fortieth segment should be entered as a concentrated load. Also for the sake of accuracy, a partial uniform load beginning and ending in adjacent span fortieth segments should be entered as an equivalent concentrated load.

If there are no partial uniform dead loads, the Load Cards for these loads should be left blank. If there are partial uniform loads within the span, enter the number of ranges in the Span Card and fill in the appropriate Load Cards. The ranges must be given from left to right in the same order that they appear in the span. The last range distance must be equal to the span length.

Two types of data are required to define each partial uniform load:

Xn = distance from left end of the span to the right end of the partial uniform load.

Wn = magnitude of the partial uniform load in kips per foot.

When defining a partial uniform load, all portions of the span must be defined as having a partial uniform load. For that portion of a span where no load exists, use a magnitude of zero.

PARTIAL UNIFORM DEAD LOAD (continued)

EXAMPLES: NON-COMPOSITE PARTIAL UNIFORM DEAD LOADS.

7-1. In this example the left half of the span contains a partial uniform load of 1.0 kips per foot.

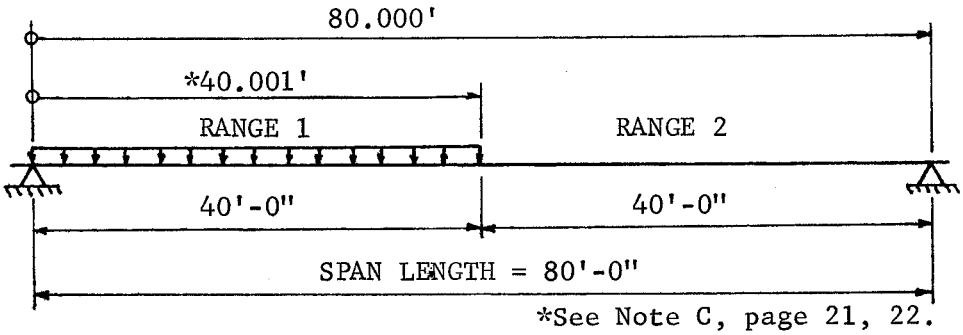

*See Note C, page 21, 22.

FORM OF INPUT:

NUMBER OF RANGES							
Bm.	T.R.s	B.R.s	CS	PN	PC	WPN	WPC
						2	

NON-C Wp	X	4,8,1	40.001	80.0
	W	4,8,2	1.0	0.0

7-2. This example shows the middle third of the span containing a partial uniform load of 0.234 kips per foot.

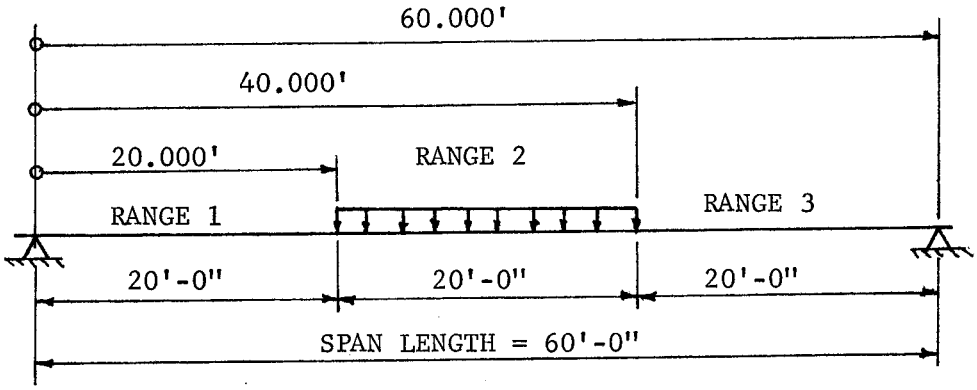

FORM OF INPUT:

NUMBER OF RANGES							
Bm.	T.R.s	B.R.s	CS	PN	PC	WPN	WPC
						3	

NON-C Wp	X	4,8,1	20.0	40.0	60.0
	W	4,8,2	0.0	0.234	0.0

IV. THE OUTPUT DATA

In the following discussion of the output data refer to the output of one of the Example Problems. The output is fully edited with headings for ease in reading and interpreting.

A. INPUT DATA.

The input data will be printed out as part of the formal output. Computed data (distribution factors) and assumed data (modular ratio, stresses, etc.) are also included in the output listing of the input data. It is suggested that the input data output be compared with the input data forms to check the validity of the input data. The print-out of the input data will head the output listing and occupy one or more pages of the listing.

Note that each page of the output data will be headed by the information given as the Beam Identity.

B. BEAM SECTION PROPERTIES AT SPAN TWENTIETH POINTS.

The properties of the beam cross section at each twentieth point in each span and also at the ends of the spans are listed in the output data.

If the beam is of composite concrete-steel construction, three pages of Beam Section Properties will be given. The first listing will contain the non-composite properties, the second listing will contain the composite properties using a modular ratio of 3 N, and the last listing contains the properties computed by using a modular ratio of 1 N. These properties are computed during the three complete analyses of a composite beam. If the beam is concrete or steel (non-composite construction) only one listing of properties will be given in the output.

The properties for the even twentieth points (tenth points) are printed on the left side of the listing, and the properties for the odd twentieth points are given on the right side of the listing.

1. S-PT

This column of data contains the span point and identifies the point where the properties are computed. The span point has the form: m.xx, where m is equal to the span number and .xx is the fraction of the span length to the point where the properties are computed. For example: 3.25 denotes the first quarter point of span 3. Note that the fractions are from the left end of the span.

2. D.WEB Units: inches

The depth of the beam web is given in this column of the output listing. This depth does not include any top or bottom plate thicknesses nor composite slab thickness. If the beam is a wide-

flange steel type, the depth given is the depth of the rolled shape since the wide flange beam is considered a web by the program. If the beam is concrete, any top or bottom slabs defined as top or bottom plates are not included in the web depth.

The type of data given for the cross section depends on the type of beam, i.e., concrete or steel, as follows:

Steel Beams

If the beam is steel or composite concrete-steel the following cross section properties are given.

3. I Units: $inches^4$

The moment of inertia of the cross section is given in this column of the output. This value includes any top and bottom plates and composite slab if appropriate. If the concrete composite slab is included, the area of the slab is converted into an equivalent steel area by dividing the width by the appropriate value of the modular ratio.

4. SM.BS Units: $inches^3$

The values given in this column of the Beam Section Properties are the section moduli of the extreme bottom steel fiber. If a bottom cover plate exists, the value is computed at the bottom of the plate. If the distance from the neutral axis to the bottom of steel is desired, divide the moment of inertia (I) by the section modulus (SM.BS). This value will not be given in the output data.

5. SM.TS Units: $inches^3$

The section modulus of the extreme top steel fiber is given in this column of the Beam Section Properties. If a top cover plate exists, the section modulus is computed at the top of the cover plate. In order to compute the distance from the neutral axis to the top steel fiber, divide the moment of inertia (I) by the section modulus (SM.TS). This data will not be given in the output.

6. SM.TC Units: $inches^3$

The section modulus of the top of the concrete composite slab is given in this column of output data. If the beam is non-composite, this value will always have a value of zero. The distance from the neutral axis to the top of the concrete slab can be determined by dividing the moment of inertia (I) by the section modulus (SM.TC). This value is not given in the output data. The section modulus is computed with the concrete slab transformed into an equivalent area of concrete. Therefore, if concrete stesses are going to be computed using this value, a factor of N (modular ratio) must be introduced to convert the stresses to concrete stresses:

$$Fc = \frac{M}{Sm(N)}$$

Where: Fc = Concrete stress, ksi.
M = Moment in kip-inches.
Sm = Section modulus given in output (SM.TC).
N = Appropriate modular ratio (N or 3N).

7. Q/I Units: inches $^{-1}$

This column of output data contains the ratio of the moment of area (Q) of the composite concrete slab to the moment of inertia (I) of the cross section. The moment of area is computed using the transformed area of the concrete slab. This value is used to compute shear connector spacings during the composite (1N) analysis of the live loads. If the beam is non-composite the Q/I ratio will always be given as zero.

Concrete Beams

If the beam is of concrete construction the following cross section properties are given. The moment of inertia and section moduli of the cross section are not given since these factors are not used in the concrete design process. Rather, factors are given so that the Engineer can determine the adequacy of the beam section by inspection.

Reinforced in Top Only.

The data (JD, AS, RM) given under this heading of the output is computed assuming a balanced design and no reinforcing steel in the bottom of the beam, i.e., no compression steel.

3. JD Units: inches

"JD" is the distance from the reinforcing steel (tension force) to the centroid of the compression block (compression force).

4. AS Units: inches^2

The area of steel required to produce the resisting moment is given in this column. The steel is stressed to the allowable (Fs) given in the input data.

5. RM Units: kip-feet

"RM" is the resisting moment of the cross section assuming the reinforcing steel (AS) and concrete are stressed to the allowable values, i.e., balanced design.

Reinforced in Bottom Only.

The same data (JD, AS, RM) is given under this heading of the output assuming that the beam is reinforced in the bottom only and also a balanced design. See the above discussion of these data values.

The Engineer should be aware of the following assumptions which are made for the computations of resisting moments, steel areas, etc.

1. The reinforcing steel area is assumed to be concentrated in one layer four (4) inches from the face of the concrete section.

2. The resisting moment is computed on the basis of cracked section theory, assuming balanced design, for the allowable extreme fiber concrete compressive stress (Fc) and an allowable reinforcing steel tensile stress equal to Fs.

3. A modular ratio of N is used.

4. All concrete areas in the tension side of the neutral axis are ignored.

5. The compression flanges of the concrete section are equal to the top or bottom plates defined in the input data.

6. The reinforcing steel is always on the tension side and no compression steel is considered.

The designer should be able to check the adequacy of the cross section provided by comparing these resisting moments with the maximum moment given on the next page of the output data. A quick visual inspection will reveal whether the depth of the web is adequate or not. A quick approximation of the area of reinforcing steel required can be made (assuming that the section will be under reinforced) by multiplying the area of steel given (AS) times the maximum moment and dividing the product by the resisting moment (RM).

C. SPAN PROPERTIES.

The Beam Span Properties for each span in the continuous unit are given in the output and listed on the same page as the Beam Section Properties. If the beam is of composite construction, three listings of Span Properties will be given as explained in the explanation of the Beam Section Properties.

1. SPAN

The span number (M) is given in this column for identifying the properties.

2. DL Units: ratio

"DL" is the moment distribution factor at the left end of the span.

$$DL = \frac{KLMm}{KRM_{m-1} + KLM_m}$$

3. KL Units: $feet^3$

The relative stiffness of the left end of the span, assuming the far end (right end) is fixed, is given in this column of the output. See Note D.

4. KLM Units: $feet^3$

"KLM" is the relative stiffness at the left end of the span assuming the far end (right end) is in its actual state of fixity, i.e., modified for one-cycle moment distribution. See Note D.

5. CLR Units: fraction

The value given in this column of the output is the moment carry-over factor from the left end of the span to the right end assuming the right end is fixed.

6. CLRM Units: fraction

"CLM" is the moment carry-over factor from the left end of the span to the right end assuming the right end is in its actual state of fixity.

7. CRLM Units: fraction

The moment carry-over factor from the right end of the span to the left end assuming the left end is in its actual state of fixity is given in this column of the output.

8. CRL Units: fraction

"CRL" is the moment carry-over factor from the right end of the span to the left end assuming the left end is fixed.

9. KRM Units: $feet^3$

The relative stiffness of the right end of the span assuming the far end (left end) is in its actual state of fixity is given in this column of output. See Note D.

10. KR Units: $feet^3$

"KR" is the relative stiffness of the right end of the span assuming the far end (left end) is fixed. See Note D.

11. DR Units: ratio

"DR" is the moment distribution factor at the right end of the span.

$$DR = \frac{KRMm}{KRMm + KLM_{m+1}}$$

Note D. The stiffness factors given in the output are relative

values. To obtain the true stiffness of any member in kip-feet, multiply the output value by 4.62963 E; where E is the modulus of elasticity in kips per square foot. The true stiffness is defined as the moment required to produce an angular rotation of one (1) radian at the end of the member when the far end is in the assumed state of fixity. For more information on the one-cycle moment distribution method see pamphlet No. ST 73, "Influence Lines Drawn As Deflection Curves", published by the Portland Cement Association.

D. MOMENTS (KIP-FEET) AT SPAN TENTH AND MISCELLANEOUS POINTS.

The program computes and reports dead load and live load moments at the span tenth points and at the intermediate supports. In addition, moments are computed and printed for all abrupt changes in moment of inertia, i.e., at ends of cover plates, change in beam size, etc. First, the moments at the tenth points and intermediate supports for all spans are listed. Then the moments at the abrupt changes in section are given. All moments are given in kip-feet rounded to the nearest tenth. A negative moment causes tension in the top of the beam (compression in the bottom), and a positive moment causes tension in the bottom of the beam (compression in the top).

The moments at abrupt changes in section are computed by a curve fitting technique with a high degree of accuracy, i.e., more accurate than plotting and scaling.

1. S.P.

"S.P" identifies the span point and has the following form: m.x, where m is the span number and x denotes the tenth point. If x is zero (o), the moments are for an interior support, between span m and m-1. However, the span points identifying abrupt changes in section are in the following form: m.xxx, where xxx is the fraction of the span length to the point where the moments are computed measured from the left end of the span.

NON-COMPOSITE DEAD LOADS

The non-composite dead loads are the loads applied to a composite steel beam without any composite action with the concrete slab, i.e., first stage of construction when no composite action exists. If the beam is non-composite (either steel or concrete) these loads would be normally termed plain dead loads.

2. BEAM.

The moments due to the weight of the beam are given in this column of output. The weight of the beam includes the area of the web (or wide flange section, or area of non-standard beam) plus the top and bottom plates. Composite slab areas are not included. Moments due to the beam weight are not given at abrupt changes in section.

3. PN

This column contains the moments due to the non-composite concentrated P-loads. Note that these moments are not given at abrupt changes in moment of inertia.

4. WDLNC.

These moments are caused by the uniform non-composite dead load (WDL_{nc}) given in the input data. Moments due to this load

are not shown at abrupt changes in section.

5. WPN

This column contains the moments due to a partial uniform non-composite dead load. These moments are not listed for the abrupt change in section points.

6. TOT.NC

This column of moments contains the summation of the four non-composite dead load moments. Note that this total moment is given at abrupt changes in section. The total dead load moment at a change in cross section is computed by a curve fitting method using the total non-composite dead load moment curve rather than each individual dead load moment curve.

COMPOSITE DEAD LOADS

The composite dead loads are applied to the steel beam which has composite action with the concrete slab. A modular ratio equal to 3N is used to determine the long-term effects of creep in the concrete. If the beam is non-composite (either steel or concrete) these loads would not exist, and the moment values will always be given as zero (0.0).

Note that moments at abrupt changes in cross section are not given for the individual composite dead loads, but will be given for the total composite dead load in the same manner as the non-composite dead loads.

7. PC

This column contains the moments due to the concentrated composite dead loads.

8. WDLC

The moments due to the uniform composite dead load are given in this column of output. This load was given as "WDLc" in the Beam Constants line of the input form.

9. WPC

This column contains the moments due to the partial uniformly distributed composite dead load.

10. TOT.C

The summation of the three composite dead load moments is given in this column.

LIVE LOADS

The moments due to the highway live loads (truck, lane and military) contain impact and the distribution factor for moment (D_M^F).

Only the moment with the largest magnitude is given in the output. For example, if the lane load moment is greater than the truck or military moment, the lane load moment is printed. The other moments are not given in the output. A letter code is printed after the highway live load moments to identify the type of controlling live load:

L = Lane load moment
T = Truck load moment
M = Military load moment

The letter code is not given with the live load moments at abrupt changes in the beam cross section. The military live load is considered only when computing positive live load moments. It has been found that military loading controls negative moments so seldom and in such a small degree that the consideration of military loading is unwarranted.

Sidewalk live load moments are due to the input value (WSW) and do not include any provision for impact or distribution.

11. SWK.+

The moments given in this column are the maximum positive moments due to the uniform sidewalk live load.

12. SWK.-

This column contains the maximum negative moments due to the uniform sidewalk live load.

13. LL+I+

The moments in this column are the maximum positive moments due to the highway live loads considered by the program: lane, truck or military.

14. LL+I-

This column contains the maximum negative moment due to the highway live loads, i.e., the maximum of lane or truck.

TOTALS

15. MAX.+

This column contains the total maximum positive moment. Actually this column is the sum of the total non-composite (TOT.NC) and composite (TOT.C) dead loads, the sidewalk maximum positive moment (SWK.+) and the highway live load maximum positive moment (LL+I+).

16. MAX.-

The total maximum negative moments are given in this column. These moments are the sum of the dead loads and the maximum negative live load moments.

E. STRESSES AT SPAN TENTH AND MISCELLANEOUS POINTS.

Actual stresses and allowable fatigue stresses are computed by the program and listed for the top of a composite concrete slab, top steel fiber, and bottom steel fiber at the span tenth points, intermediate supports, and on both sides of all abrupt changes in cross section. All stresses are given in pounds per square inch; and, due to the insignificance, the stresses are not rounded-off, i.e., truncated.

Stresses will not be given if the beam is concrete. If the beam is steel and non-composite, the "top of concrete" stresses will always be given as zero. However, if the beam is composite, actual concrete stresses are given at the top of the slab, i.e., the stresses have been adjusted by the modular ratio. When computing composite beam stresses, the non-composite dead loads are applied to the non-composite properties, the composite dead loads are applied to the composite (3N) properties, and the live loads are applied to the composite (1N) properties.

Sign Convention: A negative stress indicates tension, and a positive stress denotes compression.

Note: Stresses in reinforcing steel in composite slabs over intermediate supports (or elsewhere) are not given in the output. These stresses can be easily computed by hand since moments and section moduli are given in the output data.

1. S.PT.

This column of data locates the Span Point where the stresses are given and has the following form: m.xxx. Where "m" is the span number and "xxx" is the fraction of the span length from the left support to the point where the stresses are given. Note that the stresses at the tenth points are listed first and at the abrupt changes in section secondly. Stresses at changes in section require two lines of output (the S.PT. is repeated) since the stresses are given based on the section properties of the beam section immediately on the left and on the right of the change in section. The first line gives the stresses on the left of the abrupt change in section, and the second line gives the stresses on the right.

ACTUAL STRESSES

The actual stresses due to the applied loads are listed on the left side of the print-out. Three major groupings of stresses are given as follows:

TOTAL DEAD LOAD

The total dead load stresses are the result of all non-composite and composite dead loads applied to the beam. Three columns of stresses are given as follows:

2. TOP CONC.

This column of data contains the total dead load stress in the top of the composite concrete slab. Therefore, this column contains

real stress values only when the beam is composite, and then only in the regions where the beam has composite action.

3. TOP STEEL.

The total dead load stresses in the topmost steel fibers are listed in this column of the output.

4. BOT. STEEL.

This column contains the total dead load stresses in the bottommost steel fibers.

D.L. + L.L. POS.

The three columns of stresses given here are the result of the total dead load moments plus the maximum positive live load moments.

5. TOP CONC.

This column contains the composite concrete slab stresses due to dead loads and maximum positive live loads, i.e., maximum compression stress.

6. TOP STEEL.

The maximum positive moment stresses in the topmost steel fiber are given in this column of the output, i.e., maximum compression stress.

7. BOT. STEEL.

This column contains the maximum positive moment stresses in the bottommost fiber of the steel beam, i.e., maximum tension stress.

D.L. + L.L. NEG.

The three columns of stresses given here are the result of the total dead load moments plus the maximum negative live load moments.

8. TOP CONC.

This column contains the composite concrete slab stresses due to dead loads and maximum negative live loads, i.e., maximum tension stress.

9. TOP STEEL.

The maximum negative moment stresses in the topmost steel fiber are given in this column of the output, i.e., maximum tensile stress.

10. BOT. STEEL.

This column contains the maximum negative moment stresses in the bottommost fiber of the steel beam, i. e., maximum compression stress.

ALLOWABLE FATIGUE STRESSES

Five types of allowable fatigue stresses are computed at the span tenth points, intermediate supports, and on each side of abrupt changes in cross section. Four of these fatigue stresses are computed and given for the top and bottom steel fibers. The "R" factor used in the fatigue stress computations is the algebraic ratio of the minimum stress to the maximum stress rather than moment, etc., ratios. All computations are based on Article 1.7.3 AASHO Specifications, 1969 and Interims 1970, 1971. The fatigue stresses will not exceed the basic allowable stress. All allowable fatigue stresses are given as positive unless noted otherwise.

BASE METAL.

If the beam fibers (top or bottom) are subjected to tension or reversal (tension and compression), the base metal allowable fatigue stress is computed as follows:

$$Fr = \frac{f_{ro}}{1-R}$$

No. of maximum stress cycles	f_{ro}
100,000	60
500,000	36
2,000,000	24

Note that this fatigue stress does not depend on the type of steel.

However, if the top or bottom fibers are always in compression, the allowable fatigue stresses are computed as follows:

$$Fr = \frac{Fa}{1-k_2(R)}$$

Where:

$$Fa = 0.55(Fy)$$

$$k_2 = \frac{Fa}{k_1(f_{ro})} - 1$$

$$k_1 = 1.0 + \alpha\left[\left(\frac{Fu}{58}\right) - 1\right] \geq 1.0$$

No. of maximum stress cycles	f_{ro}	α
100,000	13.3	1.06
500,000	13.3	0.78
2,000,000	13.3	0.54

The type of fatigue stress given (tension or compression) is determined by whether the steel beam fibers are always in compression or otherwise.

11. TOP STEEL.

This column contains the allowable base metal fatigue stress in the topmost fiber of the beam.

12. BOT. STEEL

The allowable base metal fatigue stresses in the bottommost fiber of the beam are given in this column of output data.

BASE METAL ADJ. FILLET WELD.

The allowable fatigue stresses for base metal adjacent to or connected by fillet or plug welds are computed as follows:

$$Fr = \frac{f_{ro}}{1-R}$$

No. of maximum stress cycles	f_{ro}
100,000	21
500,000	12.5
2,000,000	8

Note that this fatigue stress is independent of the type of steel, and that tension and compression allowable fatigue stresses are the same.

13. TOP S

This column contains the allowable fatigue stresses for the topmost beam fibers.

14. BOT. S

The allowable fatigue stresses for the bottommost beam fibers are listed in this column.

BASE M. ADJ. CON. FIL. WELD

The allowable fatigue stresses for base metal adjacent to continuous flange-web fillet welds are computed as follows:

$$Fr = \frac{f_{ro}}{1-R}$$

No. of maximum stress cycles	f_{ro}
100,000	45
500,000	27.5
2,000,000	18

Note that this fatigue stress is independent of the type of steel, and compression and tension allowable fatigue stresses are the same.

15. TOP S

This column contains the allowable fatigue stresses for the topmost steel beam fiber.

16. BOT. S

The allowable fatigue stresses for the bottommost steel beam fibers are listed in this column.

BASE M. ADJ. BUTT WELD

The allowable fatigue stresses in tension for base metal (or weld metal) adjacent to butt welds are computed as follows:

$$Fr = \frac{k_1(f_{ro})}{1-k_2(R)}$$

Where:

$$k_1 = 1.0 + \alpha\left[\left(\frac{Fu}{58}\right) - 1\right] \geq 1.0$$

No. of maximum stress cycles	k_2	α	f_{ro}
100,000	0.55	0.65	20.5
500,000	0.62	0.23	17.2
2,000,000	0.67	0	15.0

The allowable fatigue stress in compression for base metal adjacent to butt welds is computed by the following formula:

$$Fr = \frac{Fa}{1-k_2(R)} \qquad Fa = 0.55(Fy)$$

$$k_2 = \frac{Fa}{k_1(f_{ro})} - 1$$

$$k_1 = 1 + \alpha\left[\left(\frac{Fu}{58}\right) - 1\right] \geq 1.0$$

No. of maximum stress cycles	α	f_{ro}
100,000	0.65	13.3
500,000	0.23	10.6
2,000,000	0	9

If the top or bottom of the beam is subjected to reversal of stress the program selects the fatigue stress (tension or compression) which is more critical. Therefore, if the output fatigue stress is negative, the controling fatigue stress given is for tension. If the fatigue stress is positive, the controling fatigue stress is compression.

17. TOP S

This column contains the allowable fatigue stresses for the topmost steel beam fiber.

18. BOT. S

The allowable fatigue stresses for the bottommost steel beam fibers are listed in this column.

FLANGE W STUD

The allowable fatigue stress in tension for base metal with attached stud shear connectors is computed as follows:

$$Fr = \frac{k_1(f_{ro})}{1-k_2(R)}$$

$$k_1 = 1 + \alpha\left[\left(\frac{Fu}{58}\right) - 1\right] \geq 1.0$$

No. of maximum stress cycles	α	f_{ro}	k_2
100,000	1.06	20.5	0.55
500,000	0	16.5	0.65
2,000.000	0	11.5	0.75

These stresses are computed and listed only for the top flange of the beam. The stresses are headed by "TOP S".

A visual comparison of the maximum actual stresses with the allowable fatigue stresses will determine if a portion of the beam is overstressed. Then adjustments can be made as required. A plot of some of the stresses may be beneficial; for example, a plot of maximum stress versus base metal adjacent to fillet welds can be used to assist in cutting off cover plates, or indicate if it is possible to cut them off.

F. SHEARS AND SHEAR CONNECTOR SPACINGS AT SPAN TENTH POINTS AND REACTIONS.

Dead load and live load shears are computed by the program at the span tenth points and ends of the span. In addition, reactions at the intermediate supports due to dead and live loads are computed and listed in the output data. If the beam is of composite concrete-steel construction, shear connector spacings are given in the output. The shears, etc., are not given at abrupt changes in cross section. Shears and reactions are given in kips, and shear connector spacings are in inches.

Shear Sign Convention:

Positive Shear Negative Shear

1. S.PT

The first column of the output contains the span point which identifies the span and the tenth point where the shears are given, i.e., m.xx. For example, 2.00 identifies the right end of span 1 or the left end of span 2. There should be no confusion since the shear at the right end of span 1 is listed first, and the two lines of shears are separated by the intermediate support reactions. The reactions are identified by "RM-N", where M and N are the span numbers of the adjacent spans.

DEAD LOADS

2. BEAM

The shears and reactions due to the weight of the beam are given in this column. The weight of the beam includes the area of the web (or area of wide flange or non-standard section) plus the top and bottom plates. Composite slab areas are not included.

3. PN

This column contains the shears and reactions due to the non-composite P-loads (concentrated) given in the input data.

4. WN

This column of shears and reactions are caused by the uniform non-composite dead load, WDLnc, that was given in the input data.

5. WPN

"WPN" heads the column that contains the shears and reactions due to the non-composite partial uniform dead load.

6. 'TOT.C

This column of shears and reactions is the sum of all composite dead loads, i.e., uniform composite dead load (WDLc) plus composite P-loads plus composite partial uniform dead load. The effects of each dead load are not listed separately.

7. TOT.DL

This column contains the sum of all dead load shears and reactions, composite plus non-composite.

LIVE LOADS

The live load shears and reactions consist of the maximum negative and positive effects due to sidewalk and highway live loads. Only the maximum value from the highway loads (truck, lane, military) is printed in the output. A letter code identifies the type of load that governed (L for Lane, T for Truck, and M for Military). Note that negative reactions (uplift) are not given at intermediate supports. The shears and reactions are given to the nearest pound, i.e., thousandth of a kip.

8. SWK.+

This column contains the maximum positive sidewalk live load shears and reactions. These values are due to the input value for WSW.

9. SWK.-

The maximum negative sidewalk live load shears are given in this output data column.

10. LL+I+

This column contains the maximum positive shear and reaction due to highway live loads (truck, lane or military) distributed for moment and including the varying impact value. The letter code after the value indicates which live load controlled the shear or reaction. When computing shears at the ends of the spans or reactions at the intermediate supports, the following factor (Ve) is added to the shear to compensate for end shear distribution:

$$Ve = (DFV-DFM)W$$

Where:

DFV and DFM are input values.
W is the truck's largest wheel distributed for moment and impact.

This gives exact values when truck loading controls. However, when lane or military loading governs, the results will be slightly conservative. In any event the designer can correct the results easily, or else use the same value for DFV and DFM.

11. LL+I-

This column contains the maximum negative shears due to highway live loads. A letter code identifies the controlling live load, i.e., truck (T), lane (L), or military (M). The negative live load shear at the ends of the spans is adjusted for end shear distribution in the same manner as the positive live load. See item 10 (LL+I+) discussion.

12. MAXIMUM V OR R

This column contains the maximum magnitude of shear or reaction from the

summation of total dead load and positive or negative live loads (sidewalk and highway), whichever gives the largest magnitude, i.e., absolute value.

13. LL SHEAR RANGE

This column of data contains the range of live load shear. These values are used to compute shear connector spacings and will not be listed if the beam is not of composite construction. The range in live load shear is computed as follows:

$$V^{+}_{SW} + V^{+}_{LL+I} - V^{-}_{SW} - V^{-}_{LL+I}$$

The symbols are self-explanatory.

14. SHEAR CON. SP.

If the beam is of composite construction, this column will contain the shear connector spacings. The spacings in regions of non-composite action will be given as zero. The program assumes the maximum spacing to be twenty-four (24) inches. The spacings are computed as follows:

$$S = \frac{\sum Zr}{Vr\left(\frac{Q}{I}\right)}$$

Where: $\sum Zr$ is given in the input data, kips.

Vr is the live load shear range, kips.

Q/I is the ratio of moment of area to moment of inertia (1N), in^{-1}.

S is the shear connector spacing in inches.

MISCELLANEOUS DATA

At the bottom of the output page of shears, two factors are given for the first (1) and last span. These values are computed at the ends of the continuous unit, i.e., left end of span one and right end of the last span.

15. V LANE Units: kips

"V LANE" is the maximum reaction (end shear) produced at the end of the continuous unit by the uniform lane live load, distributed for moment and including impact. The concentrated lane load is not included.

16. V 14 FT.

This data item is the reaction (end shear) produced at the end of the continuous unit by one of the heavy wheels of the standard truck, distributed for moment and including impact, when that wheel is placed 14 feet from the end support.

The purpose of "V LANE" and "V 14 FT." is to assist the designer in computing the maximum reaction at an intermediate support or pier when that support is common to the ends of two continuous units, or a continuous unit and simple span.

G. DEAD LOAD DEFLECTIONS AT SPAN TWENTIETH POINTS.

Dead load deflections in inches are computed and listed for each twentieth point of all spans. All deflections are given to the nearest thousandth of an inch. A negative deflection indicates an upward deflection and a positive deflection is downward. Deflections for the odd twentieth points are on the left, and even twentieth (tenth) point deflections are listed on the right of the output sheet. If the modulus of elasticity (E) is given a value of zero in the input data, no deflections will be given. Deflections of concrete beams are based on the gross section, i.e., a transformed section is not considered.

1. S.PT

The span point is given in this column which locates the position where the deflections are given. It has the form: m.xx; where m is the span number and .xx is the twentieth point fraction designating the distance from the left support to the point.

2. BEAM

These columns contain the deflections due to the weight of the beam. The beam weight includes the area of the web (wide flange or non-standard area) plus the top and bottom plates.

3. PN

This column contains the deflections due to the non-composite P-loads.

4. WN

This column contains the deflections due to the non-composite uniform dead load, WDLnc.

5. WPN

The deflections due to the non-composite partial uniform dead load are given in this column.

6. TOT.NC

This column gives the total of all non-composite dead load deflections, BEAM + WN + PN + WPN.

7. TOT.C

This column contains the total composite dead load deflections, i.e., the sum of the uniform (WDLc), P-loads, and partial uniform composite dead loads. The deflections of each individual load are not listed. If the beam is non-composite, these deflections are given as zero.

8. TOT.DL

This column contains the total of non-composite plus composite dead load deflections.

H. LIVE LOAD DEFLECTIONS

The live load deflections are listed on the bottom of the page containing the dead load deflections. All live load deflections are given in inches. These deflections include distribution for live load deflections (DFD) and impact.

1. SPAN

This column contains the span number for which the deflections are given.

2. AT

The data in this column locates the point where the deflections were computed. The distance to the point from the left support is given in terms of a fraction of the span length (L). For example: 0.500 L is the midpoint of the span.

3. LANE

This column contains the maximum deflection due to lane live load.

4. TRUCK

The maximum deflection due to truck live load is given in this column.

5. MIL.

The maximum deflection due to military live load is given in this column.

6. SIDEWALK

This column contains the maximum deflection due to the sidewalk live load.

7. L/800

This column of data contains the normally allowed live load deflection.

V. MISCELLANEOUS APPLICATIONS

"The Analysis of Continuous Beams for Highway Bridges" computer program is primarily designed for the solution of continuous beams for highway bridges. However, the program can be used to obtain information which can be of great help to the Engineer in several other phases of design. Some of these applications are discussed below.

ESTIMATE OF QUANTITIES.

An accurate check on the weight of steel, or volume of concrete, in the beam can be obtained from the output. For example, the summation of all the reactions due to the weight of the beam must be equal to the total weight of the beam. These values will be of particular help in the case of beams of variable cross section.

INFLUENCE LINES.

For the design of highway bridges the Engineer will usually not need the influence lines and areas since all the work on these curves is performed by the program. However, these curves will be of help in the case of other types of live loading as in the case of a railroad bridge. In this case the analysis for dead loads can be performed by the program and the highway live loads can be eliminated by omitting them in the input data form. During the course of the program influence lines are developed with twenty (20) ordinates per span. These ordinates can be obtained by modifying the source program to include a routine for printing these ordinates in the output and recompiling the source program. Also by including a routine to print out the table of span constants the Engineer will obtain additional information such as the areas of the curves, magnitude and location of the maximum ordinates, etc.

An alternate procedure can be used to develop influence lines by making several runs of the program. In this case, the Engineer can place a unit concentrated load (for instance 10,000 pounds) at the one-tenth point in span 1, then make another run with the same load placed at the two-tenth point, etc. Each run will yield the moments, shears and reactions throughout the beam due to the respective concentrated load. The final results can be then transformed into influence lines with ordinates at each tenth point in each span. Note that by using a unit non-composite and composite concentrated load, the effects due to two unit loads can be obtained in one run.

The positive and negative areas of the influence lines can be easily obtained by making a run with a sidewalk live loading of unity, say 1,000 pounds per foot.

The complete influence line for deflection at any twentieth point of any span can be developed by one run of the program by placing a unit concentrated load (for instance 1,000 pounds) at the point where the influence line is needed. The output of deflections due to the concentrated load will then be the influence line ordinates for deflections at the point where the concentrated load is placed, i.e., Maxwell's Law of Reciprocal Deflections.

BEAM SECTION PROPERTIES.

The beam section properties given in the output (moment of inertia, etc.) can be used to obtain properties for designing and developing charts or tables of beam properties. This is very helpful when computing the properties of composite sections where the computations can become very time-consuming. These properties can be of particular assistance when designing, for instance, a composite simple span.

BEAM SPAN PROPERTIES.

The beam span properties (stiffness, carry-over) given in the output may be of benefit when analyzing another type of structure, for instance a rigid frame where the members have a varying moment of inertia. In this case the members may be entered as spans in a continuous unit to obtain the properties of the members to be used in an analysis.

SETTLEMENT OF THE SUPPORTS.

The program can be used very conveniently for the investigation of the stresses produced by a settlement of the supports. For example: Let it be required to find the effect of settlement of support number 2 in a three-span continuous beam. For the solution, the Engineer can consider an imaginary two span beam in which the first span has a length and shape equal to those resulting from combining the first and second span of the actual beam. The second span of the imaginary beam will be the same as the third span in the actual beam. Then the imaginary beam can be analyzed for a concentrated load of a unit value placed at the point corresponding to support No. 2 in the actual beam. The solution will yield the moments, shears and deflections produced in the imaginary beam. Since the settlement of the support in the actual beam is known its effect in the beam can then be computed by direct proportion from the analysis of the imaginary beam. If more than one support needs to be investigated, a separate run can be made for each support and the effects can then be superimposed.

SIMPLE SPANS.

A simple span can be effectively analyzed by this program by including the span in an imaginary two span continuous unit. The other span must be very long and have a very small moment of inertia. This in effect makes the span have a stiffness equal to zero. The remaining span (the actual simple span) will then act essentially as a simple span in the analysis.

COMPOSITE BEAM DEFLECTIONS.

This program can be used effectively to compute deflections due to the alternate sequence of pouring of composite bridge decks, where earlier poured sections have obtained composite action before later composite areas are poured. The procedure would be to make several runs with each pour section entered as a partial uniform load. This will give the deflections due to that pour which then can be summed with the deflections from other pours to give the final deflections.

VI ERROR MESSAGES

The Continuous Beam Analysis computer program checks the validity of the input data as it is read into the computer and processed. Checking the data will consist mainly of checking the procedure used in entering the input data and the omission of required data. The program is unable to check the validity of the data itself. For instance, the value of the length of span entered in the input form cannot be checked; however, the program knows the value entered should not be zero.

If an error is detected by the program, processing of the problem is terminated and, after an "Error Message" is printed, proceeds to process the next problem. The Error Message is in the following form:

ERROR i SPAN m PROB. NO. n CONTINUOUS BEAM ANALYSIS

Where:

i = The error number.

m = The number of the span in which the error was detected. If m is equal to zero, the error was detected prior to the first span.

n = The problem number that was given in the Identification data.

Following is a list of the error numbers and the cause of the error:

Error Number (i)	Cause of Error
1 m=0	1. The first card of the problem is missing. 2. An asterisk is not in card column one of the Identification card. 3. The continuation code indicating additional Identification lines is used erroneously.
2 m=0	1. The Type digit code (s) is not equal to zero (blank) or one (1). 2. Beam Constants card is missing or doesn't contain the digit one (1) in card column one. 3. The number of spans is less than two or greater than eight. 4. The live load class is invalid. 5. Beam spacing is zero and the distribution factor for moment is zero.
3 m=0	1. Optional Beam Constants card is missing or doesn't contain the digit two (2) in card column one. 2. An illegal digit is used in the live load skip code.
4	1. Span card is missing or out of sequence. 2. Length of span is equal to zero. 3. The number of ranges of a related group of data (beam, top plates, etc.) is invalid. 4. An illegal beam type code has been used. 5. Span "m" has been defined as identical to an undefined span (i.e., not processed).

Error Number (i)	Cause of Error
5	1. A beam or web load card is missing or out of sequence. 2. The last range of beam or web is less than the span length. 3. An illegal wide-flange beam designation has been given.
6	1. A top plate load card is missing or out of sequence. 2. The last range of top plates is less than the span length.
7	1. A bottom plate load card is missing or out of sequence. 2. The last range of bottom plates is less than the span length.
8	1. A composite slab load card is missing or out of sequence. 2. The last range of the composite slab is less than the span length.
9	1. A non-composite P-load load card is missing or out of sequence.
10	1. A composite P-load load card is missing or out of sequence.
11	1. A non-composite partial uniform load load card is missing or out of sequence. 2. The last range of a non-composite partial uniform load is less than the span length.
12	1. A composite partial uniform load load card is missing or out of sequence. 2. The last range of a composite partial uniform load load card is less than the span length.

After receiving a problem that has been aborted with an error message, correct the error if possible noting the correction to be made, and resubmit the problem. If the error appears to be in key-punching, resubmit the problem so noted for correction in the Data Processing Center.

VII EXAMPLE PROBLEMS

The example problems on the following pages are given for the purpose of illustrating how the input data is prepared and to show the form of the output data. These examples are not intended to represent an actual beam as used in normal design practice.

Each example consists of a layout of the beam with the required input information given, the completed input data forms from which the input data cards are punched, a listing of the formal output, and a commentary on the example problem.

Five example problems are given as follows:

Example No. 1: 100-100-100 Continuous Unit,
Constant Beam Section.

Example No. 2: 45-60-45 Continuous Unit,
Variable Depth Plate Girder.

Example No. 3: 82-104-82 Continuous Unit,
Variable Wide-Flange Sections with Cover Plates.

Example No. 4: 57-77-77-57 Continuous Unit,
Variable Depth Reinforced Concrete T-Beam.

Example No. 5: 82-104-82 Continuous Unit,
Composite, Variable Wide-Flange Sections with Cover Plates.

EXAMPLE NO. 1: 100 - 100 - 100 CONTINUOUS UNIT CONSTANT CROSS SECTION

This example is given only to illustrate an actual run of the problem and the form of the input and output. It does not represent an actual structure as used in practice.
The cross section is set constant throughout the beam and the loads are given as unity so that the effects of the different loading conditions can be easily compared.

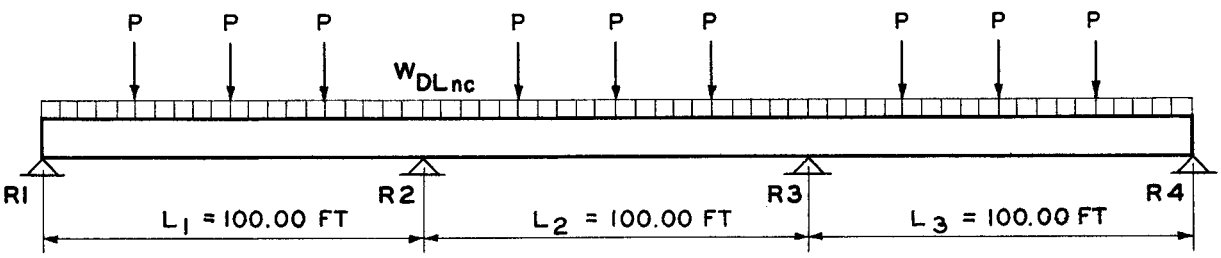

SET: $W_{DL_{nc}}$ = 1,000 Lb./Ft.; P = 10,000 Lb. at 0.25L, 0.50L, and 0.75L in each span.

Live Load:
HS20
&
Military

SET: $D^F_M = 2.0$ $D^F_{Ve} = 2.0$

$D^F_D = D^F_M = 2.0$

W_{SW} = 1,000 Lb./Ft.

SET: W_G = 120.0 Lb./Ft.^{3};

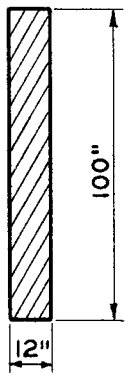

E = 1.00 10^6 Lb./in.^{2}

SET: 12" × 100" CONSTANT CROSS SECTION

D = 100.00 in.

A = 12 × 100 = 1,200 in.^{2}

$$I = \frac{12 \times 100^3}{12} = 1{,}000{,}000.0 \text{ in.}^4$$

Note that the cross section is set so as to have an equivalent weight of 1,000 Lb./Ft., which is the same as $W_{DL_{nc}}$. Since the value of I (1,000,000.0) is too large to enter in the input form, a value of 999,999.9 is used.

CONTINUOUS BEAM ANALYSIS

STATE HIGHWAY DEPARTMENT OF GEORGIA
BRIDGE DIVISION

1-4-71

DESIGN DATA

IDENTIFICATION

ENTER "CONT" IF ADDITIONAL CARD OF REMARKS IS USED.

	PGM.	PROB. NO.	REMARKS, PROJECT NUMBER, DATE, COUNTY, NAME, ETC.	CONT
*	B.O.I	EX.1	EXAMPLE NO.1, 100-100-100 CONTINUOUS UNIT CONSTANT CROSS SECTION	CONT
*	NOT AN ACTUAL DESIGN			

BEAM CONSTANTS

"I" = NON-COMP. BM.
"O" = COMP. BM.

	BEAM IDENTITY	Ns	℄ CLASS	TYPE	WDLnc	WDLc	WSw	WG	E	BM. SPAC.	Σ Zr
1	EXAMPLE NO.1	3	HS20	1 0	1.000		1.000	1.200	1.00		

"I" = CONC. BM.
"O" = STEEL BM.

"I" = EXT. BM.
"O" = INT. BM.

OPTIONAL BEAM CONSTANTS

	D^F_M	D^F_{Ve}	D^F_D	n = Es/Ec 1n	3n	℄ SKIP T	L	M	NO. ℄ CYCLES	Fy	Fu	Fc	Fs
2	2.0 0	2.0 0	2.0 0										

Fy & Fu NOT REQUIRED WITH CONCRETE BEAM.
Fc & Fs NOT REQUIRED WITH STEEL BEAM.

BEAM CONSTANTS

BEAM IDENTITY – BEAM NAME, i.e., Bm. A LT.

Ns – NUMBER OF SPANS ($2 \leq Ns \leq 8$).

℄ CLASS – A.A.S.H.O. ℄ DESIGNATION, HS 20, H15, etc.

WDLnc – UNIFORM NON-COMPOSITE DEAD LOAD, kips/ft.

WDLc – UNIFORM COMPOSITE DEAD LOAD, kips/ft.

Wsw – UNIFORM SIDEWALK LIVE LOAD, kips/ft.

WG – UNIT WEIGHT OF BEAM MATERIAL, lbs./ft.^{3}

E – MODULUS OF ELASTICITY OF BEAM MATERIAL, million lbs./in.^{2}

BM. SPAC. – BEAM SPACING, ft.

Σ Zr – SHEAR CONNECTOR CAPACITY, ONE TRANSVERSE ROW, kips.

DO NOT INCLUDE BEAM WEIGHT IN WDLnc.

OPTIONAL BEAM CONSTANTS

D^F_M – DISTRIBUTION FACTOR FOR MOMENT, SHEAR.

D^F_{Ve} – DISTRIBUTION FACTOR FOR END SHEAR.

D^F_D – DISTRIBUTION FACTOR FOR ℄ DEFLECTIONS.

n – MODULAR RATIO SHORT (1n) AND LONG (3n) TERM VALUES. (10 and 30 assumed if not given)

℄ SKIP – ENTER DIGIT "1" TO SKIP TRUCK (T), LANE (L), OR MILITARY (M) LIVE LOAD.

	VALUES ASSUMED IF NOT GIVEN
NO. ℄ CYCLES – NUMBER CYCLES MAXIMUM STRESS.	500,000
Fy – MIN. YIELD STRENGTH BEAM MATERIAL, kips/in.^{2}	36.0
Fu – MIN. TENSILE STRENGTH BEAM MATERIAL, kips/in.^{2}	58.0
Fc – ALLOWABLE CONCRETE FLEXURE STRESS, kips/in.^{2}	1.200
Fs – ALLOWABLE REINFORCING STEEL STRESS, kips/in.^{2}	20.0

CONTINUOUS BEAM ANALYSIS

SPAN 1 OF 3.

SPAN DATA

SHEET 2 OF 4.

1-4-71

STATE HIGHWAY DEPARTMENT OF GEORGIA
BRIDGE DIVISION

SPAN CARD

1 M	S (REPEAT SPAN "S")	4 L ft.	10 Bm.	T.R.s	B.R.s	CS	PN	PC	WPN	WPC	25 BEAM TYPE WF	N	G
3	1	100.0	1				3				1		

M = SPAN NUMBER. IF SPAN "M" (always give) IS IDENTICAL (symm.) TO SOME PREVIOUSLY DEFINED SPAN "S", ENTER SPAN NO. "S" UNDER S. NO FURTHER INPUT
L = SPAN LENGTH. REQUIRED FOR SPAN "M".

INDICATE BEAM TYPE WITH DIGIT ONE, 1.

BEAM TYPE:		LOAD CARDS REQUIRED
WF	WIDE FLANGE ROLLED BEAM	400, 401
N	NON-STANDARD BEAM	400, 411, 412, 413
G	GIRDER (Conc. or Steel)	400, 421, 422, 423, 424, 425

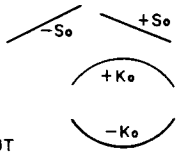

LOAD CARDS

		CODE	4 RANGE 1	11 RANGE 2	18 RANGE 3	25 RANGE 4	32 RANGE 5	39 RANGE 6	46 RANGE 7	53 RANGE 8	60 RANGE 9	67 RANGE 10	74
BEAM OR WEB	RANGE	4,0,0	10.0										ft.
	WF Bm	4,0,1	W X	W X	W X	W X	W X	W X	W X	W X	W X	W X	in. & lbs.
	NON-STD BM/WEB D	4,1,1	10.0										in.
	A	4,1,2	120.0										in.²
	I	4,1,3	9999999										in.⁴
	GIRDER WEB STEEL Sa	4,2,1											in./ft.
	Ka	4,2,2											in./ft.²
	GIRDER CONC. OR STEEL Da	4,2,3											in.
	T	4,2,4											in.
	Xa	4,2,5											ft.
TOP PLATES	R	4,3,1											ft.
	W	4,3,2											in.
	T	4,3,3											in.
BOTTOM PLATES	R	4,4,1											ft.
	W	4,4,2											in.
	T	4,4,3											in.
COMPOSITE SLAB	R	4,5,1											ft.
	W	4,5,2											in.
	T	4,5,3											in.
	e	4,5,4											in.
	As	4,5,5											in.²
NON-COMP P-LOADS	X	4,6,1	25000	50.0	75000								ft.
	X	0,0,0											ft.
	P	4,6,2	10.0	10.0	10.0								kips
	P	0,0,0											kips
COMP P-LDS	X	4,7,1											ft.
	P	4,7,2											kips
NON-COMP Wp	X	4,8,1											ft.
	W	4,8,2											kips/ft.
COMP Wp	X	4,9,1											ft.
	W	4,9,2											kips/ft.

CONTINUOUS BEAM ANALYSIS

SPAN 2 OF 3.

SPAN DATA

SHEET 3 OF 4.

1-4-71

STATE HIGHWAY DEPARTMENT OF GEORGIA
BRIDGE DIVISION

SPAN CARD

	M	S	L ft.	Bm.	T.R.s	B.R.s	CS	PN	PC	WPN	WPC	WF	N	G
1	3	2	1											

REPEAT SPAN "S"

NUMBER OF RANGES (1–10)

BEAM TYPE

M = SPAN NUMBER. IF SPAN "M" (always give) IS IDENTICAL (symm.) TO SOME PREVIOUSLY DEFINED SPAN "S", ENTER SPAN NO. "S" UNDER S. NO FURTHER INPUT
L = SPAN LENGTH. REQUIRED FOR SPAN "M".

INDICATE BEAM TYPE WITH DIGIT ONE, 1.

BEAM TYPE:		LOAD CARDS REQUIRED
WF	WIDE FLANGE ROLLED BEAM	400, 401
N	NON-STANDARD BEAM	400, 411, 412, 413
G	GIRDER (Conc. or Steel)	400, 421, 422, 423, 424, 425

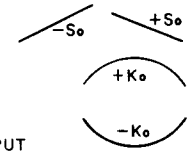

LOAD CARDS

		CODE	RANGE 1	RANGE 2	RANGE 3	RANGE 4	RANGE 5	RANGE 6	RANGE 7	RANGE 8	RANGE 9	RANGE 10	
BEAM OR WEB	RANGE	4,0,0											ft.
BEAM OR WEB	WF Bm.	4,0,1	W X	W X	W X	W X	W X	W X	W X	W X	W X	W X	in. & lbs.
BEAM OR WEB	NON-STD BM/WEB D	4,1,1											in.
BEAM OR WEB	NON-STD BM/WEB A	4,1,2											in.^{2}
BEAM OR WEB	NON-STD BM/WEB I	4,1,3											in.^{4}
BEAM OR WEB	GIRDER WEB CONC. OR STEEL So	4,2,1											in./ft.
BEAM OR WEB	GIRDER WEB CONC. OR STEEL Ko	4,2,2											in./ft.^{2}
BEAM OR WEB	GIRDER WEB CONC. OR STEEL Do	4,2,3											in.
BEAM OR WEB	GIRDER WEB CONC. OR STEEL T	4,2,4											in.
BEAM OR WEB	GIRDER WEB CONC. OR STEEL Xo	4,2,5											ft.
TOP PLATES	R	4,3,1											ft.
TOP PLATES	W	4,3,2											in.
TOP PLATES	T	4,3,3											in.
BOTTOM PLATES	R	4,4,1											ft.
BOTTOM PLATES	W	4,4,2											in.
BOTTOM PLATES	T	4,4,3											in.
COMPOSITE SLAB	R	4,5,1											ft.
COMPOSITE SLAB	W	4,5,2											in.
COMPOSITE SLAB	T	4,5,3											in.
COMPOSITE SLAB	e	4,5,4											in.
COMPOSITE SLAB	As	4,5,5											in.^{2}
NON-COMP P-LOADS	X	4,6,1											ft.
NON-COMP P-LOADS	X	0,0,0											ft.
NON-COMP P-LOADS	P	4,6,2											kips
NON-COMP P-LOADS	P	0,0,0											kips
COMP P-LDS	X	4,7,1											ft.
COMP P-LDS	P	4,7,2											kips
NON-COMP Wp	X	4,8,1											ft.
NON-COMP Wp	W	4,8,2											kips/ft.
COMP Wp	X	4,9,1											ft.
COMP Wp	W	4,9,2											kips/ft.

CONTINUOUS BEAM ANALYSIS

SPAN 3 OF 3.

SPAN DATA

SHEET 4 OF 4.

1-4-71

STATE HIGHWAY DEPARTMENT OF GEORGIA
BRIDGE DIVISION

SPAN CARD

	M	S	L ft.	Bm.	T.R.s	B.R.s	CS	PN	PC	WPN	WPC	WF	N	G
3	3	1												

REPEAT SPAN "S" — NUMBER OF RANGES — BEAM TYPE

M = SPAN NUMBER. IF SPAN "M" (always give) IS IDENTICAL (symm.) TO SOME PREVIOUSLY DEFINED SPAN "S", ENTER SPAN NO. "S" UNDER S. NO FURTHER INPUT
L = SPAN LENGTH. REQUIRED FOR SPAN "M".

INDICATE BEAM TYPE WITH DIGIT ONE, 1. LOAD CARDS REQUIRED
BEAM TYPE: WF – WIDE FLANGE ROLLED BEAM – 400, 401
N – NON-STANDARD BEAM – 400, 411, 412, 413
G – GIRDER (Conc. or Steel) – 400, 421, 422, 423, 424, 425

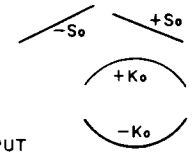

LOAD CARDS

		CODE	RANGE 1	RANGE 2	RANGE 3	RANGE 4	RANGE 5	RANGE 6	RANGE 7	RANGE 8	RANGE 9	RANGE 10	
BEAM OR WEB	RANGE	4,0,0											ft.
BEAM OR WEB	WF Bm.	4,0,1	W X	W X	W X	W X	W X	W X	W X	W X	W X	W X	in. & lbs.
BEAM OR WEB	NON-STD. BM/WEB	D 4,1,1											in.
BEAM OR WEB	NON-STD. BM/WEB	A 4,1,2											in.^{2}
BEAM OR WEB	NON-STD. BM/WEB	I 4,1,3											in.^{4}
BEAM OR WEB	GIRDER WEB STEEL	So 4,2,1											in./ft.
BEAM OR WEB	GIRDER WEB STEEL	Ko 4,2,2											in./ft.^{2}
BEAM OR WEB	GIRDER WEB CONC. OR STEEL	Do 4,2,3											in.
BEAM OR WEB	GIRDER WEB CONC. OR STEEL	T 4,2,4											in.
BEAM OR WEB	GIRDER WEB CONC. OR STEEL	Xo 4,2,5											ft.
TOP PLATES		R 4,3,1											ft.
TOP PLATES		W 4,3,2											in.
TOP PLATES		T 4,3,3											in.
BOTTOM PLATES		R 4,4,1											ft.
BOTTOM PLATES		W 4,4,2											in.
BOTTOM PLATES		T 4,4,3											in.
COMPOSITE SLAB		R 4,5,1											ft.
COMPOSITE SLAB		W 4,5,2											in.
COMPOSITE SLAB		T 4,5,3											in.
COMPOSITE SLAB		e 4,5,4											in.
COMPOSITE SLAB		As 4,5,5											in.^{2}
NON-COMP. P-LOADS		X 4,6,1											ft.
NON-COMP. P-LOADS		X 0,0,0											ft.
NON-COMP. P-LOADS		P 4,6,2											kips
NON-COMP. P-LOADS		P 0,0,0											kips
COMP. P-LDS		X 4,7,1											ft.
COMP. P-LDS		P 4,7,2											kips
NON-COMP. Wp		X 4,8,1											ft.
NON-COMP. Wp		W 4,8,2											kips/ft.
COMP. Wp		X 4,9,1											ft.
COMP. Wp		W 4,9,2											kips/ft.

STATE HIGHWAY DEPARTMENT OF GEORGIA

BRIDGE DIVISION

01/19/71 THE ANALYSIS OF CONTINUOUS BEAMS FOR HIGHWAY BRIDGES PROB. NO. EX.1

EXAMPLE NO.1 100-100-100 CONTINUOUS UNIT CONSTANT CROSS SECTION CONT

NOT AN ACTUAL DESIGN

BEAM CONSTANTS

BEAM IDENTITY	NO. OF SPANS	LIVE LOAD CLASS	BEAM TYPE	WDLNC	WDLC	WSW	WG	F	BM.SPAC.	SZR
EXAMPLE NO.1	3	HS20	NONC.ST'L.INT.	1.000	0.0	1.000	120.0	1.00	0.0	0.0

OPTIONAL BEAM CONSTANTS

DFM	DFVE	DFD	N	3N	LIVE LOAD USED	STRESS CYCLES	FY	FU	FC	FS
2.0000	2.0000	2.0000	0	0	TR'K LANE MIL.	500000	36.000	58.000	0.0	0.0

SPAN 1 INPUT DATA

M	S	L	* NUMBER OF RANGES								* BEAM SECTION TYPE
			BM	TPL	BPL	CS	PN	PC	PWN	PWC	
1	0	100.000	1	0	0	0	3	0	0	0	NSTD

BEAM SECTION AND LOADS

CODE	RANGE 1	RANGE 2	RANGE 3	RANGE 4	RANGE 5	RANGE 6	RANGE 7	RANGE 8	RANGE 9	RANGE 10
400	100.000									
411	100.000									
412	1200.000									
413	999999.9									
461	25.000	50.000	75.000							
462	10.000	10.000	10.000							

EXAMPLE NO.1 SPAN 2 INPUT DATA SAME AS SPAN 1 INPUT DATA

SPAN 3 INPUT DATA SAME AS SPAN 1 INPUT DATA

EXAMPLE NO.1

BEAM SECTION PROPERTIES AT SPAN TWENTIETH POINTS

S.PT	D.WEB	I	SM.BS	SM.TS	SM.TC	Q/I	S.PT	D.WEB	I	SM.BS	SM.TS	SM.TC	Q/I
1.00	100.00	999999.9	20000.0	20000.0	0.0	0.0	1.05	100.00	999999.9	20000.0	20000.0	0.0	0.0
1.10	100.00	999999.9	20000.0	20000.0	0.0	0.0	1.15	100.00	999999.9	20000.0	20000.0	0.0	0.0
1.20	100.00	999999.9	20000.0	20000.0	0.0	0.0	1.25	100.00	999999.9	20000.0	20000.0	0.0	0.0
1.30	100.00	999999.9	20000.0	20000.0	0.0	0.0	1.35	100.00	999999.9	20000.0	20000.0	0.0	0.0
1.40	100.00	999999.9	20000.0	20000.0	0.0	0.0	1.45	100.00	999999.9	20000.0	20000.0	0.0	0.0
1.50	100.00	999999.9	20000.0	20000.0	0.0	0.0	1.55	100.00	999999.9	20000.0	20000.0	0.0	0.0
1.60	100.00	999999.9	20000.0	20000.0	0.0	0.0	1.65	100.00	999999.9	20000.0	20000.0	0.0	0.0
1.70	100.00	999999.9	20000.0	20000.0	0.0	0.0	1.75	100.00	999999.9	20000.0	20000.0	0.0	0.0
1.80	100.00	999999.9	20000.0	20000.0	0.0	0.0	1.85	100.00	999999.9	20000.0	20000.0	0.0	0.0
1.90	100.00	999999.9	20000.0	20000.0	0.0	0.0	1.95	100.00	999999.9	20000.0	20000.0	0.0	0.0
2.00	100.00	999999.9	20000.0	20000.0	0.0	0.0							
							2.05	100.00	999999.9	20000.0	20000.0	0.0	0.0
2.10	100.00	999999.9	20000.0	20000.0	0.0	0.0	2.15	100.00	999999.9	20000.0	20000.0	0.0	0.0
2.20	100.00	999999.9	20000.0	20000.0	0.0	0.0	2.25	100.00	999999.9	20000.0	20000.0	0.0	0.0
2.30	100.00	999999.9	20000.0	20000.0	0.0	0.0	2.35	100.00	999999.9	20000.0	20000.0	0.0	0.0
2.40	100.00	999999.9	20000.0	20000.0	0.0	0.0	2.45	100.00	999999.9	20000.0	20000.0	0.0	0.0
2.50	100.00	999999.9	20000.0	20000.0	0.0	0.0	2.55	100.00	999999.9	20000.0	20000.0	0.0	0.0
2.60	100.00	999999.9	20000.0	20000.0	0.0	0.0	2.65	100.00	999999.9	20000.0	20000.0	0.0	0.0
2.70	100.00	999999.9	20000.0	20000.0	0.0	0.0	2.75	100.00	999999.9	20000.0	20000.0	0.0	0.0
2.80	100.00	999999.9	20000.0	20000.0	0.0	0.0	2.85	100.00	999999.9	20000.0	20000.0	0.0	0.0
2.90	100.00	999999.9	20000.0	20000.0	0.0	0.0	2.95	100.00	999999.9	20000.0	20000.0	0.0	0.0
3.00	100.00	999999.9	20000.0	20000.0	0.0	0.0							
							3.05	100.00	999999.9	20000.0	20000.0	0.0	0.0
3.10	100.00	999999.9	20000.0	20000.0	0.0	0.0	3.15	100.00	999999.9	20000.0	20000.0	0.0	0.0
3.20	100.00	999999.9	20000.0	20000.0	0.0	0.0	3.25	100.00	999999.9	20000.0	20000.0	0.0	0.0
3.30	100.00	999999.9	20000.0	20000.0	0.0	0.0	3.35	100.00	999999.9	20000.0	20000.0	0.0	0.0
3.40	100.00	999999.9	20000.0	20000.0	0.0	0.0	3.45	100.00	999999.9	20000.0	20000.0	0.0	0.0
3.50	100.00	999999.9	20000.0	20000.0	0.0	0.0	3.55	100.00	999999.9	20000.0	20000.0	0.0	0.0
3.60	100.00	999999.9	20000.0	20000.0	0.0	0.0	3.65	100.00	999999.9	20000.0	20000.0	0.0	0.0
3.70	100.00	999999.9	20000.0	20000.0	0.0	0.0	3.75	100.00	999999.9	20000.0	20000.0	0.0	0.0
3.80	100.00	999999.9	20000.0	20000.0	0.0	0.0	3.85	100.00	999999.9	20000.0	20000.0	0.0	0.0
3.90	100.00	999999.9	20000.0	20000.0	0.0	0.0	3.95	100.00	999999.9	20000.0	20000.0	0.0	0.0
4.00	100.00	999999.9	20000.0	20000.0	0.0	0.0							

SPAN PROPERTIES

SPAN	DL	KL	KLM	CLR	CLRM	CRLM	CRL	KRM	KR	DR
1	1.000000	0.416669	0.360579	0.499999	0.266667	0.0	0.500001	0.312500	0.416667	0.466666
2	0.533334	0.416669	0.357145	0.499999	0.250000	0.250000	0.500001	0.357143	0.416667	0.533332
3	0.466668	0.416669	0.312502	0.499999	0.0	0.266667	0.500001	0.360577	0.416667	1.000000

EXAMPLE NO.1 MOMENTS(KIP-FEET) AT SPAN TENTH AND MISC. POINTS

*	NON-COMPOSITE DEAD LOADS					*	COMPOSITE DEAD LOADS				*	LIVE LOADS				*	TOTALS	
S.P	BEAM	PN	WDLNC	WPN	TOT.NC	*	PC	WDLC	WPC	TOT.C	*	SWK.+	SWK.-	LL+I +	LL+I -	*	MAX.+	MAX.-
1.1	350.0	112.5	350.0	-0.0	812.5		0.0	0.0	0.0	0.0		400.0	-50.0	667.5 T	-67.4 T		1880.0	695.1
1.2	600.0	225.0	600.0	-0.0	1425.0		0.0	0.0	0.0	0.0		700.0	-100.0	1121.8 T	-134.8 T		3246.8	1190.2
1.3	750.0	287.5	750.0	-0.0	1787.5		0.0	0.0	0.0	0.0		900.0	-150.0	1379.5 T	-202.2 T		4067.0	1435.3
1.4	800.0	300.0	800.0	-0.0	1900.0		0.0	0.0	0.0	0.0		1000.0	-200.0	1486.1 T	-269.6 T		4386.1	1430.4
1.5	750.0	312.5	750.0	-0.0	1812.5		0.0	0.0	0.0	0.0		1000.0	-250.0	1449.9 T	-337.0 T		4262.4	1225.5
1.6	600.0	225.0	600.0	-0.0	1425.0		0.0	0.0	0.0	0.0		900.0	-300.0	1291.7 T	-404.4 T		3616.7	720.7
1.7	350.0	137.5	350.0	-0.0	837.5		0.0	0.0	0.0	0.0		700.0	-350.0	1002.2 T	-471.7 T		2539.7	15.8
1.8	-0.0	0.0	0.0	-0.0	0.0		0.0	0.0	0.0	0.0		402.0	-402.0	616.0 T	-539.1 T		1017.9	-941.1
1.9	-450.0	-187.5	-450.0	-0.0	-1087.5		0.0	0.0	0.0	0.0		204.1	-654.0	267.3 L	-760.5 L		-616.1	-2502.0
2.0	-1000.0	-375.0	-1000.0	0.0	-2375.0		0.0	0.0	0.0	0.0		166.7	-1166.7	216.9 T	-1313.9 L		-1991.5	-4855.5
2.1	-550.0	-225.0	-550.0	-0.0	-1325.0		0.0	0.0	0.0	0.0		151.6	-701.6	269.7 M	-803.0 L		-903.6	-2829.6
2.2	-200.0	-75.0	-200.0	-0.0	-475.0		0.0	0.0	0.0	0.0		300.0	-500.0	653.7 T	-650.6 T		478.7	-1625.6
2.3	50.0	25.0	50.0	-0.0	125.0		0.0	0.0	0.0	0.0		550.0	-500.0	978.1 T	-560.1 L		1653.1	-935.1
2.4	200.0	75.0	200.0	-0.0	475.0		0.0	0.0	0.0	0.0		700.0	-500.0	1175.3 T	-560.1 L		2350.3	-585.1
2.5	250.0	125.0	250.0	-0.0	625.0		0.0	0.0	0.0	0.0		750.0	-500.0	1227.1 T	-560.1 L		2602.1	-435.1
2.6	200.0	75.0	200.0	-0.0	475.0		0.0	0.0	0.0	0.0		700.0	-500.0	1175.3 T	-560.1 L		2350.3	-585.1
2.7	50.0	25.0	50.0	-0.0	125.0		0.0	0.0	0.0	0.0		550.0	-500.0	978.1 T	-560.1 L		1653.1	-935.0
2.8	-200.0	-75.0	-200.0	-0.0	-475.0		0.0	0.0	0.0	0.0		300.0	-500.0	653.7 T	-650.6 T		478.7	-1625.6
2.9	-550.0	-225.0	-550.0	-0.0	-1325.0		0.0	0.0	0.0	0.0		151.6	-701.6	269.7 M	-803.0 L		-903.6	-2829.6
3.0	-1000.0	-375.0	-1000.0	0.0	-2375.0		0.0	0.0	0.0	0.0		166.7	-1166.7	216.9 T	-1313.9 L		-1991.5	-4855.5
3.1	-450.0	-187.5	-450.0	-0.0	-1087.5		0.0	0.0	0.0	0.0		204.1	-654.0	267.3 L	-760.5 L		-616.1	-2502.0
3.2	-0.0	0.0	0.0	-0.0	0.0		0.0	0.0	0.0	0.0		402.0	-402.0	616.0 T	-539.1 T		1017.9	-941.1
3.3	350.0	137.5	350.0	-0.0	837.5		0.0	0.0	0.0	0.0		700.0	-350.0	1002.2 T	-471.8 T		2539.7	15.7
3.4	600.0	225.0	600.0	-0.0	1425.0		0.0	0.0	0.0	0.0		900.0	-300.0	1291.7 T	-404.4 T		3616.7	720.6
3.5	750.0	312.5	750.0	-0.0	1812.5		0.0	0.0	0.0	0.0		1000.0	-250.0	1449.9 T	-337.0 T		4262.4	1225.5
3.6	800.0	300.0	800.0	-0.0	1900.0		0.0	0.0	0.0	0.0		1000.0	-200.0	1486.1 T	-269.6 T		4386.1	1430.4
3.7	750.0	287.5	750.0	-0.0	1787.5		0.0	0.0	0.0	0.0		900.0	-150.0	1379.5 T	-202.2 T		4067.0	1435.3
3.8	600.0	225.0	600.0	-0.0	1425.0		0.0	0.0	0.0	0.0		700.0	-100.0	1121.8 T	-134.8 T		3246.8	1190.2
3.9	350.0	112.5	350.0	-0.0	812.5		0.0	0.0	0.0	0.0		400.0	-50.0	667.5 T	-67.4 T		1880.0	695.1

EXAMPLE NO.1 STRESSES AT SPAN TENTH AND MISCELLANEOUS POINTS

	* ACTUAL STRESSES(PSI)									* ALLOWABLE FATIGUE STRESSES(PSI)								
	TOTAL DEAD LOAD			D.L. + L.L. POS.			D.L. + L.L. NEG.			* BASE METAL		BASE M. ADJ.		BASE M. ADJ.		BASE M. ADJ.		FLANGE
	TOP	TOP	BOT.	TOP	TOP	BOT.	TOP	TOP	BOT.	TOP	BOT.	FILLET WELD		CON.FIL.WELD		BUTT WELD		W STUD
S.PT.	CONC.	STEEL	STEEL	CONC.	STEEL	STEEL	CONC.	STEEL	STEEL	STEEL	STEEL	TOP S	BOT.S	TOP S	BOT.S	TOP S	BOT.S	TOP S
1.100	0	487	-487	0	1128	-1128	0	417	-417	20000	20000	19832	19832	20000	20000	20000	-20000	20000
1.200	0	854	-854	0	1948	-1948	0	714	-714	20000	20000	19734	19734	20000	20000	20000	-20000	20000
1.300	0	1072	-1072	0	2440	-2440	0	861	-861	20000	20000	19317	19317	20000	20000	20000	-20000	20000
1.400	0	1139	-1139	0	2631	-2631	0	858	-858	20000	20000	18549	18549	20000	20000	20000	-20000	20000
1.500	0	1087	-1087	0	2557	-2557	0	735	-735	20000	20000	17544	17544	20000	20000	20000	-20000	20000
1.600	0	855	-855	0	2170	-2170	0	432	-432	20000	20000	15610	15610	20000	20000	20000	-19624	20000
1.700	0	502	-502	0	1523	-1523	0	9	-9	20000	20000	12578	12578	20000	20000	20000	-17266	20000
1.800	0	0	0	0	610	-610	0	-564	564	18705	18705	6495	6495	14289	14289	10989	-10933	20000
1.900	0	-652	652	0	-369	369	0	-1501	1501	20000	20000	16583	16583	20000	20000	-20000	20000	20000
2.000	0	-1424	1424	0	-1194	1194	0	-2913	2913	20000	20000	20000	20000	20000	20000	-20000	20000	20000
2.100	0	-794	794	0	-542	542	0	-1697	1697	20000	20000	18364	18364	20000	20000	-20000	20000	20000
2.200	0	-284	284	0	287	-287	0	-975	975	20000	20000	9656	9656	20000	20000	-14544	15858	20000
2.300	0	75	-75	0	991	-991	0	-561	561	20000	20000	7983	7983	17564	17564	13319	-12734	20000
2.400	0	285	-285	0	1410	-1410	0	-351	351	20000	20000	10008	10008	20000	20000	16383	-14900	20000
2.500	0	375	-375	0	1561	-1561	0	-261	261	20000	20000	10709	10709	20000	20000	17417	-15584	20000
2.600	0	285	-285	0	1410	-1410	0	-351	351	20000	20000	10008	10008	20000	20000	16383	-14900	20000
2.700	0	75	-75	0	991	-991	0	-561	561	20000	20000	7983	7983	17564	17564	13319	-12734	20000
2.800	0	-284	284	0	287	-287	0	-975	975	20000	20000	9656	9656	20000	20000	-14544	15858	20000
2.900	0	-794	794	0	-542	542	0	-1697	1697	20000	20000	18364	18364	20000	20000	-20000	20000	20000
3.000	0	-1424	1424	0	-1194	1194	0	-2913	2913	20000	20000	20000	20000	20000	20000	-20000	20000	20000
3.100	0	-652	652	0	-369	369	0	-1501	1501	20000	20000	16583	16583	20000	20000	-20000	20000	20000
3.200	0	0	0	0	610	-610	0	-564	564	18705	18705	6495	6495	14289	14289	10989	-10933	20000
3.300	0	502	-502	0	1523	-1523	0	9	-9	20000	20000	12577	12577	20000	20000	20000	-17266	20000
3.400	0	855	-855	0	2170	-2170	0	432	-432	20000	20000	15610	15610	20000	20000	20000	-19624	20000
3.500	0	1087	-1087	0	2557	-2557	0	735	-735	20000	20000	17544	17544	20000	20000	20000	-20000	20000
3.600	0	1139	-1139	0	2631	-2631	0	858	-858	20000	20000	18549	18549	20000	20000	20000	-20000	20000
3.700	0	1072	-1072	0	2440	-2440	0	861	-861	20000	20000	19317	19317	20000	20000	20000	-20000	20000
3.800	0	854	-854	0	1948	-1948	0	714	-714	20000	20000	19734	19734	20000	20000	20000	-20000	20000
3.900	0	487	-487	0	1128	-1128	0	417	-417	20000	20000	19832	19832	20000	20000	20000	-20000	20000

EXAMPLE NO.1 STRESSES AT SPAN TENTH AND MISCELLANEOUS POINTS

	* ACTUAL STRESSES(PSI)									* ALLOWABLE FATIGUE STRESSES(PSI)								
	TOTAL DEAD LOAD			D.L. + L.L. POS.			D.L. + L.L. NEG.			* BASE METAL		BASE M. ADJ.		BASE M. ADJ.		BASE M. ADJ.		FLANGE
	TOP	TOP	BOT.	TOP	TOP	BOT.	TOP	TOP	BOT.	TOP	BOT.	FILLET WELD		CON.FIL.WELD		BUTT WELD		W STUD
S.PT.	CONC.	STEEL	STEEL	CONC.	STEEL	STEEL	CONC.	STEEL	STEEL	STEEL	STEEL	TOP S	BOT.S	TOP S	BOT.S	TOP S	BOT.S	TOP S

EXAMPLE NO.1 SHEARS(KIPS) AND SHEAR CONNECTOR SPACINGS(INCHES) AT SPAN TENTH POINTS AND REACTIONS(KIPS)

	DEAD LOADS						*	LIVE LOADS			* MAXIMUM	LL SHEAR	SHEAR
S.PT	BEAM	PN	WN	WPN	TOT.C	TOT.DL *	SWK.+	SWK.-	LL+I +	LL+I - *	V OR R	RANGE	CON.SP.
1.00	40.000	11.250	40.000	0.0	0.0	91.250	45.000	-5.000	77.685 T	-7.168 T	213.935		
1.10	30.000	11.250	30.000	-0.0	0.0	71.250	35.633	-5.633	67.316 T	-8.959 L	174.199		
1.20	20.000	11.250	20.000	-0.0	0.0	51.250	27.523	-7.523	57.086 T	-14.749 L	135.859		
1.30	10.000	1.250	10.000	-0.0	0.0	21.250	20.646	-10.646	47.126 T	-24.155 T	89.022		
1.40	-0.000	1.250	0.000	-0.0	0.0	1.250	14.963	-14.963	37.570 T	-35.444 T	53.783		
1.50	-10.000	-8.750	-10.000	-0.0	0.0	-28.750	10.417	-20.417	28.560 T	-45.766 T	-94.933		
1.60	-20.000	-8.750	-20.000	-0.0	0.0	-48.750	6.936	-26.936	20.194 T	-55.204 T	-130.889		
1.70	-30.000	-8.750	-30.000	-0.0	0.0	-68.750	4.433	-34.433	12.549 T	-63.746 T	-166.929		
1.80	-40.000	-18.750	-40.000	-0.0	0.0	-98.750	2.803	-42.803	6.787 M	-71.296 T	-212.849		
1.90	-50.000	-18.750	-50.000	-0.0	0.0	-118.750	1.926	-51.926	3.441 L	-77.753 T	-248.429		
2.00	-60.000	-18.750	-60.000	-0.0	0.0	-138.750	1.667	-61.667	1.387 L	-83.012 T	-283.428		
R1-2	110.000	33.750	110.000	0.0	0.0	253.750	120.000		125.821 L		499.571		
2.00	50.000	15.000	50.000	0.0	0.0	115.000	58.333	-8.333	81.192 T	-11.534 T	254.525		
2.10	40.000	15.000	40.000	-0.0	0.0	95.000	48.698	-8.698	73.956 T	-11.563 L	217.654		
2.20	30.000	15.000	30.000	-0.0	0.0	75.000	39.907	-9.907	65.544 T	-13.921 L	180.450		
2.30	20.000	5.000	20.000	-0.0	0.0	45.000	32.098	-12.098	56.270 T	-19.259 L	133.368		
2.40	10.000	5.000	10.000	-0.0	0.0	25.000	25.373	-15.373	46.458 T	-26.492 T	96.831		
2.50	-0.000	-5.000	0.0	-0.0	0.0	-5.000	19.792	-19.792	36.439 T	-36.439 T	-61.231		
2.60	-10.000	-5.000	-10.000	-0.0	0.0	-25.000	15.373	-25.373	26.492 T	-46.458 T	-96.832		
2.70	-20.000	-5.000	-20.000	-0.0	0.0	-45.000	12.098	-32.098	19.259 L	-56.270 T	-133.368		
2.80	-30.000	-15.000	-30.000	-0.0	0.0	-75.000	9.907	-39.907	13.921 L	-65.544 T	-180.450		
2.90	-40.000	-15.000	-40.000	-0.0	0.0	-95.000	8.698	-48.698	11.563 L	-73.956 T	-217.655		
3.00	-50.000	-15.000	-50.000	-0.0	0.0	-115.000	8.333	-58.333	11.534 T	-81.192 T	-254.525		
R2-3	110.000	33.750	110.000	0.0	0.0	253.750	120.000		125.821 L		499.571		
3.00	60.000	18.750	60.000	0.0	0.0	138.750	61.667	-1.667	83.012 T	-1.387 L	283.428		
3.10	50.000	18.750	50.000	-0.0	0.0	118.750	51.926	-1.926	77.753 T	-3.441 L	248.428		
3.20	40.000	18.750	40.000	-0.0	0.0	98.750	42.803	-2.803	71.296 T	-6.787 M	212.849		
3.30	30.000	8.750	30.000	-0.0	0.0	68.750	34.433	-4.433	63.746 T	-12.549 T	166.929		
3.40	20.000	8.750	20.000	-0.0	0.0	48.750	26.936	-6.936	55.203 T	-20.194 T	130.889		
3.50	10.000	-1.250	10.000	-0.0	0.0	18.750	20.417	-10.417	45.766 T	-28.560 T	84.932		
3.60	-0.000	-1.250	-0.000	-0.0	0.0	-1.250	14.963	-14.963	35.444 T	-37.570 T	-53.783		
3.70	-10.000	-1.250	-10.000	-0.0	0.0	-21.250	10.646	-20.646	24.155 T	-47.126 T	-89.022		
3.80	-20.000	-11.250	-20.000	-0.0	0.0	-51.250	7.523	-27.523	14.749 L	-57.086 T	-135.859		
3.90	-30.000	-11.250	-30.000	-0.0	0.0	-71.250	5.633	-35.633	8.959 L	-67.317 T	-174.200		
4.00	-40.000	-11.250	-40.000	-0.0	0.0	-91.250	5.000	-45.000	7.168 T	-77.685 T	-213.935		

SPAN 1 V LANE = 35.200 V 14 FT. = 32.206 SPAN 3 V LANE = 35.200 V 14 FT. = 32.206

EXAMPLE NO.1

DEAD LOAD DEFLECTIONS(INCHES) AT SPAN TWENTIETH POINTS

S.PT	BEAM	PN	WN	WPN	TOT.NC	TOT.C	TOT.DL	S.PT	BEAM	PN	WN	WPN	TOT.NC	TOT.C	TOT.DL
1.05	0.215	0.081	0.215	0.0	0.510	0.0	0.510	1.10	0.421	0.159	0.421	0.0	1.001	0.0	1.001
1.15	0.613	0.232	0.613	0.0	1.458	0.0	1.458	1.20	0.783	0.298	0.783	0.0	1.865	0.0	1.865
1.25	0.928	0.354	0.928	0.0	2.211	0.0	2.211	1.30	1.043	0.399	1.043	0.0	2.485	0.0	2.485
1.35	1.126	0.431	1.126	0.0	2.683	0.0	2.683	1.40	1.175	0.450	1.175	0.0	2.800	0.0	2.800
1.45	1.189	0.457	1.189	0.0	2.836	0.0	2.836	1.50	1.170	0.450	1.170	0.0	2.790	0.0	2.790
1.55	1.118	0.430	1.118	0.0	2.666	0.0	2.666	1.60	1.037	0.399	1.037	0.0	2.472	0.0	2.472
1.65	0.930	0.357	0.930	0.0	2.216	0.0	2.216	1.70	0.801	0.308	0.801	0.0	1.911	0.0	1.911
1.75	0.658	0.253	0.658	0.0	1.569	0.0	1.569	1.80	0.507	0.194	0.507	0.0	1.208	0.0	1.208
1.85	0.356	0.136	0.356	0.0	0.847	0.0	0.847	1.90	0.214	0.081	0.214	0.0	0.509	0.0	0.509
1.95	0.091	0.034	0.091	0.0	0.217	0.0	0.217								
2.05	-0.052	-0.019	-0.052	0.0	-0.124	0.0	-0.124	2.10	-0.071	-0.026	-0.071	0.0	-0.168	0.0	-0.168
2.15	-0.067	-0.023	-0.067	0.0	-0.156	0.0	-0.156	2.20	-0.046	-0.013	-0.046	0.0	-0.105	0.0	-0.105
2.25	-0.017	0.000	-0.017	0.0	-0.034	0.0	-0.034	2.30	0.015	0.013	0.015	0.0	0.044	0.0	0.044
2.35	0.045	0.026	0.045	0.0	0.116	0.0	0.116	2.40	0.069	0.036	0.069	0.0	0.174	0.0	0.174
2.45	0.085	0.042	0.085	0.0	0.212	0.0	0.212	2.50	0.090	0.045	0.090	0.0	0.225	0.0	0.225
2.55	0.085	0.042	0.085	0.0	0.212	0.0	0.212	2.60	0.069	0.036	0.069	0.0	0.174	0.0	0.174
2.65	0.045	0.026	0.045	0.0	0.116	0.0	0.116	2.70	0.015	0.013	0.015	0.0	0.044	0.0	0.044
2.75	-0.017	0.000	-0.017	0.0	-0.034	0.0	-0.034	2.80	-0.046	-0.013	-0.046	0.0	-0.105	0.0	-0.105
2.85	-0.067	-0.023	-0.067	0.0	-0.156	0.0	-0.156	2.90	-0.071	-0.026	-0.071	0.0	-0.168	0.0	-0.168
2.95	-0.052	-0.019	-0.052	0.0	-0.124	0.0	-0.124								
3.05	0.091	0.034	0.091	0.0	0.217	0.0	0.217	3.10	0.214	0.081	0.214	0.0	0.509	0.0	0.509
3.15	0.356	0.136	0.356	0.0	0.847	0.0	0.847	3.20	0.507	0.194	0.507	0.0	1.208	0.0	1.208
3.25	0.658	0.253	0.658	0.0	1.569	0.0	1.569	3.30	0.801	0.308	0.801	0.0	1.911	0.0	1.911
3.35	0.930	0.357	0.930	0.0	2.216	0.0	2.216	3.40	1.037	0.399	1.037	0.0	2.472	0.0	2.472
3.45	1.118	0.430	1.118	0.0	2.666	0.0	2.666	3.50	1.170	0.450	1.170	0.0	2.790	0.0	2.790
3.55	1.189	0.457	1.189	0.0	2.836	0.0	2.836	3.60	1.175	0.450	1.175	0.0	2.800	0.0	2.800
3.65	1.126	0.431	1.126	0.0	2.683	0.0	2.683	3.70	1.043	0.399	1.043	0.0	2.485	0.0	2.485
3.75	0.928	0.354	0.928	0.0	2.211	0.0	2.211	3.80	0.783	0.298	0.783	0.0	1.865	0.0	1.865
3.85	0.613	0.232	0.613	0.0	1.458	0.0	1.458	3.90	0.421	0.159	0.421	0.0	1.001	0.0	1.001
3.95	0.215	0.081	0.215	0.0	0.510	0.0	0.510								

LIVE LOAD DEFLECTIONS(INCHES)

SPAN	AT	LANE	TRUCK	MIL.	SIDEWALK	L/800
1	0.500 L	1.892	2.101	1.478	1.710	1.500
2	0.500 L	1.351	1.639	1.162	1.170	1.500
3	0.500 L	1.892	2.101	1.478	1.710	1.500

EXAMPLE NO. 1: COMMENTS

In this example the uniform superimposed dead load has been set equal to the weight of the beam. An inspection of the output data reveals that the effects of these two loads are the same which is as it should be. However, the effects of these loads were computed by two different methods. Since the sidewalk live load was set equal to the uniform dead load and beam weight, the sum of the negative and positive effects of the sidewalk will equal the beam and uniform dead load effects. This proves to be the case and gives a third independent check on the accuracy of the results.

In the problem the stresses are of no consequence, so the input stresses and live load cycles are ignored. The live loads considered will be one truck (and equivalent lane) and/or military. A whole lane gives a distribution factor of two (2.0). Since the distribution factors are given, the beam spacing and Int./Ext. beam type are not required. The shear connector value ($\sum Zr$) and uniform composite dead load (WDLc) are not required since the beam is non-composite. In addition, the modular ratio (n) is not involved in this problem. The beam is designated as steel although it could have been designated as concrete just as conveniently.

In the Span Data input, a non-standard beam type is indicated and the properties (depth, area, moment of inertia) are given. It should be noted that the beam could also be designated as a girder type and the following values given instead of the depth, area and moment of inertia.

$S_o = 0.0$; $K_o = 0.0$; $D_o = 100.0$; $T = 12.0$; $X_o = 0.0$

Spans two and three are symmetrical with span one so they are defined as such. This saves time when entering the input data on the forms.

EXAMPLE NO. 2 : 45 - 60 - 45 CONTINUOUS WELDED PLATE GIRDER

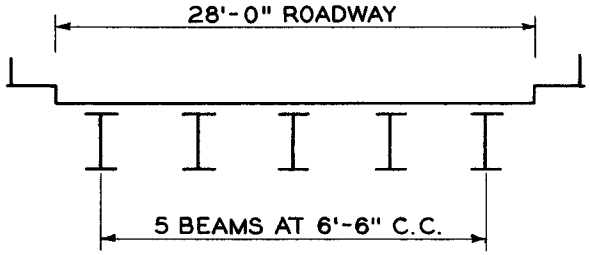

BRIDGE CROSS SECTION

INVESTIGATE FIRST INTERIOR BEAM

DEAD LOADS :

SLAB	=	488
FUTURE PAVING	=	97
SIDEWALK & RAILING	=	215
$W_{DL\,nc}$	=	$800^{LB}/_{FT}$

$W_G = 490.0^{LB}/_{FT^3}$

LIVE LOAD : H20, NO MILITARY

$D^F{}_D = 2(2)/5 = 0.80$; $D^F{}_{Ve} = D^F{}_M$

GIVEN: A36 steel

$W_{SW} = 100^{LB}/_{FT}$

2,000,000 Max. stress cycles.

$E = 29.00 \quad 10^{6\,LB}/_{IN^2}$

THERE ARE TWO CONCENTRATED LOADS, 1000 LB. EACH, AT THE THIRD POINTS IN EACH SPAN.

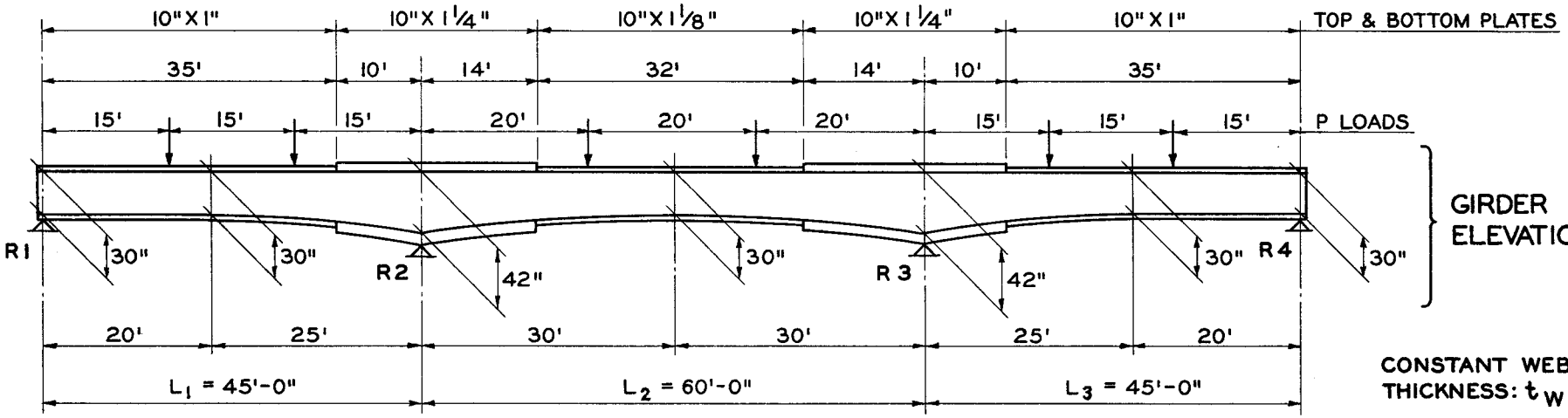

CONSTANT WEB THICKNESS: $t_W = 5/8"$

SPAN 1

2 RANGES :

$K_{01} = 0, \; S_{01} = S_{02} = 0$

$K_{02} = \frac{12}{25^2} = 0.0192000$

$X_{02} = 20.000$ FT.

$X_{01} = 0$

SPAN 2

1 RANGE :

$K_{01} = \frac{12}{30^2} = 0.0133333$

$X_{01} = 30.000$ FT.

$S_{01} = 0$

SPAN 3

2 RANGES :

$K_{01} = \frac{12}{25^2} = 0.0192000$

$X_{01} = 25.000$ FT.

$K_{02} = 0, \; S_{01} = S_{02} = 0$

$X_{02} = 25.000$ FT.

VARIABLE WEB DEPTH

CONTINUOUS BEAM ANALYSIS

SHEET 1 OF 4

DESIGN DATA

IDENTIFICATION

ENTER "CONT" IF ADDITIONAL CARD OF REMARKS IS USED.

	PGM.	PROB. NO.	REMARKS, PROJECT NUMBER, DATE, COUNTY, NAME, ETC.
*	B.O.I	EX. 2	EXAMPLE NO. 2 45-60-45 CONTINUOUS WELDED PLATE GIRDER
*			

BEAM CONSTANTS

"I" = NON-COMP. BM.
"O" = COMP. BM.

	BEAM IDENTITY	Ns	℄ CLASS	TYPE	WDLnc	WDLc	Wsw	WG	E	BM. SPAC.	Σ Zr
1	EXAMPLE NO. 2	3	H 20	1 0 0	0.800	.	0.100	490.0	29.00	6.500	.

"I" = CONC. BM.
"O" = STEEL BM.

"I" = EXT. BM.
"O" = INT. BM.

OPTIONAL BEAM CONSTANTS

	D^F_M	D^F_{Ve}	D^F_D	n = Es/Ec 1n	3n	℄ SKIP T	L	M	NO. ℄ CYCLES	Fy	Fu	Fc	Fs
2	.	.	0.800			1			2,000,000	36.000	58.000	.	.

Fy & Fu NOT REQUIRED WITH CONCRETE BEAM.
Fc & Fs NOT REQUIRED WITH STEEL BEAM.

BEAM CONSTANTS

BEAM IDENTITY – BEAM NAME, i.e., Bm. A LT.

Ns – NUMBER OF SPANS ($2 \leq Ns \leq 8$).

℄ CLASS – A.A.S.H.O. ℄ DESIGNATION, HS 20, H15, etc.

W_{DLnc} – UNIFORM NON-COMPOSITE DEAD LOAD, kips/ft.

W_{DLc} – UNIFORM COMPOSITE DEAD LOAD, kips/ft.

Wsw – UNIFORM SIDEWALK LIVE LOAD, kips/ft.

W_G – UNIT WEIGHT OF BEAM MATERIAL, lbs./ft.^{3}

E – MODULUS OF ELASTICITY OF BEAM MATERIAL, million lbs./in.^{2}

BM. SPAC. – BEAM SPACING, ft.

Σ Zr – SHEAR CONNECTOR CAPACITY, ONE TRANSVERSE ROW, kips.

DO NOT INCLUDE BEAM WEIGHT IN W_{DLnc}.

OPTIONAL BEAM CONSTANTS

D^F_M – DISTRIBUTION FACTOR FOR MOMENT, SHEAR.

D^F_{Ve} – DISTRIBUTION FACTOR FOR END SHEAR.

D^F_D – DISTRIBUTION FACTOR FOR ℄ DEFLECTIONS.

n – MODULAR RATIO SHORT (1n) AND LONG (3n) TERM VALUES. (10 and 30 assumed if not given)

℄ SKIP – ENTER DIGIT "1" TO SKIP TRUCK (T), LANE (L), OR MILITARY (M) LIVE LOAD.

	VALUES ASSUMED IF NOT GIVEN
NO. ℄ CYCLES – NUMBER CYCLES MAXIMUM STRESS.	500,000
Fy – MIN. YIELD STRENGTH BEAM MATERIAL, kips/in.^{2}	36.0
Fu – MIN. TENSILE STRENGTH BEAM MATERIAL, kips/in.^{2}	58.0
Fc – ALLOWABLE CONCRETE FLEXURE STRESS, kips/in.^{2}	1.200
Fs – ALLOWABLE REINFORCING STEEL STRESS, kips/in.^{2}	20.0

STATE HIGHWAY DEPARTMENT OF GEORGIA
BRIDGE DIVISION

1-4-71

CONTINUOUS BEAM ANALYSIS

SPAN 1 OF 3.

SPAN DATA

SHEET 2 OF 4.

1-4-71

STATE HIGHWAY DEPARTMENT OF GEORGIA
BRIDGE DIVISION

SPAN CARD

M	S (REPEAT SPAN "S")	L ft.	Bm.	T.R.s	B.R.s	CS	PN	PC	WPN	WPC	WF	N	G
3	1	45.0,0,0	2	2	2		2						1

(NUMBER OF RANGES: 1–10; BEAM TYPE: 25)

M = SPAN NUMBER. IF SPAN "M" (always give) IS IDENTICAL (symm.) TO SOME PREVIOUSLY DEFINED SPAN "S", ENTER SPAN NO. "S" UNDER S. NO FURTHER INPUT
L = SPAN LENGTH. REQUIRED FOR SPAN "M".

INDICATE BEAM TYPE WITH DIGIT ONE, 1. LOAD CARDS REQUIRED
BEAM TYPE: WF – WIDE FLANGE ROLLED BEAM – 400, 401
N – NON-STANDARD BEAM – 400, 411, 412, 413
G – GIRDER (Conc. or Steel) – 400, 421, 422, 423, 424, 425

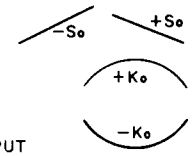

LOAD CARDS

		CODE	RANGE 1	RANGE 2	RANGE 3	RANGE 4	RANGE 5	RANGE 6	RANGE 7	RANGE 8	RANGE 9	RANGE 10	
BEAM OR WEB	RANGE	4,0,0	20.0	45.0									ft.
BEAM OR WEB	WF Bm.	4,0,1	W X	W X	W X	W X	W X	W X	W X	W X	W X	W X	in. & lbs.
BEAM OR WEB, NON-STD. BM/WEB	D	4,1,1											in.
BEAM OR WEB, NON-STD. BM/WEB	A	4,1,2											in.²
BEAM OR WEB, NON-STD. BM/WEB	I	4,1,3											in.⁴
BEAM OR WEB, GIRDER WEB CONC. OR STEEL	So	4,2,1	0 0	0 0									in./ft.
BEAM OR WEB, GIRDER WEB CONC. OR STEEL	Ko	4,2,2	0 0	.0192 0									in./ft.²
BEAM OR WEB, GIRDER WEB CONC. OR STEEL	Do	4,2,3	30. 0	30. 0									in.
BEAM OR WEB, GIRDER WEB CONC. OR STEEL	T	4,2,4	.625	.625									in.
BEAM OR WEB, GIRDER WEB CONC. OR STEEL	Xo	4,2,5	0. 0	20. 0									ft.
TOP PLATES	R	4,3,1	35.0 0	45.0 0									ft.
TOP PLATES	W	4,3,2	1.0 0	1.0 0									in.
TOP PLATES	T	4,3,3	1.0 0	1.25 0									in.
BOTTOM PLATES	R	4,4,1	35.0 0	45.0 0									ft.
BOTTOM PLATES	W	4,4,2	1.0 0	1.0 0									in.
BOTTOM PLATES	T	4,4,3	1.0 0	1.25 0									in.
COMPOSITE SLAB	R	4,5,1											ft.
COMPOSITE SLAB	W	4,5,2											in.
COMPOSITE SLAB	T	4,5,3											in.
COMPOSITE SLAB	e	4,5,4											in.
COMPOSITE SLAB	As	4,5,5											in.²
NON-COMP. P-LOADS	X	4,6,1	15.0 0	30. 0									ft.
NON-COMP. P-LOADS	X	0,0,0											ft.
NON-COMP. P-LOADS	P	4,6,2	1.0 0	1.0 0									kips
NON-COMP. P-LOADS	P	0,0,0											kips
COMP. P-LDS.	X	4,7,1											ft.
COMP. P-LDS.	P	4,7,2											kips
NON-COMP. Wp	X	4,8,1											ft.
NON-COMP. Wp	W	4,8,2											kips/ft.
COMP. Wp	X	4,9,1											ft.
COMP. Wp	W	4,9,2											kips/ft.

CONTINUOUS BEAM ANALYSIS

SPAN 2 OF 3.

SPAN DATA

SHEET 3 OF 4.

1-4-71

STATE HIGHWAY DEPARTMENT OF GEORGIA
BRIDGE DIVISION

SPAN CARD

REPEAT SPAN "S" M	S	L ft.	NUMBER OF RANGES Bm.	T.R.s	B.R.s	CS	PN	Pc	WPN	WPC	BEAM TYPE WF	N	G
3	2	60.00.0	1	3	3		2						1

M = SPAN NUMBER. IF SPAN "M" (always give) IS IDENTICAL (symm.) TO SOME PREVIOUSLY DEFINED SPAN "S", ENTER SPAN NO. "S" UNDER S. NO FURTHER INPUT
L = SPAN LENGTH. REQUIRED FOR SPAN "M".

INDICATE BEAM TYPE WITH DIGIT ONE, 1. LOAD CARDS REQUIRED
BEAM TYPE: WF - WIDE FLANGE ROLLED BEAM - 400, 401
N - NON-STANDARD BEAM - 400, 411, 412, 413
G - GIRDER (Conc. or Steel) - 400, 421, 422, 423, 424, 425

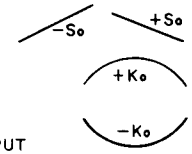

LOAD CARDS

		CODE	RANGE 1	RANGE 2	RANGE 3	RANGE 4	RANGE 5	RANGE 6	RANGE 7	RANGE 8	RANGE 9	RANGE 10	
BEAM OR WEB	RANGE	4,0,0	60.0										ft.
BEAM OR WEB	WF Bm	4,0,1	W X	W X	W X	W X	W X	W X	W X	W X	W X	W X	in. & lbs.
BEAM OR WEB, NON-STD. BM/WEB	D	4,1,1											in.
BEAM OR WEB, NON-STD. BM/WEB	A	4,1,2											in.^{2}
BEAM OR WEB, NON-STD. BM/WEB	I	4,1,3											in.^{4}
BEAM OR WEB, GIRDER WEB CONC. OR STEEL	So	4,2,1	0 0										in./ft.
BEAM OR WEB, GIRDER WEB CONC. OR STEEL	Ko	4,2,2	0.1333										in./ft.^{2}
BEAM OR WEB, GIRDER WEB CONC. OR STEEL	Do	4,2,3	30.0										in.
BEAM OR WEB, GIRDER WEB CONC. OR STEEL	T	4,2,4	625										in.
BEAM OR WEB, GIRDER WEB CONC. OR STEEL	Xo	4,2,5	30.0										ft.
TOP PLATES	R	4,3,1	14.0 0	46.0 0	60.0								ft.
TOP PLATES	W	4,3,2	1.0 0	1.0 0	1.0 0								in.
TOP PLATES	T	4,3,3	1.250	1.125	1.250								in.
BOTTOM PLATES	R	4,4,1	14.0 0	46.0 0	60.0								ft.
BOTTOM PLATES	W	4,4,2	1.0 0	1.0 0	1.0 0								in.
BOTTOM PLATES	T	4,4,3	1.250	1.125	1.250								in.
COMPOSITE SLAB	R	4,5,1											ft.
COMPOSITE SLAB	W	4,5,2											in.
COMPOSITE SLAB	T	4,5,3											in.
COMPOSITE SLAB	e	4,5,4											in.
COMPOSITE SLAB	As	4,5,5											in.^{2}
NON-COMP. P-LOADS	X	4,6,1	2.0 0	4.0 0									ft.
NON-COMP. P-LOADS	X	0,0,0											ft.
NON-COMP. P-LOADS	P	4,6,2	1.0 0	1.0 0									kips
NON-COMP. P-LOADS	P	0,0,0											kips
NON-COMP. P-LDS.	X	4,7,1											ft.
NON-COMP. P-LDS.	P	4,7,2											kips
NON-COMP. Wp	X	4,8,1											ft.
NON-COMP. Wp	W	4,8,2											kips/ft.
COMP. Wp	X	4,9,1											ft.
COMP. Wp	W	4,9,2											kips/ft.

CONTINUOUS BEAM ANALYSIS

SPAN 3 OF 3.

SPAN DATA

SHEET 4 OF 4.

1-4-71

STATE HIGHWAY DEPARTMENT OF GEORGIA
BRIDGE DIVISION

SPAN CARD

	M	S	L ft.	Bm.	T.R.s	B.R.s	CS	PN	PC	WPN	WPC	WF	N	G
3	3	7												

(REPEAT SPAN "S"; NUMBER OF RANGES; BEAM TYPE)

M = SPAN NUMBER. IF SPAN "M" (always give) IS IDENTICAL (symm.) TO SOME PREVIOUSLY DEFINED SPAN "S", ENTER SPAN NO. "S" UNDER S. NO FURTHER INPUT
L = SPAN LENGTH. REQUIRED FOR SPAN "M".

INDICATE BEAM TYPE WITH DIGIT ONE, I. LOAD CARDS REQUIRED
BEAM TYPE: WF - WIDE FLANGE ROLLED BEAM - 400, 401
N - NON-STANDARD BEAM - 400, 411, 412, 413
G - GIRDER (Conc. or Steel) - 400, 421, 422, 423, 424, 425

$-S_o$ $+S_o$ $+K_o$ $-K_o$

LOAD CARDS

		CODE	RANGE 1	RANGE 2	RANGE 3	RANGE 4	RANGE 5	RANGE 6	RANGE 7	RANGE 8	RANGE 9	RANGE 10	
BEAM OR WEB	RANGE	4,0,0											ft.
BEAM OR WEB	WF Bm.	4,0,1	W X	W X	W X	W X	W X	W X	W X	W X	W X	W X	in. & lbs.
BEAM OR WEB, NON-STD. BM/WEB	D	4,1,1											in.
BEAM OR WEB, NON-STD. BM/WEB	A	4,1,2											$in.^2$
BEAM OR WEB, NON-STD. BM/WEB	I	4,1,3											$in.^4$
BEAM OR WEB, GIRDER WEB CONC. OR STEEL	S_o	4,2,1											in./ft.
BEAM OR WEB, GIRDER WEB CONC. OR STEEL	K_o	4,2,2											$in./ft.^2$
BEAM OR WEB, GIRDER WEB CONC. OR STEEL	D_o	4,2,3											in.
BEAM OR WEB, GIRDER WEB CONC. OR STEEL	T	4,2,4											in.
BEAM OR WEB, GIRDER WEB CONC. OR STEEL	X_o	4,2,5											ft.
TOP PLATES	R	4,3,1											ft.
TOP PLATES	W	4,3,2											in.
TOP PLATES	T	4,3,3											in.
BOTTOM PLATES	R	4,4,1											ft.
BOTTOM PLATES	W	4,4,2											in.
BOTTOM PLATES	T	4,4,3											in.
COMPOSITE SLAB	R	4,5,1											ft.
COMPOSITE SLAB	W	4,5,2											in.
COMPOSITE SLAB	T	4,5,3											in.
COMPOSITE SLAB	e	4,5,4											in.
COMPOSITE SLAB	As	4,5,5											$in.^2$
NON-COMP. P-LOADS	X	4,6,1											ft.
NON-COMP. P-LOADS	X	0,0,0											ft.
NON-COMP. P-LOADS	P	4,6,2											kips
NON-COMP. P-LOADS	P	0,0,0											kips
COMP. P-LDS.	X	4,7,1											ft.
COMP. P-LDS.	P	4,7,2											kips
NON-COMP. Wp	X	4,8,1											ft.
NON-COMP. Wp	W	4,8,2											kips/ft.
COMP. Wp	X	4,9,1											ft.
COMP. Wp	W	4,9,2											kips/ft.

STATE HIGHWAY DEPARTMENT OF GEORGIA

BRIDGE DIVISION

01/19/71 THE ANALYSIS OF CONTINUOUS BEAMS FOR HIGHWAY BRIDGES PROB. NO. EX.2

EXAMPLE NO.2 45-60-45 CONTINUOUS WELDED PLATE GIRDER

BEAM CONSTANTS

BEAM IDENTITY	NO. OF SPANS	LIVE LOAD CLASS	BEAM TYPE	WDLNC	WDLC	WSW	WG	E	BM.SPAC.	SZR
EXAMPLE NO.2	3	H 20	NONC.ST'L.INT.	0.800	0.0	0.100	490.0	29.00	6.5000	0.0

OPTIONAL BEAM CONSTANTS

DFM	DFVE	DFD	N	3N	LIVE LOAD USED	STRESS CYCLES	FY	FU	FC	FS
1.1818	1.1818	0.8000	0	0	TR'K LANE	2000000	36.000	58.000	0.0	0.0

SPAN 1 INPUT DATA

M	S	L	* NUMBER OF RANGES								* BEAM SECTION TYPE
			BM	TPL	BPL	CS	PN	PC	PWN	PWC	
1	0	45.000	2	2	2	0	2	0	0	0	GIRD

BEAM SECTION AND LOADS

CODE	RANGE 1	RANGE 2	RANGE 3	RANGE 4	RANGE 5	RANGE 6	RANGE 7	RANGE 8	RANGE 9	RANGE 10
400	20.000	45.000								
421	0.0	0.0								
422	0.0	0.01920								
423	30.000	30.000								
424	0.625	0.625								
425	0.0	20.000								
431	35.000	45.000								
432	10.000	10.000								
433	1.000	1.250								
441	35.000	45.000								
442	10.000	10.000								
443	1.000	1.250								
461	15.000	30.000								
462	1.000	1.000								

EXAMPLE NO.2 SPAN 2 INPUT DATA

M	S	L	* NUMBER OF RANGES								* BEAM SECTION TYPE
			BM	TPL	BPL	CS	PN	PC	PWN	PWC	
2	0	60.000	1	3	3	0	2	0	0	0	GIRD

BEAM SECTION AND LOADS

CODE	RANGE 1	RANGE 2	RANGE 3	RANGE 4	RANGE 5	RANGE 6	RANGE 7	RANGE 8	RANGE 9	RANGE 10
400	60.000									
421	0.0									
422	0.01333									
423	3C.000									
424	0.625									
425	3C.000									
431	14.000	46.000	60.000							
432	10.000	10.000	10.000							
433	1.250	1.125	1.250							
441	14.000	46.000	60.000							
442	10.000	10.000	10.000							
443	1.250	1.125	1.250							
461	20.000	40.000								
462	1.000	1.000								

SPAN 3 INPUT DATA SAME AS SPAN 1 INPUT DATA

EXAMPLE NO.2

BEAM SECTION PROPERTIES AT SPAN TWENTIETH POINTS

S.PT	D.WEB	I	SM.BS	SM.TS	SM.TC	Q/I
1.00	30.00	6212.9	388.3	388.3	0.0	0.0
1.10	30.00	6212.9	388.3	388.3	0.0	0.0
1.20	30.00	6212.9	388.3	388.3	0.0	0.0
1.30	30.00	6212.9	388.3	388.3	0.0	0.0
1.40	30.00	6212.9	388.3	388.3	0.0	0.0
1.50	30.12	6267.1	390.2	390.2	0.0	0.0
1.60	30.94	6645.5	403.5	403.5	0.0	0.0
1.70	32.54	7420.4	429.7	429.7	0.0	0.0
1.80	34.92	10394.6	555.6	555.6	0.0	0.0
1.90	38.07	12539.C	618.2	618.2	0.0	0.0
2.00	42.00	15553.C	699.0	699.0	0.0	0.0
2.10	37.68	12261.6	610.3	61C.3	0.0	0.0
2.20	34.32	10016.3	544.1	544.1	0.0	0.0
2.30	31.92	7838.6	458.8	458.8	0.0	0.0
2.40	30.48	7095.9	433.6	433.6	0.0	0.0
2.50	30.00	6857.9	425.3	425.3	C.0	0.0
2.60	30.48	7095.9	433.6	433.6	0.0	0.0
2.70	31.92	7838.6	458.8	458.8	0.0	0.0
2.80	34.32	10016.3	544.1	544.1	0.0	0.0
2.90	37.68	12261.6	610.3	610.3	0.0	0.0
3.00	42.00	15552.8	699.0	699.0	0.0	0.0
3.10	38.07	12539.C	618.2	618.2	0.0	0.0
3.20	34.92	10394.6	555.6	555.6	0.0	0.0
3.30	32.54	7420.4	429.7	429.7	0.0	0.0
3.40	30.94	6645.5	403.5	403.5	0.0	0.0
3.50	30.12	6267.1	390.2	39C.2	0.0	0.0
3.60	30.00	6212.9	388.3	388.3	0.0	0.0
3.70	30.00	6212.9	388.3	388.3	0.0	0.0
3.80	30.00	6212.9	388.3	388.3	0.0	0.0
3.90	30.00	6212.9	388.3	388.3	0.0	0.0
4.00	30.00	6212.9	388.3	388.3	0.0	0.0

S.PT	D.WEB	I	SM.BS	SM.TS	SM.TC	Q/I
1.05	30.00	6212.9	388.3	388.3	0.0	0.0
1.15	30.00	6212.9	388.3	388.3	0.0	0.0
1.25	30.00	6212.9	388.3	388.3	0.0	0.0
1.35	30.00	6212.9	388.3	388.3	0.0	0.0
1.45	30.00	6213.4	388.3	388.3	0.0	0.0
1.55	30.43	6409.9	395.3	395.3	0.0	0.0
1.65	31.64	6979.6	414.9	414.9	0.0	0.0
1.75	33.63	7978.8	447.9	447.9	0.0	0.0
1.85	36.39	11371.1	584.7	584.7	0.0	0.0
1.95	39.94	13923.3	656.2	656.2	0.0	0.0
2.05	39.72	13757.7	651.7	651.7	0.0	0.0
2.15	35.88	11025.4	574.5	574.5	0.0	0.0
2.25	33.00	8424.4	478.0	478.0	0.0	0.0
2.35	31.08	7400.0	444.0	444.0	0.0	0.0
2.45	30.12	6917.0	427.4	427.4	0.0	0.0
2.55	30.12	6917.0	427.4	427.4	0.0	0.0
2.65	31.08	7400.0	444.0	444.0	0.0	0.0
2.75	33.00	8424.4	478.0	478.0	0.0	0.0
2.85	35.88	11025.4	574.5	574.5	0.0	0.0
2.95	39.72	13757.7	651.7	651.7	0.0	0.0
3.05	39.94	13923.3	656.2	656.2	0.0	0.0
3.15	36.39	11371.1	584.7	584.7	0.0	0.0
3.25	33.63	7978.8	447.9	447.9	0.0	0.0
3.35	31.64	6979.6	414.9	414.9	0.0	0.0
3.45	30.43	6409.9	395.3	395.3	0.0	0.0
3.55	30.00	6213.4	388.3	388.3	0.0	0.0
3.65	30.00	6212.9	388.3	388.3	0.0	0.0
3.75	30.00	6212.9	388.3	388.3	0.0	0.0
3.85	30.00	6212.9	388.3	388.3	0.0	0.0
3.95	30.00	6212.9	388.3	388.3	0.0	0.0

SPAN PROPERTIES

SPAN	DL	KL	KLM	CLR	CLRM	CRLM	CRL	KRM	KR	DR
1	1.000000	0.006247	0.005137	0.652996	0.323344	0.0	0.458956	0.006224	0.008888	0.504829
2	0.495171	0.007511	0.006105	0.585088	0.326198	0.326198	0.585090	0.006105	0.007511	0.495169
3	0.504831	0.008888	0.C06224	0.458956	0.0	0.323344	0.652997	0.005137	0.006247	1.000000

EXAMPLE NO.2 MOMENTS(KIP-FEET) AT SPAN TENTH AND MISC. POINTS

*	NCN-COMPOSITE CEAD LOADS					*	COMPOSITE DEAD LOADS				*	LIVE LOADS					*	TOTALS	
S.P	BEAM	PN	WDLNC	WPN	TOT.NC	*	PC	WDLC	WPC	TOT.C	*	SWK.+	SWK.-	LL+I +		LL+I -	*	MAX.+	MAX.-
1.1	7.5	2.9	46.9	-0.0	57.3		0.0	0.0	0.0	0.0		8.1	-2.2	108.8	T	-19.0	L	174.2	36.1
1.2	12.4	5.8	77.6	-0.0	95.8		0.0	0.0	0.0	0.0		14.1	-4.4	183.0	T	-38.0	L	292.9	53.4
1.3	14.6	8.7	92.1	-0.0	115.4		0.0	0.0	0.0	0.0		18.2	-6.6	224.9	T	-57.0	L	358.4	51.7
1.4	14.1	8.5	90.4	-0.0	113.1		0.0	0.0	0.0	0.0		20.2	-8.9	237.9	T	-76.0	L	371.1	28.2
1.5	11.0	6.9	72.5	-0.0	90.4		0.0	0.0	0.0	0.0		20.1	-11.1	228.8	T	-95.0	L	339.4	-15.6
1.6	5.1	5.3	38.4	-0.0	48.9		0.0	0.0	0.0	0.0		18.1	-13.3	204.8	T	-114.0	L	271.8	-78.4
1.7	-3.4	2.2	-11.9	-0.0	-13.1		0.0	0.0	0.0	0.0		14.0	-15.5	162.2	T	-133.0	L	163.2	-161.5
1.8	-14.7	-3.9	-78.4	-0.0	-97.0		0.0	0.0	0.0	0.0		8.5	-18.3	106.5	T	-161.1	L	18.1	-276.4
1.9	-29.1	-10.0	-161.1	-0.0	-200.2		0.0	0.0	0.0	0.0		5.6	-25.7	58.0	L	-233.8	L	-136.7	-459.8
2.0	-46.9	-16.1	-260.0	0.0	-323.0		0.0	0.0	0.0	0.0		5.0	-37.5	49.2	T	-337.1	L	-268.8	-697.7
2.1	-22.5	-10.1	-130.4	-0.0	-163.0		0.0	0.0	0.0	0.0		4.8	-21.1	62.1	L	-202.1	L	-96.0	-386.2
2.2	-4.0	-4.1	-29.6	-0.0	-37.7		0.0	0.0	0.0	0.0		8.3	-12.0	137.0	T	-117.6	L	107.7	-167.4
2.3	8.9	1.9	42.4	-0.0	53.2		0.0	0.0	0.0	0.0		15.7	-10.4	197.3	T	-99.2	L	266.1	-56.4
2.4	16.5	3.9	85.6	-0.0	106.0		0.0	0.0	0.0	0.0		21.1	-10.4	234.8	T	-99.2	L	361.8	-3.5
2.5	19.0	3.9	100.0	-0.0	122.9		0.0	0.0	0.0	0.0		22.9	-10.4	245.7	T	-99.2	L	391.5	13.4
2.6	16.5	3.9	85.6	-0.0	106.0		0.0	0.0	0.0	0.0		21.1	-10.4	234.8	T	-99.2	L	361.8	-3.5
2.7	8.9	1.9	42.4	-0.0	53.2		0.0	0.0	0.0	0.0		15.7	-10.4	197.3	T	-99.2	L	266.1	-56.4
2.8	-4.0	-4.1	-29.6	-0.0	-37.7		0.0	0.0	0.0	0.0		8.3	-12.0	137.0	T	-117.6	L	107.7	-167.4
2.9	-22.5	-10.1	-130.4	-0.0	-163.0		0.0	0.0	0.0	0.0		4.8	-21.1	62.1	L	-202.1	L	-96.0	-386.2
3.0	-46.9	-16.1	-260.0	0.0	-323.0		0.0	0.0	0.0	0.0		5.0	-37.5	49.2	T	-337.1	L	-268.8	-697.7
3.1	-29.1	-10.0	-161.1	-0.0	-200.2		0.0	0.0	0.0	0.0		5.6	-25.7	58.0	L	-233.8	L	-136.7	-459.8
3.2	-14.7	-3.9	-78.4	-0.0	-97.0		0.0	0.0	0.0	0.0		8.5	-18.3	106.5	T	-161.1	L	18.1	-276.5
3.3	-3.4	2.2	-11.9	-0.0	-13.1		0.0	0.0	0.0	0.0		14.0	-15.5	162.2	T	-133.0	L	163.2	-161.5
3.4	5.1	5.3	38.4	-0.0	48.9		0.0	0.0	0.0	0.0		18.1	-13.3	204.8	T	-114.0	L	271.8	-78.4
3.5	11.0	6.9	72.5	-0.0	90.4		0.0	0.0	0.0	0.0		20.1	-11.1	228.8	T	-95.0	L	339.4	-15.6
3.6	14.1	8.5	90.4	-0.0	113.1		0.0	0.0	0.0	0.0		20.2	-8.9	237.9	T	-76.0	L	371.1	28.2
3.7	14.6	8.7	92.1	-0.0	115.4		0.0	0.0	0.0	0.0		18.2	-6.6	224.9	T	-57.0	L	358.4	51.7
3.8	12.4	5.8	77.6	-0.0	95.8		0.0	0.0	0.0	0.0		14.1	-4.4	183.0	T	-38.0	L	292.9	53.4
3.9	7.5	2.9	46.9	-0.0	57.3		0.0	0.0	0.0	0.0		8.1	-2.2	108.8	T	-19.0	L	174.2	36.1
1.444					105.4					0.0		20.4	-9.8	236.0		-84.4		361.8	11.1
1.778					-76.3					0.0		10.0	-17.8	120.9		-155.5		54.6	-249.6
2.233					-3.2					0.0		11.0	-11.3	159.6		-109.2		167.4	-123.6
2.767					-3.2					0.0		11.0	-11.3	159.6		-109.2		167.4	-123.6
3.222					-76.3					0.0		10.0	-17.8	120.9		-155.5		54.6	-249.6
3.556					105.4					0.0		20.4	-9.8	236.0		-84.4		361.8	11.1

EXAMPLE NO.2 STRESSES AT SPAN TENTH AND MISCELLANEOUS POINTS

	* ACTUAL STRESSES(PSI)									* ALLOWABLE FATIGUE STRESSES(PSI)								
	TOTAL DEAD LOAD			D.L. + L.L. POS.			D.L. + L.L. NEG.			* BASE METAL		BASE M. ADJ.		BASE M. ADJ.		BASE M. ADJ.		FLANGE
	TOP	TOP	BOT.	TOP	TOP	BOT.	TOP	TOP	BOT.	TOP	BOT.	FILLET WELD		CON.FIL.WELD		BUTT WELD		W STUD
S.PT.	CONC.	STEEL	STEEL	CONC.	STEEL	STEEL	CONC.	STEEL	STEEL	STEEL	STEEL	TOP S	BOT.S	TOP S	BOT.S	TOP S	BOT.S	TOP S
1.100	0	1771	-1771	0	5384	-5384	0	1116	-1116	20000	20000	10091	10091	20000	20000	20000	-17419	20000
1.200	0	2959	-2959	0	9052	-9052	0	1649	-1649	20000	20000	9781	9781	20000	20000	20000	-17085	20000
1.300	0	3565	-3565	0	11077	-11077	0	1598	-1598	20000	20000	9349	9349	20000	20000	20000	-16605	20000
1.400	0	3494	-3494	0	11468	-11468	0	872	-872	20000	20000	8658	8658	19482	19482	20000	-15805	20000
1.500	0	2780	-2780	0	10435	-10435	0	-480	480	20000	20000	7647	7647	17207	17207	18934	-14551	20000
1.600	0	1454	-1454	0	8082	-8082	0	-2330	2330	18628	18628	6209	6209	13971	13971	14788	-12571	20000
1.700	0	-364	364	0	4557	-4557	0	-4510	4510	12061	12061	4020	4020	9046	9046	9051	-9019	20000
1.800	0	-2094	2094	0	390	-390	0	-5970	5970	20000	20000	7509	7509	16896	16896	-14370	18521	20000
1.900	0	-3886	3886	0	-2652	2652	0	-8925	8925	20000	20000	11383	11383	20000	20000	-18730	20000	20000
2.000	0	-5545	5545	0	-4615	4615	0	-11976	11976	20000	20000	13015	13015	20000	20000	-20000	20000	20000
2.100	0	-3204	3204	0	-1888	1888	0	-7592	7592	20000	20000	10647	10647	20000	20000	-17998	20000	20000
2.200	0	-831	831	0	2374	-2374	0	-3691	3691	14603	14603	4867	4867	10952	10952	-10481	11195	20000
2.300	0	1390	-1390	0	6960	-6960	0	-1473	1473	19805	19805	6601	6601	14854	14854	15837	-13136	20000
2.400	0	2933	-2933	0	10014	-10014	0	-97	97	20000	20000	7922	7922	17826	17826	19764	-14902	20000
2.500	0	3468	-3468	0	11047	-11047	0	378	-378	20000	20000	8283	8283	18637	18637	20000	-15352	20000
2.600	0	2933	-2933	0	10014	-10014	0	-97	97	20000	20000	7922	7922	17826	17826	19764	-14902	20000
2.700	0	1390	-1390	0	6960	-6960	0	-1473	1473	19805	19805	6601	6601	14854	14854	15887	-13136	20000
2.800	0	-831	831	0	2374	-2374	0	-3691	3691	14603	14603	4867	4867	10952	10952	-10481	11195	20000
2.900	0	-3204	3204	0	-1888	1888	0	-7592	7592	20000	20000	10647	10647	20000	20000	-17998	20000	20000
3.000	0	-5545	5545	0	-4615	4615	0	-11976	11976	20000	20000	13015	13015	20000	20000	-20000	20000	20000
3.100	0	-3886	3886	0	-2653	2653	0	-8925	8925	20000	20000	11383	11383	20000	20000	-18730	20000	20000
3.200	0	-2094	2094	0	390	-390	0	-5970	5970	20000	20000	7509	7509	16896	16896	-14371	18521	20000
3.300	0	-364	364	0	4557	-4557	0	-4510	4510	12061	12061	4020	4020	9046	9046	9050	-9019	20000
3.400	0	1454	-1454	0	8082	-8082	0	-2330	2330	18628	18628	6209	6209	13971	13971	14788	-12571	20000
3.500	0	2780	-2780	0	10435	-10435	0	-480	480	20000	20000	7647	7647	17207	17207	18934	-14551	20000
3.600	0	3494	-3494	0	11468	-11468	0	872	-872	20000	20000	8658	8658	19482	19482	20000	-15805	20000
3.700	0	3565	-3565	0	11077	-11077	0	1598	-1598	20000	20000	9349	9349	20000	20000	20000	-16605	20000
3.800	0	2959	-2959	0	9052	-9052	0	1649	-1649	20000	20000	9781	9781	20000	20000	20000	-17085	20000
3.900	0	1771	-1771	0	5384	-5384	0	1116	-1116	20000	20000	10091	10091	20000	20000	20000	-17419	20000

EXAMPLE NO.2

STRESSES AT SPAN TENTH AND MISCELLANEOUS POINTS

*	ACTUAL STRESSES(PSI)									*	ALLOWABLE FATIGUE STRESSES(PSI)								
	TOTAL DEAD LOAD			D.L. + L.L. POS.			D.L. + L.L. NEG.			* BASE METAL		BASE M. ADJ.		BASE M. ADJ.		BASE M. ADJ.		FLANGE
	TOP	TOP	BOT.	TOP	TOP	BOT.	TOP	TOP	BOT.	TOP	BOT.	FILLET WELD		CON.FIL.WELD		BUTT WELD		W STUD
S.PT.	CONC.	STEEL	STEEL	CONC.	STEEL	STEEL	CONC.	STEEL	STEEL	STEEL	STEEL	TOP S	BOT.S	TOP S	BOT.S	TOP S	BOT.S	TOP S
1.444	0	3257	-3257	C	11181	-11181	0	344	-344	20000	20000	8254	8254	18572	18572	20000	-15316	20000
1.444	0	3257	-3257	0	11181	-11181	0	344	-344	20000	20000	8254	8254	18572	18572	20000	-15316	20000
1.778	0	-1993	1993	0	1424	-1424	0	-6519	6519	19695	19695	6565	6565	14771	14771	-13084	15784	20000
1.778	0	-1683	1683	C	1203	-1203	0	-5505	5505	19695	19695	6565	6565	14771	14771	-13084	15784	20000
2.233	C	-72	72	0	3813	-3813	0	-2816	2816	13804	13804	4601	4601	10353	10353	10511	-10034	20000
2.233	0	-78	78	0	4137	-4137	0	-3056	3056	13804	13804	4601	4601	10353	10353	10511	-10034	20000
2.767	0	-78	78	0	4137	-4137	0	-3056	3056	13804	13804	4601	4601	10353	10353	10511	-10034	20000
2.767	0	-72	72	C	3813	-3813	0	-2816	2816	13804	13804	4601	4601	10353	10353	10511	-10034	20000
3.222	0	-1683	1683	0	1203	-12C3	0	-5505	5505	19695	19695	6565	6565	14771	14771	-13084	15784	20000
3.222	0	-1993	1993	0	1424	-1424	0	-6519	6519	19695	19695	6565	6565	14771	14771	-13084	15784	20000
3.556	0	3257	-3257	C	11181	-11181	0	344	-344	20000	20000	8254	8254	18571	18571	20000	-15316	20000
3.556	0	3257	-3257	0	11181	-11181	0	344	-344	20000	20000	8254	8254	18571	18571	20000	-15316	20000

EXAMPLE NO.2 SHEARS(KIPS) AND SHEAR CONNECTOR SPACINGS(INCHES) AT SPAN TENTH POINTS AND REACTIONS(KIPS)

	DEAD LOADS					*	LIVE LOADS				* MAXIMUM	LL SHEAR	SHEAR
S.PT	BEAM	PN	WN	WPN	TOT.C	TOT.DL *	SWK.+	SWK.-	LL+I +	LL+I - *	V OR R	RANGE	CON.SP.
1.00	1.971	0.642	12.223	0.0	0.0	14.836	2.020	-0.492	29.767 L	-5.110 L	46.623		
1.10	1.378	0.642	8.623	-0.0	0.0	10.642	1.600	-0.522	25.201 L	-5.256 L	37.442		
1.20	0.784	0.642	5.023	-0.0	0.0	6.449	1.238	-0.610	20.831 L	-8.230 L	28.518		
1.30	0.191	0.642	1.423	-0.0	0.0	2.256	0.935	-0.757	16.831 L	-11.457 L	20.021		
1.40	-0.402	-0.358	-2.177	-0.0	0.0	-2.938	0.686	-0.958	13.276 T	-14.826 L	-18.722		
1.50	-0.996	-0.358	-5.777	-0.0	0.0	-7.131	0.489	-1.211	10.102 T	-18.278 L	-26.621		
1.60	-1.594	-0.358	-9.377	-0.0	0.0	-11.329	0.340	-1.512	7.322 L	-21.753 L	-34.594		
1.70	-2.203	-1.358	-12.977	-0.0	0.0	-16.539	0.233	-1.855	5.037 L	-25.197 L	-43.591		
1.80	-2.841	-1.358	-16.577	-0.0	0.0	-20.777	0.162	-2.234	3.183 L	-28.573 L	-51.584		
1.90	-3.573	-1.358	-20.177	-0.0	0.0	-25.108	0.123	-2.646	1.704 L	-31.882 L	-59.636		
2.00	-4.338	-1.358	-23.777	-0.0	0.0	-29.474	0.111	-3.084	0.548 L	-34.974 L	-67.531		
R1-2	8.926	2.358	47.777	0.0	0.0	59.061	6.423		50.826 L		116.311		
2.00	4.588	1.000	24.000	0.0	0.0	29.588	3.340	-0.340	35.560 L	-4.024 L	68.488		
2.10	3.570	1.000	19.200	-0.0	0.0	23.770	2.761	-0.361	31.572 L	-4.128 L	58.103		
2.20	2.601	1.000	14.400	-0.0	0.0	18.001	2.231	-0.431	27.473 L	-5.352 L	47.705		
2.30	1.701	1.000	9.600	-0.0	0.0	12.301	1.758	-0.558	23.321 L	-8.029 L	37.380		
2.40	0.844	-0.000	4.800	-0.0	0.0	5.644	1.351	-0.751	19.043 L	-11.261 L	26.038		
2.50	-0.000	-0.000	-0.000	-0.0	0.0	-0.000	1.014	-1.014	14.973 L	-14.973 L	-15.987		
2.60	-0.844	-0.000	-4.800	-0.0	0.0	-5.644	0.751	-1.351	11.261 L	-19.043 L	-26.038		
2.70	-1.701	-1.000	-9.600	-0.0	0.0	-12.301	0.558	-1.758	8.028 L	-23.321 L	-37.380		
2.80	-2.601	-1.000	-14.400	-0.0	0.0	-18.001	0.431	-2.231	5.352 L	-27.473 L	-47.705		
2.90	-3.570	-1.000	-19.200	-0.0	0.0	-23.770	0.361	-2.761	4.128 L	-31.572 L	-58.103		
3.00	-4.588	-1.000	-24.000	-0.0	0.0	-29.588	0.340	-3.340	4.024 L	-35.560 L	-68.488		
R2-3	8.926	2.358	47.777	0.0	0.0	59.061	6.423		50.826 L		116.311		
3.00	4.338	1.358	23.777	0.0	0.0	29.474	3.084	-0.111	34.974 L	-0.548 L	67.531		
3.10	3.573	1.358	20.177	-0.0	0.0	25.108	2.646	-0.123	31.882 L	-1.704 L	59.636		
3.20	2.841	1.358	16.577	-0.0	0.0	20.777	2.234	-0.162	28.573 L	-3.183 L	51.584		
3.30	2.203	1.358	12.977	-0.0	0.0	16.539	1.855	-0.233	25.197 L	-5.037 L	43.591		
3.40	1.594	0.358	9.377	-0.0	0.0	11.329	1.512	-0.340	21.753 L	-7.322 L	34.594		
3.50	0.996	0.358	5.777	-0.0	0.0	7.131	1.211	-0.489	18.278 L	-10.102 T	26.621		
3.60	0.402	0.358	2.177	-0.0	0.0	2.938	0.958	-0.686	14.826 L	-13.276 T	18.722		
3.70	-0.191	-0.642	-1.423	-0.0	0.0	-2.256	0.757	-0.935	11.457 L	-16.831 L	-20.021		
3.80	-0.784	-0.642	-5.023	-0.0	0.0	-6.449	0.610	-1.238	8.230 L	-20.831 L	-28.518		
3.90	-1.378	-0.642	-8.623	-0.0	0.0	-10.642	0.522	-1.600	5.256 L	-25.201 L	-37.442		
4.00	-1.971	-0.642	-12.223	-0.0	0.0	-14.836	0.492	-2.020	5.110 L	-29.767 L	-46.623		

SPAN 1 V LANE = 9.885 V 14 FT. = 14.663 SPAN 3 V LANE = 9.885 V 14 FT. = 14.663

EXAMPLE NO.2

DEAD LOAD DEFLECTIONS(INCHES) AT SPAN TWENTIETH POINTS

S.PT	BEAM	PN	WN	WPN	TOT.NC	TOT.C	TOT.DL	S.PT	BEAM	PN	WN	WPN	TOT.NC	TOT.C	TOT.DL
1.05	0.004	0.002	0.025	0.0	0.031	0.0	0.031	1.10	0.007	0.004	0.048	0.0	0.060	0.0	0.060
1.15	0.011	0.007	0.069	0.0	0.086	0.0	0.086	1.20	0.013	0.008	0.087	0.0	0.109	0.0	0.109
1.25	0.015	0.010	0.102	0.0	0.127	0.0	0.127	1.30	0.017	0.011	0.112	0.0	0.140	0.0	0.140
1.35	0.018	0.012	0.117	0.0	0.147	0.0	0.147	1.40	0.018	0.012	0.118	0.0	0.148	0.0	0.148
1.45	0.017	0.012	0.115	0.0	0.144	0.0	0.144	1.50	0.016	0.012	0.108	0.0	0.136	0.0	0.136
1.55	0.014	0.011	0.097	0.0	0.122	0.0	0.122	1.60	0.012	0.010	0.084	0.0	0.106	0.0	0.106
1.65	0.009	0.009	0.069	0.0	0.087	0.0	0.087	1.70	0.007	0.007	0.053	0.0	0.067	0.0	0.067
1.75	0.004	0.006	0.037	0.0	0.048	0.0	0.048	1.80	0.002	0.004	0.024	0.0	0.030	0.0	0.030
1.85	0.001	0.003	0.012	0.0	0.016	0.0	0.016	1.90	-0.000	0.002	0.004	0.0	0.006	0.0	0.006
1.95	-0.001	0.001	-0.000	0.0	0.000	0.0	0.000								
2.05	0.002	-0.000	0.008	0.0	0.009	0.0	0.009	2.10	0.005	-0.000	0.023	0.0	0.028	0.0	0.028
2.15	0.010	0.000	0.044	0.0	0.054	0.0	0.054	2.20	0.015	0.001	0.068	0.0	0.084	0.0	0.084
2.25	0.020	0.002	0.094	0.0	0.116	0.0	0.116	2.30	0.025	0.003	0.120	0.0	0.148	0.0	0.148
2.35	0.029	0.004	0.142	0.0	0.176	0.0	0.176	2.40	0.033	0.005	0.160	0.0	0.198	0.0	0.198
2.45	0.035	0.005	0.171	0.0	0.211	0.0	0.211	2.50	0.035	0.005	0.175	0.0	0.216	0.0	0.216
2.55	0.035	0.005	0.171	0.0	0.211	0.0	0.211	2.60	0.033	0.005	0.160	0.0	0.197	0.0	0.197
2.65	0.029	0.004	0.142	0.0	0.176	0.0	0.176	2.70	0.025	0.003	0.120	0.0	0.148	0.0	0.148
2.75	0.020	0.002	0.094	0.0	0.116	0.0	0.116	2.80	0.015	0.001	0.068	0.0	0.084	0.0	0.084
2.85	0.010	0.000	0.044	0.0	0.054	0.0	0.054	2.90	0.005	-0.000	0.023	0.0	0.028	0.0	0.028
2.95	0.002	-0.000	0.008	0.0	0.009	0.0	0.009								
3.05	-0.001	0.001	-0.000	0.0	0.000	0.0	0.000	3.10	-0.000	0.002	0.004	0.0	0.006	0.0	0.006
3.15	0.001	0.003	0.012	0.0	0.016	0.0	0.016	3.20	0.002	0.004	0.024	0.0	0.030	0.0	0.030
3.25	0.004	0.006	0.037	0.0	0.048	0.0	0.048	3.30	0.007	0.007	0.053	0.0	0.067	0.0	0.067
3.35	0.009	0.009	0.069	0.0	0.087	0.0	0.087	3.40	0.012	0.010	0.084	0.0	0.106	0.0	0.106
3.45	0.014	0.011	0.097	0.0	0.122	0.0	0.122	3.50	0.016	0.012	0.108	0.0	0.136	0.0	0.136
3.55	0.017	0.012	0.115	0.0	0.144	0.0	0.144	3.60	0.018	0.012	0.118	0.0	0.148	0.0	0.148
3.65	0.018	0.012	0.117	0.0	0.147	0.0	0.147	3.70	0.017	0.011	0.112	0.0	0.140	0.0	0.140
3.75	0.015	0.010	0.102	0.0	0.127	0.0	0.127	3.80	0.013	0.008	0.087	0.0	0.109	0.0	0.109
3.85	0.011	0.007	0.069	0.0	0.086	0.0	0.086	3.90	0.007	0.004	0.048	0.0	0.060	0.0	0.060
3.95	0.004	0.002	0.025	0.0	0.031	0.0	0.031								

LIVE LOAD DEFLECTIONS(INCHES)

SPAN	AT	LANE	TRUCK	MIL.	SIDEWALK	L/800
1	0.450 L	0.233	0.224	0.294	0.037	0.675
2	0.500 L	0.338	0.315	0.404	0.057	0.900
3	0.550 L	0.233	0.224	0.294	0.037	0.675

EXAMPLE NO. 2: COMMENTS

The beam in this example is a variable depth plate girder of A36 steel and subjected to 2,000,000 stress cycles. Live load consists of H20 truck and lane with military live load eliminated. Since the beam is non-composite the input data for WDLc, $\sum Zr$ and n are not used in this problem. The distribution factors for moment and end shear will be computed by the program. However, the distribution factor for live load deflections is computed as 0.8 and given in the input. Noting that this is a two lane bridge, the distribution factor for live load deflections assigns eight-tenths of a wheel to each beam.

Note that in Span 2 the variable depth web can be defined with only one range. This is true because only one equation for the web depth is required to compute the depth at any point in Span 2. Span 3 is identical to Span 1 and is so defined.

A quick inspection of the output indicates that the beam is understressed with regard to basic and fatigue allowable stresses. Also the live load deflection will present no problem. Therefore, the beam in this problem would not be an economical design.

EXAMPLE NO. 3: 82-104-82 CONTINUOUS UNIT (WF WITH C. PL'S.)

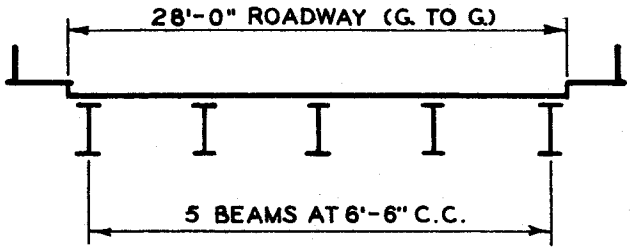

BRIDGE CROSS SECTION

LIVE LOAD = HS20 and Military
500,000 stress cycles
A36 steel

INVESTIGATE FIRST INTERIOR BEAM

GIVEN: $W_{DLnc} = 855$ LB/FT.

$D^F{}_D = 2(2)/5 = 0.80$

$D^F{}_{Ve} = D^F{}_M$

W_{SW} = NONE

$W_G = 490.0$ LB/FT.^{3}

$E = 29.00 \times 10^6$ LB/IN.^{2}

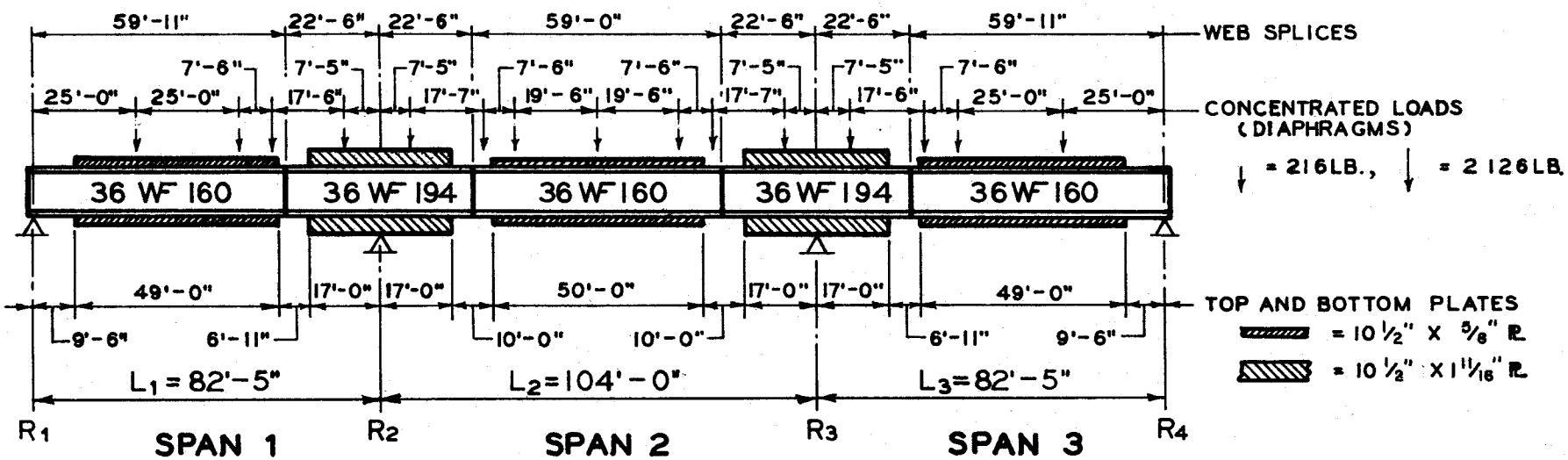

CONTINUOUS BEAM ANALYSIS

SHEET 1 OF 4

DESIGN DATA

IDENTIFICATION

ENTER "CONT" IF ADDITIONAL CARD OF REMARKS IS USED.

	PGM.	PROB. NO.	REMARKS, PROJECT NUMBER, DATE, COUNTY, NAME, ETC.	77	80
*	B.O.I	EX.-3	EXAMPLE NO. 3 82-104-82 CONTINUOUS UNIT ROLLED BEAM WITH COVER PLATES		
*					

"I" = NON-COMP. BM.
"O" = COMP. BM.

BEAM CONSTANTS

	BEAM IDENTITY	Ns	℄ CLASS	TYPE	WDLnc	WDLc	Wsw	WG	E	BM. SPAC.	Σ Zr
1	EXAMPLE NO. 3	3	HS20	1	.0855			490	29.00	6.5000	

"I" = CONC. BM.
"O" = STEEL BM.

"I" = EXT. BM.
"O" = INT. BM.

OPTIONAL BEAM CONSTANTS

	D^F_M	D^F_{Ve}	D^F_D	n = Es/Ec 1n	3n	℄ SKIP T	L	M	NO. ℄ CYCLES	Fy	Fu	Fc	Fs
2			.80000										

Fy & Fu NOT REQUIRED WITH CONCRETE BEAM.

Fc & Fs NOT REQUIRED WITH STEEL BEAM.

BEAM CONSTANTS

BEAM IDENTITY – BEAM NAME, i.e., Bm. A LT.

Ns – NUMBER OF SPANS ($2 \leq Ns \leq 8$).

℄ CLASS – A.A.S.H.O. ℄ DESIGNATION, HS 20, H15, etc.

W_{DLnc} – UNIFORM NON-COMPOSITE DEAD LOAD, kips/ft.

W_{DLc} – UNIFORM COMPOSITE DEAD LOAD, kips/ft.

Wsw – UNIFORM SIDEWALK LIVE LOAD, kips/ft.

W_G – UNIT WEIGHT OF BEAM MATERIAL, lbs./ft.^{3}

E – MODULUS OF ELASTICITY OF BEAM MATERIAL, million lbs./in.^{2}

BM. SPAC. – BEAM SPACING, ft.

Σ Zr – SHEAR CONNECTOR CAPACITY, ONE TRANSVERSE ROW, kips.

DO NOT INCLUDE BEAM WEIGHT IN W_{DLnc}.

OPTIONAL BEAM CONSTANTS

D^F_M – DISTRIBUTION FACTOR FOR MOMENT, SHEAR.

D^F_{Ve} – DISTRIBUTION FACTOR FOR END SHEAR.

D^F_D – DISTRIBUTION FACTOR FOR ℄ DEFLECTIONS.

n – MODULAR RATIO SHORT (1n) AND LONG (3n) TERM VALUES. (10 and 30 assumed if not given)

℄ SKIP – ENTER DIGIT "1" TO SKIP TRUCK (T), LANE (L), OR MILITARY (M) LIVE LOAD.

	VALUES ASSUMED IF NOT GIVEN
NO. ℄ CYCLES – NUMBER CYCLES MAXIMUM STRESS.	500,000
Fy – MIN. YIELD STRENGTH BEAM MATERIAL, kips/in.^{2}	36.0
Fu – MIN. TENSILE STRENGTH BEAM MATERIAL, kips/in.^{2}	58.0
Fc – ALLOWABLE CONCRETE FLEXURE STRESS, kips/in.^{2}	1.200
Fs – ALLOWABLE REINFORCING STEEL STRESS, kips/in.^{2}	20.0

STATE HIGHWAY DEPARTMENT OF GEORGIA
BRIDGE DIVISION

1-4-71

CONTINUOUS BEAM ANALYSIS

SPAN 1 OF 3.

SPAN DATA

SHEET 2 OF 4.

1-4-71

STATE HIGHWAY DEPARTMENT OF GEORGIA
BRIDGE DIVISION

SPAN CARD

	M	S	L ft.	Bm.	T.R.s	B.R.s	CS	PN	PC	WPN	WPC	WF	N	G
3	1		82.417	2	4	4		4				1		

(REPEAT SPAN "S")

NUMBER OF RANGES

BEAM TYPE

M = SPAN NUMBER. IF SPAN "M" (always give) IS IDENTICAL (symm.) TO SOME PREVIOUSLY DEFINED SPAN "S", ENTER SPAN NO. "S" UNDER S. NO FURTHER INPUT
L = SPAN LENGTH. REQUIRED FOR SPAN "M".

INDICATE BEAM TYPE WITH DIGIT ONE, 1.
BEAM TYPE: WF - WIDE FLANGE ROLLED BEAM — LOAD CARDS REQUIRED: 400, 401
N - NON-STANDARD BEAM — 400, 411, 412, 413
G - GIRDER (Conc. or Steel) — 400, 421, 422, 423, 424, 425

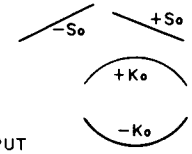

LOAD CARDS

		CODE	RANGE 1	RANGE 2	RANGE 3	RANGE 4	RANGE 5	RANGE 6	RANGE 7	RANGE 8	RANGE 9	RANGE 10	
BEAM OR WEB	RANGE	4,0,0	59.917	82.417									ft.
BEAM OR WEB	WF Bm.	4,0,1	W 36 X 160	W 36 X 194	W X	W X	W X	W X	W X	W X	W X	W X	in. & lbs.
BEAM OR WEB — NON-STD. BM/WEB	D	4,1,1											in.
BEAM OR WEB — NON-STD. BM/WEB	A	4,1,2											in.²
BEAM OR WEB — NON-STD. BM/WEB	I	4,1,3											in.⁴
BEAM OR WEB — GIRDER WEB STEEL	So	4,2,1											in./ft.
BEAM OR WEB — GIRDER WEB STEEL	Ko	4,2,2											in./ft.²
BEAM OR WEB — GIRDER WEB CONC. OR STEEL	Do	4,2,3											in.
BEAM OR WEB — GIRDER WEB CONC. OR STEEL	T	4,2,4											in.
BEAM OR WEB — GIRDER WEB CONC. OR STEEL	Xo	4,2,5											ft.
TOP PLATES	R	4,3,1	9.500	58.500	65.417	82.417							ft.
TOP PLATES	W	4,3,2	0.0	1.0500	0.0	1.0500							in.
TOP PLATES	T	4,3,3	0.0	.625	0.0	1.688							in.
BOTTOM PLATES	R	4,4,1	9.500	58.500	65.417	82.417							ft.
BOTTOM PLATES	W	4,4,2	0.0	1.0500	0.0	1.0500							in.
BOTTOM PLATES	T	4,4,3	0.0	.625	0.0	1.688							in.
COMPOSITE SLAB	R	4,5,1											ft.
COMPOSITE SLAB	W	4,5,2											in.
COMPOSITE SLAB	T	4,5,3											in.
COMPOSITE SLAB	e	4,5,4											in.
COMPOSITE SLAB	As	4,5,5											in.²
NON-COMP. P-LOADS	X	4,6,1	25.0 0	50.0	57.500	75.000							ft.
NON-COMP. P-LOADS	X	0,0,0											ft.
NON-COMP. P-LOADS	P	4,6,2	21.6	21.6	21.26	21.6							kips
NON-COMP. P-LOADS	P	0,0,0											kips
COMP. P-LDS.	X	4,7,1											ft.
COMP. P-LDS.	P	4,7,2											kips
NON-COMP. Wp	X	4,8,1											ft.
NON-COMP. Wp	W	4,8,2											kips/ft.
COMP. Wp	X	4,9,1											ft.
COMP. Wp	W	4,9,2											kips/ft.

CONTINUOUS BEAM ANALYSIS

SPAN 2 OF 3.

SPAN DATA

SHEET 3 OF 4.

1-4-71

STATE HIGHWAY DEPARTMENT OF GEORGIA
BRIDGE DIVISION

SPAN CARD

M	S	L ft.	Bm.	T.R.s	B.R.s	CS	PN	PC	WPN	WPC	WF	N	G
3	2	104000	3	5	5		7				1		

(REPEAT SPAN "S"; NUMBER OF RANGES; BEAM TYPE)

M = SPAN NUMBER. IF SPAN "M" (always give) IS IDENTICAL (symm.) TO SOME PREVIOUSLY DEFINED SPAN "S", ENTER SPAN NO. "S" UNDER S. NO FURTHER INPUT
L = SPAN LENGTH. REQUIRED FOR SPAN "M".

INDICATE BEAM TYPE WITH DIGIT ONE, 1.

BEAM TYPE:		LOAD CARDS REQUIRED
WF	WIDE FLANGE ROLLED BEAM	400, 401
N	NON-STANDARD BEAM	400, 411, 412, 413
G	GIRDER (Conc. or Steel)	400, 421, 422, 423, 424, 425

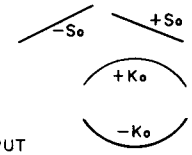

LOAD CARDS

		CODE	RANGE 1	RANGE 2	RANGE 3	RANGE 4	RANGE 5	RANGE 6	RANGE 7	RANGE 8	RANGE 9	RANGE 10	
BEAM OR WEB	RANGE	4,0,0	22500	81500	104000								ft.
BEAM OR WEB	WF Bm.	4,0,1	W36X194	W36X160	W36X194	W X	W X	W X	W X	W X	W X	W X	in. & lbs.
BEAM OR WEB, NON-STD. BM/WEB	D	4,1,1											in.
BEAM OR WEB, NON-STD. BM/WEB	A	4,1,2											in.²
BEAM OR WEB, NON-STD. BM/WEB	I	4,1,3											in.⁴
BEAM OR WEB, GIRDER WEB CONC. OR STEEL	So	4,2,1											in./ft.
BEAM OR WEB, GIRDER WEB CONC. OR STEEL	Ko	4,2,2											in./ft.²
BEAM OR WEB, GIRDER WEB CONC. OR STEEL	Do	4,2,3											in.
BEAM OR WEB, GIRDER WEB CONC. OR STEEL	T	4,2,4											in.
BEAM OR WEB, GIRDER WEB CONC. OR STEEL	Xo	4,2,5											ft.
TOP PLATES	R	4,3,1	170 0	270 0	770 0	870000	104000						ft.
TOP PLATES	W	4,3,2	10500	0 0	10500	0 0	10500						in.
TOP PLATES	T	4,3,3	1688	0 0	625	0 0	1688						in.
BOTTOM PLATES	R	4,4,1	170 0	270 0	770 0	870 0	104000						ft.
BOTTOM PLATES	W	4,4,2	10500	0 0	10500	0 0	10500						in.
BOTTOM PLATES	T	4,4,3	1688	0 0	625	0 0	1688						in.
COMPOSITE SLAB	R	4,5,1											ft.
COMPOSITE SLAB	W	4,5,2											in.
COMPOSITE SLAB	T	4,5,3											in.
COMPOSITE SLAB	e	4,5,4											in.
COMPOSITE SLAB	As	4,5,5											in.²
NON-COMP. P-LOADS	X	4,6,1	7417	250 0	32500	520 0	71500	79000	96583				ft.
NON-COMP. P-LOADS	X	0,0,0											ft.
NON-COMP. P-LOADS	P	4,6,2	216	2126	216	216	216	2126	216				kips
NON-COMP. P-LOADS	P	0,0,0											kips
COMP. P-LOADS	X	4,7,1											ft.
COMP. P-LOADS	P	4,7,2											kips
NON-COMP. Wp	X	4,8,1											ft.
NON-COMP. Wp	W	4,8,2											kips/ft.
COMP. Wp	X	4,9,1											ft.
COMP. Wp	W	4,9,2											kips/ft.

CONTINUOUS BEAM ANALYSIS

SPAN 3 OF 3.

SPAN DATA

SHEET 4 OF 4.

1-4-71

STATE HIGHWAY DEPARTMENT OF GEORGIA
BRIDGE DIVISION

SPAN CARD

1 M	S (REPEAT SPAN "S")	4 L ft.	10 NUMBER OF RANGES Bm.	T.Rs	B.Rs	CS	PN	Pc	WPN	WPC	25 BEAM TYPE WF	N	G
3	3	1											

M = SPAN NUMBER. IF SPAN "M" (always give) IS IDENTICAL (symm.) TO SOME PREVIOUSLY DEFINED SPAN "S", ENTER SPAN NO. "S" UNDER S. NO FURTHER INPUT
L = SPAN LENGTH. REQUIRED FOR SPAN "M".

INDICATE BEAM TYPE WITH DIGIT ONE, 1.

BEAM TYPE:		LOAD CARDS REQUIRED
WF	WIDE FLANGE ROLLED BEAM	400, 401
N	NON-STANDARD BEAM	400, 411, 412, 413
G	GIRDER (Conc. or Steel)	400, 421, 422, 423, 424, 425

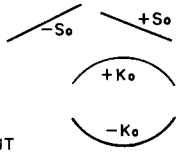

LOAD CARDS

		CODE	4 RANGE 1	11 RANGE 2	18 RANGE 3	25 RANGE 4	32 RANGE 5	39 RANGE 6	46 RANGE 7	53 RANGE 8	60 RANGE 9	67 RANGE 10	74
BEAM OR WEB	RANGE	4,0,0											ft.
BEAM OR WEB	WF Bm	4,0,1	W X	W X	W X	W X	W X	W X	W X	W X	W X	W X	in. & lbs.
BEAM OR WEB	NON-STD BM/WEB D	4,1,1											in.
BEAM OR WEB	NON-STD BM/WEB A	4,1,2											in.²
BEAM OR WEB	NON-STD BM/WEB I	4,1,3											in.⁴
BEAM OR WEB	GIRDER WEB STEEL So	4,2,1											in./ft.
BEAM OR WEB	GIRDER WEB STEEL Ko	4,2,2											in./ft.²
BEAM OR WEB	GIRDER WEB CONC. OR STEEL Do	4,2,3											in.
BEAM OR WEB	GIRDER WEB CONC. OR STEEL T	4,2,4											in.
BEAM OR WEB	GIRDER WEB CONC. OR STEEL Xo	4,2,5											ft.
TOP PLATES	R	4,3,1											ft.
TOP PLATES	W	4,3,2											in.
TOP PLATES	T	4,3,3											in.
BOTTOM PLATES	R	4,4,1											ft.
BOTTOM PLATES	W	4,4,2											in.
BOTTOM PLATES	T	4,4,3											in.
COMPOSITE SLAB	R	4,5,1											ft.
COMPOSITE SLAB	W	4,5,2											in.
COMPOSITE SLAB	T	4,5,3											in.
COMPOSITE SLAB	e	4,5,4											in.
COMPOSITE SLAB	As	4,5,5											in.²
NON-COMP. P-LOADS	X	4,6,1											ft.
NON-COMP. P-LOADS	X	0,0,0											ft.
NON-COMP. P-LOADS	P	4,6,2											kips
NON-COMP. P-LOADS	P	0,0,0											kips
COMP. P-LDS.	X	4,7,1											ft.
COMP. P-LDS.	P	4,7,2											kips
NON-COMP. Wp	X	4,8,1											ft.
NON-COMP. Wp	W	4,8,2											kips/ft.
COMP. Wp	X	4,9,1											ft.
COMP. Wp	W	4,9,2											kips/ft.

STATE HIGHWAY DEPARTMENT OF GEORGIA

BRIDGE DIVISION

01/19/71 THE ANALYSIS OF CONTINUOUS BEAMS FOR HIGHWAY BRIDGES PROB. NO. EX.3

EXAMPLE NO.3 82-1C4-82 CONTINUOUS UNIT, ROLLED BEAM WITH COVER PLATES

BEAM CONSTANTS

BEAM IDENTITY	NO. OF SPANS	LIVE LOAD CLASS	BEAM TYPE	WDLNC	WDLC	WSW	WG	E	BM.SPAC.	SZR
EXAMPLE NO.3	3	HS20	NONC.ST'L.INT.	0.855	0.0	0.0	490.0	29.00	6.5000	0.0

OPTIONAL BEAM CONSTANTS

DFM	DFVE	DFD	N	3N	LIVE LOAD USED	STRESS CYCLES	FY	FU	FC	FS
1.1818	1.1818	0.8000	0	0	TR'K LANE MIL.	500000	36.000	58.000	0.0	0.0

SPAN 1 INPUT DATA

M	S	L	* NUMBER OF RANGES								* BEAM SECTION TYPE
			BM	TPL	BPL	CS	PN	PC	PWN	PWC	
1	0	82.417	2	4	4	0	4	0	0	0	WFLG

BEAM SECTION AND LOADS

CODE	RANGE 1	RANGE 2	RANGE 3	RANGE 4	RANGE 5	RANGE 6	RANGE 7	RANGE 8	RANGE 9	RANGE 10
400	59.917	82.417								
401	W36X160	W36X194								
431	9.500	58.500	65.417	82.417						
432	0.0	10.500	0.0	10.500						
433	0.0	0.625	0.0	1.688						
441	9.500	58.500	65.417	82.417						
442	0.0	10.500	0.0	10.500						
443	0.0	0.625	0.0	1.688						
461	25.000	50.000	57.500	75.000						
462	0.216	0.216	2.126	0.216						

EXAMPLE NO.3 SPAN 2 INPUT DATA

M	S	L	*	NUMBER OF RANGES							* BEAM SECTION TYPE
			BM	TPL	BPL	CS	PN	PC	PWN	PWC	
2	0	104.000	3	5	5	0	7	C	0	0	WFLG

BEAM SECTION AND LOADS

CODE	RANGE 1	RANGE 2	RANGE 3	RANGE 4	RANGE 5	RANGE 6	RANGE 7	RANGE 8	RANGE 9	RANGE 10
400	22.500	81.500	104.000							
401	W36X194	W36X160	W36X194							
431	17.000	27.000	77.000	87.000	104.000					
432	10.500	0.0	10.500	0.0	10.500					
433	1.688	0.0	0.625	0.0	1.688					
441	17.000	27.000	77.000	87.000	104.000					
442	10.500	0.0	10.500	0.0	10.500					
443	1.688	0.0	0.625	0.0	1.688					
461	7.417	25.000	32.500	52.000	71.500	79.000	96.583			
462	0.216	2.126	0.216	0.216	0.216	2.126	0.216			

SPAN 3 INPUT DATA SAME AS SPAN 1 INPUT DATA

EXAMPLE NO.3

BEAM SECTION PROPERTIES AT SPAN TWENTIETH POINTS

S.PT	D.WEB	I	SM.BS	SM.TS	SM.TC	Q/I	S.PT	D.WEB	I	SM.BS	SM.TS	SM.TC	Q/I
1.00	36.00	9760.0	542.2	542.2	0.0	0.0	1.05	36.00	9760.0	542.2	542.2	0.0	0.0
1.10	36.00	9760.0	542.2	542.2	0.0	0.0	1.15	36.00	14161.9	760.4	760.4	0.0	0.0
1.20	36.00	14161.9	760.4	760.4	0.0	0.0	1.25	36.00	14161.9	760.4	760.4	0.0	0.0
1.30	36.00	14161.9	760.4	760.4	0.0	0.0	1.35	36.00	14161.9	760.4	760.4	0.0	0.0
1.40	36.00	14161.9	760.4	760.4	0.0	0.0	1.45	36.00	14161.9	760.4	760.4	0.0	0.0
1.50	36.00	14161.9	760.4	760.4	0.0	0.0	1.55	36.00	14161.9	760.4	760.4	0.0	0.0
1.60	36.00	14161.9	760.4	760.4	0.0	0.0	1.65	36.00	14161.9	760.4	760.4	0.0	0.0
1.70	36.00	14161.9	760.4	760.4	0.0	0.0	1.75	36.48	12100.0	663.4	663.4	0.0	0.0
1.80	36.48	25018.5	1255.4	1255.4	0.0	0.0	1.85	36.48	25018.5	1255.4	1255.4	0.0	0.0
1.90	36.48	25018.5	1255.4	1255.4	0.0	0.0	1.95	36.48	25018.5	1255.4	1255.4	0.0	0.0
2.00	36.48	25018.5	1255.4	1255.4	0.0	0.0							
							2.05	36.48	25018.5	1255.4	1255.4	0.0	0.0
2.10	36.48	25018.5	1255.4	1255.4	0.0	0.0	2.15	36.48	25018.5	1255.4	1255.4	0.0	0.0
2.20	36.48	12100.0	663.4	663.4	0.0	0.0	2.25	36.00	9760.0	542.2	542.2	0.0	0.0
2.30	36.00	14161.9	760.4	760.4	0.0	0.0	2.35	36.00	14161.9	760.4	760.4	0.0	0.0
2.40	36.00	14161.9	760.4	760.4	0.0	0.0	2.45	36.00	14161.9	760.4	760.4	0.0	0.0
2.50	36.00	14161.9	760.4	760.4	0.0	0.0	2.55	36.00	14161.9	760.4	760.4	0.0	0.0
2.60	36.00	14161.9	760.4	760.4	0.0	0.0	2.65	36.00	14161.9	760.4	760.4	0.0	0.0
2.70	36.00	14161.9	760.4	760.4	0.0	0.0	2.75	36.00	9760.0	542.2	542.2	0.0	0.0
2.80	36.48	12100.0	663.4	663.4	0.0	0.0	2.85	36.48	25018.5	1255.4	1255.4	0.0	0.0
2.90	36.48	25018.5	1255.4	1255.4	0.0	0.0	2.95	36.48	25018.5	1255.4	1255.4	0.0	0.0
3.00	36.48	25018.5	1255.4	1255.4	0.0	0.0							
							3.05	36.48	25018.5	1255.4	1255.4	0.0	0.0
3.10	36.48	25018.5	1255.4	1255.4	0.0	0.0	3.15	36.48	25018.5	1255.4	1255.4	0.0	0.0
3.20	36.48	25018.5	1255.4	1255.4	0.0	0.0	3.25	36.48	12100.0	663.4	663.4	0.0	0.0
3.30	36.00	14161.9	760.4	760.4	0.0	0.0	3.35	36.00	14161.9	760.4	760.4	0.0	0.0
3.40	36.00	14161.9	760.4	760.4	0.0	0.0	3.45	36.00	14161.9	760.4	760.4	0.0	0.0
3.50	36.00	14161.9	760.4	760.4	0.0	0.0	3.55	36.00	14161.9	760.4	760.4	0.0	0.0
3.60	36.00	14161.9	760.4	760.4	0.0	0.0	3.65	36.00	14161.9	760.4	760.4	0.0	0.0
3.70	36.00	14161.9	760.4	760.4	0.0	0.0	3.75	36.00	14161.9	760.4	760.4	0.0	0.0
3.80	36.00	14161.9	760.4	760.4	0.0	0.0	3.85	36.00	14161.9	760.4	760.4	0.0	0.0
3.90	36.00	9760.0	542.2	542.2	0.0	0.0	3.95	36.00	9760.0	542.2	542.2	0.0	0.0
4.00	36.00	9760.0	542.2	542.2	0.0	0.0							

SPAN PROPERTIES

SPAN	DL	KL	KLM	CLR	CLRM	CRLM	CRL	KRM	KR	DR
1	1.000000	0.006456	0.005426	0.605161	0.287248	0.0	0.438584	0.006544	0.008908	0.525336
2	0.474664	0.007108	0.005913	0.568421	0.327563	0.327563	0.568423	0.005913	0.007108	0.474662
3	C.525338	0.0C8908	0.C06544	0.438582	0.0	0.287248	0.605162	0.005426	0.006456	1.000000

EXAMPLE NO.3 MOMENTS(KIP-FEET) AT SPAN TENTH AND MISC. POINTS

*	NON-COMPOSITE DEAD LOADS					*	COMPOSITE DEAD LOADS				*	LIVE LOADS				*	TOTALS	
S.P	BEAM	PN	WDLNC	WPN	TOT.NC	*	PC	WDLC	WPC	TOT.C	*	SWK.+	SWK.-	LL+I +	LL+I -	*	MAX.+	MAX.-
1.1	41.2	2.3	177.2	-0.0	220.7		0.0	0.0	0.0	0.0		0.0	0.0	318.4 T	-52.7 T		539.1	168.0
1.2	70.4	4.6	296.4	-0.0	371.3		0.0	0.0	0.0	0.0		0.0	0.0	531.4 T	-105.4 T		902.7	265.9
1.3	85.6	6.8	357.5	-0.0	450.0		0.0	0.0	0.0	0.0		0.0	0.0	648.0 T	-158.1 T		1097.9	291.8
1.4	87.0	7.4	360.5	-0.0	454.9		0.0	0.0	0.0	0.0		0.0	0.0	695.1 T	-210.8 T		1150.0	244.1
1.5	74.4	7.9	305.5	-0.0	387.8		0.0	0.0	0.0	0.0		0.0	0.0	675.5 T	-263.6 T		1063.2	124.2
1.6	47.9	8.4	192.3	-0.0	248.6		0.0	0.0	0.0	0.0		0.0	0.0	600.0 T	-316.3 T		848.6	-67.6
1.7	7.5	6.8	21.1	-0.0	35.4		0.0	0.0	0.0	0.0		0.0	0.0	461.0 T	-369.0 T		496.5	-333.5
1.8	-46.2	-12.0	-208.2	-0.0	-266.4		0.0	0.0	0.0	0.0		0.0	0.0	277.4 T	-421.7 T		11.1	-688.1
1.9	-118.1	-30.8	-495.5	-0.0	-644.4		0.0	0.0	0.0	0.0		0.0	0.0	139.6 L	-525.4 L		-504.8	-1169.8
2.0	-211.3	-51.2	-841.0	0.0	-1103.5		0.0	0.0	0.0	0.0		0.0	0.0	143.5 T	-782.3 L		-960.0	-1885.8
2.1	-101.1	-24.1	-424.8	-0.0	-550.0		0.0	0.0	0.0	0.0		0.0	0.0	134.4 M	-456.1 L		-415.7	-1006.1
2.2	-24.1	1.4	-101.2	-0.0	-123.8		0.0	0.0	0.0	0.0		0.0	0.0	319.4 T	-321.7 T		195.6	-445.6
2.3	30.4	13.7	130.0	-0.0	174.2		0.0	0.0	0.0	0.0		0.0	0.0	510.9 T	-263.6 T		685.0	-89.4
2.4	63.7	15.1	268.7	-0.0	347.5		0.0	0.0	0.0	0.0		0.0	0.0	631.2 T	-225.1 L		978.7	122.4
2.5	74.8	16.2	315.0	-0.0	406.0		0.0	0.0	0.0	0.0		0.0	0.0	665.0 T	-225.1 L		1071.0	180.9
2.6	63.7	15.1	268.7	-0.0	347.5		0.0	0.0	0.0	0.0		0.0	0.0	631.2 T	-225.1 L		978.7	122.4
2.7	30.4	13.7	130.0	-0.0	174.2		0.0	0.0	0.0	0.0		0.0	0.0	510.9 T	-263.6 T		685.0	-89.4
2.8	-24.1	1.4	-101.2	-0.0	-123.8		0.0	0.0	0.0	0.0		0.0	0.0	319.4 T	-321.7 T		195.6	-445.6
2.9	-101.1	-24.1	-424.8	-0.0	-550.0		0.0	0.0	0.0	0.0		0.0	0.0	134.4 M	-456.1 L		-415.7	-1006.1
3.0	-211.3	-51.2	-841.0	0.0	-1103.5		0.0	0.0	0.0	0.0		0.0	0.0	143.5 T	-782.3 L		-960.0	-1885.8
3.1	-118.1	-30.8	-495.5	-0.0	-644.4		0.0	0.0	0.0	0.0		0.0	0.0	139.6 L	-525.4 L		-504.8	-1169.8
3.2	-46.2	-12.0	-208.2	-0.0	-266.4		0.0	0.0	0.0	0.0		0.0	0.0	277.4 T	-421.7 T		11.1	-688.1
3.3	7.5	6.8	21.1	-0.0	35.4		0.0	0.0	0.0	0.0		0.0	0.0	461.0 T	-369.0 T		496.5	-333.5
3.4	47.9	8.4	192.3	-0.0	248.6		0.0	0.0	0.0	0.0		0.0	0.0	600.0 T	-316.3 T		848.6	-67.6
3.5	74.4	7.9	305.5	-0.0	387.8		0.0	0.0	0.0	0.0		0.0	0.0	675.5 T	-263.6 T		1063.2	124.2
3.6	87.0	7.4	360.5	-0.0	454.9		0.0	0.0	0.0	0.0		0.0	0.0	695.1 T	-210.8 T		1150.0	244.0
3.7	85.6	6.8	357.5	-0.0	450.0		0.0	0.0	0.0	0.0		0.0	0.0	648.0 T	-158.1 T		1097.9	291.8
3.8	70.4	4.6	296.4	-0.0	371.3		0.0	0.0	0.0	0.0		0.0	0.0	531.4 T	-105.4 T		902.7	265.9
3.9	41.2	2.3	177.2	-0.0	220.7		0.0	0.0	0.0	0.0		0.0	0.0	318.4 T	-52.7 T		539.1	168.0
1.115					248.5					0.0		0.0	0.0	356.5	-60.8		605.0	187.8
1.710					8.0					0.0		0.0	0.0	432.1	-366.9		440.1	-358.9
1.727					-38.8					0.0		0.0	0.0	405.2	-377.2		366.4	-416.0
1.794					-243.4					0.0		0.0	0.0	300.8	-424.3		57.4	-667.7
2.163					-264.8					0.0		0.0	0.0	232.6	-350.6		-32.2	-615.4
2.216					-66.8					0.0		0.0	0.0	360.7	-314.7		293.9	-381.5
2.260					69.1					0.0		0.0	0.0	435.2	-279.7		504.3	-210.5
2.740					69.1					0.0		0.0	0.0	435.2	-279.7		504.3	-210.5
2.784					-66.8					0.0		0.0	0.0	360.7	-314.7		293.9	-381.5
2.837					-264.8					0.0		0.0	0.0	232.6	-350.6		-32.2	-615.4
3.206					-243.4					0.0		0.0	0.0	300.8	-424.3		57.4	-667.7
3.273					-38.8					0.0		0.0	0.0	405.2	-377.2		366.4	-416.0
3.290					8.0					0.0		0.0	0.0	432.1	-366.9		440.1	-358.9
3.885					248.5					0.0		0.0	0.0	356.5	-60.8		605.0	187.8

EXAMPLE NO.3

STRESSES AT SPAN TENTH AND MISCELLANEOUS POINTS

*	ACTUAL STRESSES(PSI)									*	ALLOWABLE FATIGUE STRESSES(PSI)							
	TOTAL DEAD LOAD			D.L. + L.L. POS.			D.L. + L.L. NEG.			* BASE METAL		BASE M. ADJ.		BASE M. ADJ.		BASE M. ADJ.		FLANGE
	TOP	TOP	BOT.	TOP	TOP	BOT.	TOP	TOP	BOT.	TOP	BOT.	FILLET WELD		CON.FIL.WELD		BUTT WELD		W STUD
S.PT.	CONC.	STEEL	STEEL	CONC.	STEEL	STEEL	CONC.	STEEL	STEEL	STEEL	STEEL	TOP S	BOT.S	TOP S	BOT.S	TOP S	BOT.S	TOP S
1.100	0	4885	-4885	0	11931	-11931	0	3718	-3718	20000	20000	18159	18159	20000	20000	20000	-20000	20000
1.200	0	5860	-5860	0	14246	-14246	0	4196	-4196	20000	20000	17719	17719	20000	20000	20000	-20000	20000
1.300	0	7101	-7101	0	17327	-17327	0	4605	-4605	20000	20000	17025	17025	20000	20000	20000	-20000	20000
1.400	0	7179	-7179	0	18149	-18149	0	3851	-3851	20000	20000	15867	15867	20000	20000	20000	-19805	20000
1.500	0	6119	-6119	0	16779	-16779	0	1960	-1960	20000	20000	14153	14153	20000	20000	20000	-18543	20000
1.600	0	3923	-3923	0	13392	-13392	0	-1067	1067	20000	20000	11577	11577	20000	20000	18679	-16390	20000
1.700	0	559	-559	0	7835	-7835	0	-5263	5263	20000	20000	7476	7476	16448	16448	12533	-12142	20000
1.800	0	-2546	2546	0	105	-105	0	-6576	6576	20000	20000	12301	12301	20000	20000	-17029	19718	20000
1.900	0	-6159	6159	0	-4825	4825	0	-11181	11181	20000	20000	20000	20000	20000	20000	-20000	20000	20000
2.000	0	-10547	10547	0	-9175	9175	0	-18025	18025	20000	20000	20000	20000	20000	20000	-20000	20000	20000
2.100	0	-5257	5257	0	-3973	3973	0	-9616	9616	20000	20000	20000	20000	20000	20000	-20000	20000	20000
2.200	0	-2240	2240	0	3537	-3537	0	-8060	8060	20000	20000	8687	8687	19112	19112	-13520	14396	20000
2.300	0	2748	-2748	0	10811	-10811	0	-1411	1411	20000	20000	11056	11056	20000	20000	17924	-15912	20000
2.400	0	5484	-5484	0	15446	-15446	0	1931	-1931	20000	20000	14286	14286	20000	20000	20000	-18645	20000
2.500	0	6406	-6406	0	16902	-16902	0	2854	-2854	20000	20000	15039	15039	20000	20000	20000	-19211	20000
2.600	0	5484	-5484	0	15446	-15446	0	1931	-1931	20000	20000	14286	14286	20000	20000	20000	-18645	20000
2.700	0	2748	-2748	0	10811	-10811	0	-1411	1411	20000	20000	11056	11056	20000	20000	17924	-15912	20000
2.800	0	-2240	2240	0	3537	-3537	0	-8060	8060	20000	20000	8687	8687	19112	19112	-13520	14396	20000
2.900	0	-5257	5257	0	-3973	3973	0	-9616	9616	20000	20000	20000	20000	20000	20000	-20000	20000	20000
3.000	0	-10547	10547	0	-9175	9175	0	-18025	18025	20000	20000	20000	20000	20000	20000	-20000	20000	20000
3.100	0	-6159	6159	0	-4825	4825	0	-11181	11181	20000	20000	20000	20000	20000	20000	-20000	20000	20000
3.200	0	-2546	2546	0	105	-105	0	-6576	6576	20000	20000	12301	12301	20000	20000	-17029	19718	20000
3.300	0	559	-559	0	7835	-7835	0	-5263	5263	20000	20000	7476	7476	16448	16448	12532	-12142	20000
3.400	0	3923	-3923	0	13392	-13392	0	-1067	1067	20000	20000	11577	11577	20000	20000	18679	-16390	20000
3.500	0	6119	-6119	0	16779	-16779	0	1960	-1960	20000	20000	14153	14153	20000	20000	20000	-18542	20000
3.600	0	7179	-7179	0	18149	-18149	0	3851	-3851	20000	20000	15867	15867	20000	20000	20000	-19805	20000
3.700	0	7101	-7101	0	17327	-17327	0	4605	-4605	20000	20000	17025	17025	20000	20000	20000	-20000	20000
3.800	0	5860	-5860	0	14246	-14246	0	4196	-4196	20000	20000	17719	17719	20000	20000	20000	-20000	20000
3.900	0	4885	-4885	0	11931	-11931	0	3718	-3718	20000	20000	18159	18159	20000	20000	20000	-20000	20000

EXAMPLE NO.3 STRESSES AT SPAN TENTH AND MISCELLANEOUS POINTS

	* ACTUAL STRESSES(PSI)									* ALLOWABLE FATIGUE STRESSES(PSI)								
	TOTAL DEAD LOAD			C.L. + L.L. POS.			D.L. + L.L. NEG.			* BASE METAL		BASE M. ADJ.		BASE M. ADJ.		BASE M. ADJ.		FLANGE
	TOP	TOP	BOT.	TOP	TOP	BOT.	TOP	TOP	BOT.	TOP	BOT.	FILLET WELD		CON.FIL.WELD		BUTT WELD		W STUD
S.PT.	CONC.	STEEL	STEEL	CONC.	STEEL	STEEL	CONC.	STEEL	STEEL	STEEL	STEEL	TOP S	BOT.S	TOP S	BOT.S	TOP S	BOT.S	TOP S
1.115	0	5499	-5499	0	13389	-13389	0	4155	-4155	20000	20000	18124	18124	20000	20000	20000	-20000	20000
1.115	0	3921	-3921	0	9548	-9548	0	2963	-2963	20000	20000	18124	18124	20000	20000	20000	-20000	20000
1.710	0	126	-126	0	6945	-6945	0	-5663	5663	19829	19829	6885	6885	15147	15147	11606	-11424	20000
1.710	0	176	-176	0	9739	-9739	0	-7942	7942	19829	19829	6885	6885	15147	15147	11606	-11424	20000
1.727	0	-858	858	0	8108	-8108	0	-9205	9205	19140	19140	6645	6645	14621	14621	-11124	11228	20000
1.727	0	-701	701	0	6627	-6627	0	-7524	7524	19140	19140	6645	6645	14621	14621	-11124	11228	20000
1.794	0	-4402	4402	0	1038	-1038	0	-12078	12078	20000	20000	11510	11510	20000	20000	-16329	18583	20000
1.794	0	-2326	2326	0	548	-548	0	-6382	6382	20000	20000	11510	11510	20000	20000	-16329	18583	20000
2.163	0	-2531	2531	0	-307	307	0	-5882	5882	20000	20000	13190	13190	20000	20000	-17776	20000	20000
2.163	0	-4789	4789	0	-582	582	0	-11132	11132	20000	20000	13190	13190	20000	20000	-17776	20000	20000
2.216	0	-1209	1209	0	5316	-5316	0	-6901	6901	20000	20000	7060	7060	15533	15533	-11640	11882	20000
2.216	0	-1479	1479	0	6504	-6504	0	-8443	8443	20000	20000	7060	7060	15533	15533	-11640	11882	20000
2.260	0	1529	-1529	0	11161	-11161	0	-4659	4659	20000	20000	8818	8818	19400	19400	14596	-13663	20000
2.260	0	1091	-1091	0	7959	-7959	0	-3322	3322	20000	20000	8818	8818	19400	19400	14596	-13663	20000
2.740	0	1090	-1090	0	7959	-7959	0	-3322	3322	20000	20000	8818	8818	19400	19400	14596	-13663	20000
2.740	0	1529	-1529	0	11161	-11161	0	-4659	4659	20000	20000	8818	8818	19400	19400	14596	-13663	20000
2.784	0	-1479	1479	0	6504	-6504	0	-8443	8443	20000	20000	7060	7060	15533	15533	-11640	11882	20000
2.784	0	-1209	1209	0	5316	-5316	0	-6901	6901	20000	20000	7060	7060	15533	15533	-11640	11882	20000
2.837	0	-4789	4789	0	-582	582	0	-11131	11131	20000	20000	13190	13190	20000	20000	-17776	20000	20000
2.837	0	-2530	2530	0	-307	307	0	-5882	5882	20000	20000	13190	13190	20000	20000	-17776	20000	20000
3.206	0	-2326	2326	0	548	-548	0	-6382	6382	20000	20000	11510	11510	20000	20000	-16329	18583	20000
3.206	0	-4403	4403	0	1038	-1038	0	-12078	12078	20000	20000	11510	11510	20000	20000	-16329	18583	20000
3.273	0	-701	701	0	6627	-6627	0	-7524	7524	19140	19140	6646	6646	14621	14621	-11124	11228	20000
3.273	0	-858	858	0	8108	-8108	0	-9205	9205	19140	19140	6646	6646	14621	14621	-11124	11228	20000
3.290	0	176	-176	0	9739	-9739	0	-7942	7942	19829	19829	6885	6885	15147	15147	11606	-11424	20000
3.290	0	126	-126	0	6945	-6945	0	-5663	5663	19829	19829	6885	6885	15147	15147	11606	-11424	20000
3.885	0	3921	-3921	0	9548	-9548	0	2963	-2963	20000	20000	18124	18124	20000	20000	20000	-20000	20000
3.885	0	5499	-5499	0	13389	-13389	0	4155	-4155	20000	20000	18124	18124	20000	20000	20000	-20000	20000

EXAMPLE NO.3 SHEARS(KIPS) AND SHEAR CONNECTOR SPACINGS(INCHES) AT SPAN TENTH POINTS AND REACTIONS(KIPS)

	DEAD LOADS						*		LIVE LOADS		* MAXIMUM	LL SHEAR	SHEAR
S.PT	BEAM	PN	WN	WPN	TOT.C	TOT.DL *	SWK.+	SWK.-	LL+I +	LL+I - *	V OR R	RANGE	CON.SP.
1.00	5.660	0.277	25.029	0.0	0.0	30.966	0.0	0.0	45.225 T	-6.764 T	76.191		
1.10	4.339	0.277	17.983	-0.0	0.0	22.599	0.0	0.0	38.941 T	-6.803 L	61.540		
1.20	2.696	0.277	10.936	-0.0	0.0	13.909	0.0	0.0	32.780 T	-10.101 L	46.689		
1.30	1.007	0.277	3.889	-0.0	0.0	5.174	0.0	0.0	26.822 T	-13.834 L	31.995		
1.40	-0.682	0.061	-3.157	-0.0	0.0	-3.778	0.0	0.0	21.161 T	-19.816 T	-23.594		
1.50	-2.371	0.061	-10.204	-0.0	0.0	-12.514	0.0	0.0	15.887 T	-26.300 T	-38.813		
1.60	-4.059	0.061	-17.251	-0.0	0.0	-21.249	0.0	0.0	10.975 T	-32.078 T	-53.327		
1.70	-5.748	-2.281	-24.297	-0.0	0.0	-32.327	0.0	0.0	6.823 T	-37.286 T	-69.613		
1.80	-7.417	-2.281	-31.344	-0.0	0.0	-41.042	0.0	0.0	3.940 M	-41.830 T	-82.871		
1.90	-10.015	-2.281	-38.391	-0.0	0.0	-50.687	0.0	0.0	2.176 L	-45.734 T	-96.421		
2.00	-12.613	-2.497	-45.437	-0.0	0.0	-60.547	0.0	0.0	0.919 L	-49.002 T	-109.549		
R1-2	24.848	5.163	89.897	0.0	0.0	119.909	0.0		71.420 L		191.328		
2.00	12.235	2.666	44.460	0.0	0.0	59.361	0.0	0.0	48.257 T	-5.914 T	107.618		
2.10	8.956	2.450	35.568	-0.0	0.0	46.974	0.0	0.0	44.243 T	-5.914 T	91.218		
2.20	6.148	2.450	26.676	-0.0	0.0	35.274	0.0	0.0	39.381 T	-6.805 L	74.655		
2.30	4.263	0.324	17.784	-0.0	0.0	22.370	0.0	0.0	33.743 T	-9.944 L	56.114		
2.40	2.131	0.108	8.892	-0.0	0.0	11.131	0.0	0.0	27.642 T	-15.315 T	38.773		
2.50	-0.000	0.108	-0.000	-0.0	0.0	0.108	0.0	0.0	21.395 T	-21.395 T	21.503		
2.60	-2.131	-0.108	-8.892	-0.0	0.0	-11.131	0.0	0.0	15.315 T	-27.642 T	-38.774		
2.70	-4.263	-0.324	-17.784	-0.0	0.0	-22.371	0.0	0.0	9.944 L	-33.743 T	-56.114		
2.80	-6.148	-2.450	-26.676	-0.0	0.0	-35.274	0.0	0.0	6.805 L	-39.381 T	-74.655		
2.90	-8.957	-2.450	-35.568	-0.0	0.0	-46.975	0.0	0.0	5.914 T	-44.244 T	-91.218		
3.00	-12.235	-2.666	-44.460	-0.0	0.0	-59.361	0.0	0.0	5.914 T	-48.257 T	-107.618		
R2-3	24.848	5.163	89.897	0.0	0.0	119.908	0.0		71.420 L		191.328		
3.00	12.613	2.497	45.437	0.0	0.0	60.547	0.0	0.0	49.002 T	-0.919 L	109.549		
3.10	10.015	2.281	38.391	-0.0	0.0	50.686	0.0	0.0	45.734 T	-2.176 L	96.421		
3.20	7.417	2.281	31.344	-0.0	0.0	41.042	0.0	0.0	41.830 T	-3.940 M	82.871		
3.30	5.748	2.281	24.297	-0.0	0.0	32.327	0.0	0.0	37.286 T	-6.823 T	69.613		
3.40	4.059	-0.061	17.251	-0.0	0.0	21.249	0.0	0.0	32.078 T	-10.975 T	53.327		
3.50	2.370	-0.061	10.204	-0.0	0.0	12.513	0.0	0.0	26.299 T	-15.887 T	38.813		
3.60	0.681	-0.061	3.157	-0.0	0.0	3.778	0.0	0.0	19.816 T	-21.161 T	23.594		
3.70	-1.008	-0.277	-3.889	-0.0	0.0	-5.174	0.0	0.0	13.834 L	-26.822 T	-31.996		
3.80	-2.697	-0.277	-10.936	-0.0	0.0	-13.909	0.0	0.0	10.101 L	-32.780 T	-46.689		
3.90	-4.339	-0.277	-17.983	-0.0	0.0	-22.599	0.0	0.0	6.803 L	-38.941 T	-61.540		
4.00	-5.660	-0.277	-25.029	-0.0	0.0	-30.966	0.0	0.0	6.764 T	-45.225 T	-76.191		

SPAN 1 V LANE = 17.539 V 14 FT. = 18.382 SPAN 3 V LANE = 17.539 V 14 FT. = 18.382

EXAMPLE NO.3

DEAD LOAD DEFLECTIONS(INCHES) AT SPAN TWENTIETH POINTS

S.PT	BEAM	PN	WN	WPN	TOT.NC	TOT.C	TOT.DL	S.PT	BEAM	PN	WN	WPN	TOT.NC	TOT.C	TOT.DL
1.05	0.037	0.003	0.155	0.0	0.195	0.0	0.195	1.10	0.072	0.006	0.300	0.0	0.378	0.0	0.378
1.15	0.104	0.008	0.429	0.0	0.541	0.0	0.541	1.20	0.131	0.011	0.541	0.0	0.682	0.0	0.682
1.25	0.153	0.013	0.632	0.0	0.797	0.0	0.797	1.30	0.169	0.015	0.698	0.0	0.882	0.0	0.882
1.35	0.180	0.016	0.740	0.0	0.935	0.0	0.935	1.40	0.184	0.016	0.755	0.0	0.956	0.0	0.956
1.45	0.182	0.016	0.745	0.0	0.943	0.0	0.943	1.50	0.174	0.016	0.710	0.0	0.900	0.0	0.900
1.55	0.161	0.015	0.654	0.0	0.830	0.0	0.830	1.60	0.143	0.014	0.579	0.0	0.736	0.0	0.736
1.65	0.122	0.011	0.491	0.0	0.625	0.0	0.625	1.70	0.099	0.009	0.395	0.0	0.503	0.0	0.503
1.75	0.075	0.006	0.298	0.0	0.379	0.0	0.379	1.80	0.053	0.003	0.208	0.0	0.264	0.0	0.264
1.85	0.033	0.000	0.129	0.0	0.162	0.0	0.162	1.90	0.017	-0.001	0.064	0.0	0.079	0.0	0.079
1.95	0.005	-0.001	0.018	0.0	0.022	0.0	0.022								
2.05	0.005	0.005	0.021	0.0	0.031	0.0	0.031	2.10	0.019	0.011	0.083	0.0	0.113	0.0	0.113
2.15	0.040	0.020	0.172	0.0	0.232	0.0	0.232	2.20	0.066	0.029	0.281	0.0	0.376	0.0	0.376
2.25	0.095	0.038	0.405	0.0	0.538	0.0	0.538	2.30	0.123	0.046	0.525	0.0	0.695	0.0	0.695
2.35	0.149	0.052	0.632	0.0	0.832	0.0	0.832	2.40	0.168	0.056	0.714	0.0	0.939	0.0	0.939
2.45	0.181	0.059	0.766	0.0	1.006	0.0	1.006	2.50	0.185	0.060	0.784	0.0	1.029	0.0	1.029
2.55	0.181	0.059	0.766	0.0	1.006	0.0	1.006	2.60	0.168	0.056	0.714	0.0	0.939	0.0	0.939
2.65	0.149	0.052	0.632	0.0	0.832	0.0	0.832	2.70	0.123	0.046	0.525	0.0	0.695	0.0	0.695
2.75	0.095	0.038	0.405	0.0	0.538	0.0	0.538	2.80	0.066	0.029	0.281	0.0	0.376	0.0	0.376
2.85	0.040	0.020	0.172	0.0	0.232	0.0	0.232	2.90	0.019	0.011	0.083	0.0	0.113	0.0	0.113
2.95	0.005	0.005	0.021	0.0	0.031	0.0	0.031								
3.05	0.005	-0.001	0.018	0.0	0.022	0.0	0.022	3.10	0.017	-0.001	0.064	0.0	0.079	0.0	0.079
3.15	0.033	0.000	0.129	0.0	0.162	0.0	0.162	3.20	0.053	0.003	0.208	0.0	0.264	0.0	0.264
3.25	0.075	0.006	0.298	0.0	0.379	0.0	0.379	3.30	0.099	0.009	0.395	0.0	0.503	0.0	0.503
3.35	0.122	0.011	0.491	0.0	0.625	0.0	0.625	3.40	0.143	0.014	0.580	0.0	0.736	0.0	0.736
3.45	0.161	0.015	0.654	0.0	0.830	0.0	0.830	3.50	0.174	0.016	0.710	0.0	0.900	0.0	0.900
3.55	0.182	0.016	0.745	0.0	0.943	0.0	0.943	3.60	0.184	0.016	0.755	0.0	0.956	0.0	0.956
3.65	0.180	0.016	0.740	0.0	0.935	0.0	0.935	3.70	0.169	0.015	0.698	0.0	0.882	0.0	0.882
3.75	0.153	0.013	0.632	0.0	0.797	0.0	0.797	3.80	0.131	0.011	0.541	0.0	0.682	0.0	0.682
3.85	0.104	0.008	0.429	0.0	0.541	0.0	0.541	3.90	0.072	0.006	0.300	0.0	0.378	0.0	0.378
3.95	0.037	0.003	0.155	0.0	0.195	0.0	0.195								

LIVE LOAD DEFLECTIONS(INCHES)

SPAN	AT	LANE	TRUCK	MIL.	SIDEWALK	L/800
1	0.500 L	0.938	1.132	0.816	0.0	1.236
2	0.500 L	1.250	1.491	1.057	0.0	1.560
3	0.500 L	0.938	1.132	0.816	0.0	1.236

EXAMPLE NO. 3: COMMENTS

The continuous unit given in Example 3 is comprised of wide-flange rolled beam sections with cover plates. Note that only the standard beam designation is required to describe each beam section, for example: W36X160. The properties of the beam sections are stored in the program for use in the analysis.

An inspection of the output data shows that the beam is about 10% understressed over the supports and in the end spans. In the center span the beam is about 15% understressed. The allowable fatigue stress adjacent to butt welds (beam splice) has not been exceeded. However, the allowable fatigue stress adjacent to fillet welds (end of cover plate) has been exceeded at two points in each of the three spans.

EXAMPLE NO. 4: 57-77-77-57 CONTINUOUS R.C. T-BEAM

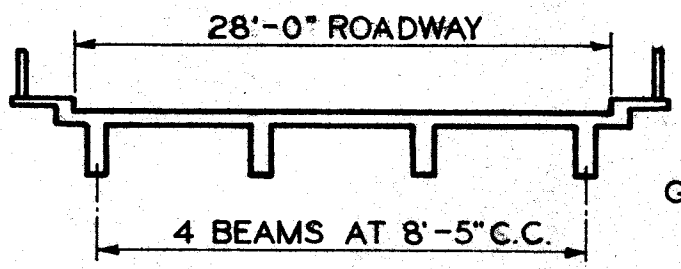

BRIDGE CROSS SECTION

LIVE LOAD: HS 20 and Military

$D^F_{Ve} = D^F_M$

W_{SW} = NONE

$D^F_D = 1.0$

GIVEN:

$W_{DL_{RC}} = 290$ LB/FT.

$W_G = 150.0$ LB/FT.^{3}

Fc = 1.350 ksi
Fs = 24.0 ksi
n = 8

INVESTIGATE INTERIOR BEAM

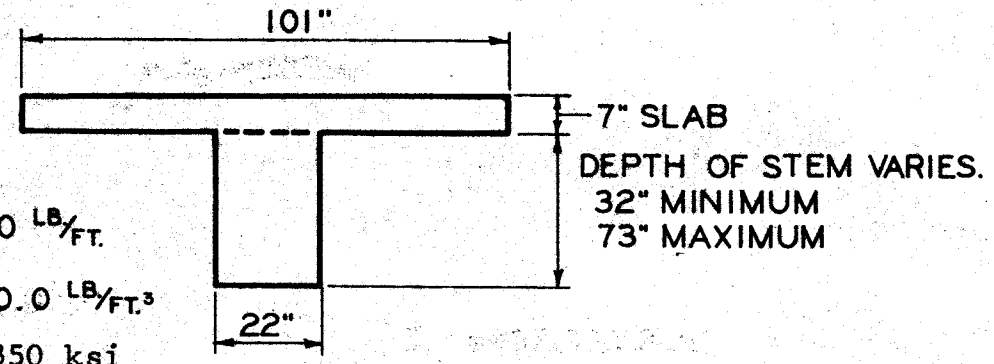

E = 1.50 10^6 LB/IN.^{2} (LONG TERM)

BEAM CROSS SECTION

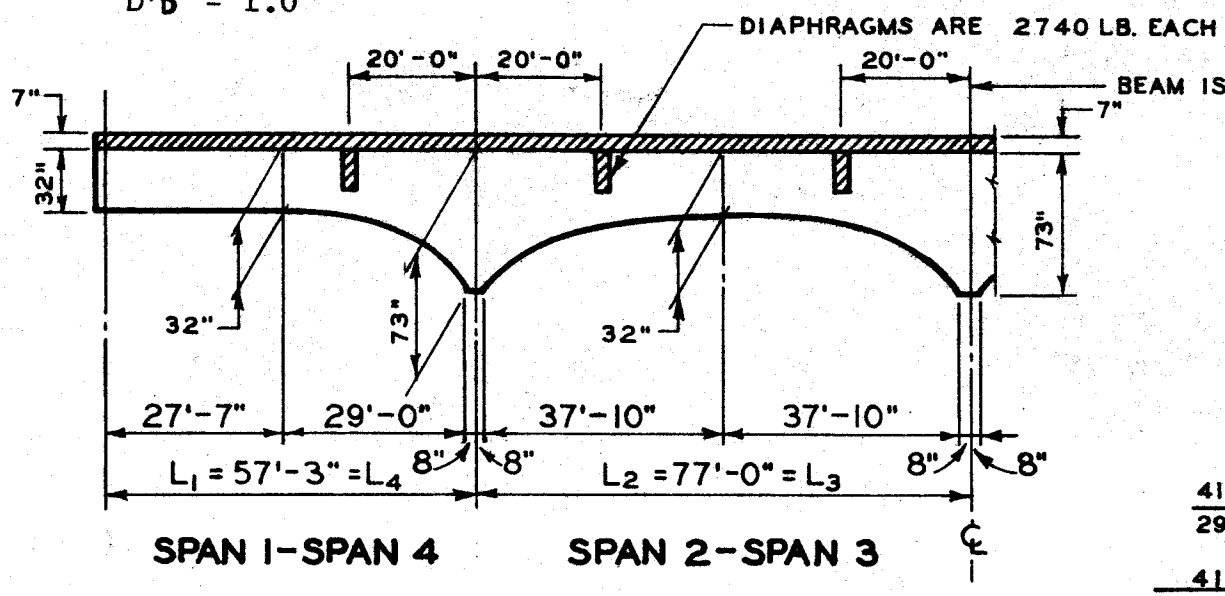

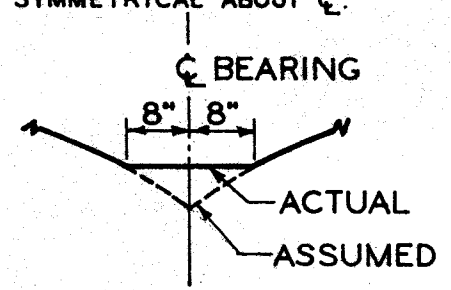

[SEE A.A.S.H.O. 1.5.2(10)]

$\frac{41}{29^2} = .0487515 = K_{02}$ (SPAN 1)
K_{01} (SPAN 4)

$\frac{41}{37.8333^2} = .0286441 = K_{01}$ (SPANS 2 & 3)

CONTINUOUS BEAM ANALYSIS

STATE HIGHWAY DEPARTMENT OF GEORGIA
BRIDGE DIVISION

1-4-71

DESIGN DATA

IDENTIFICATION

ENTER "CONT" IF ADDITIONAL CARD OF REMARKS IS USED.

	PGM.	PROB. NO.	REMARKS, PROJECT NUMBER, DATE, COUNTY, NAME, ETC.	7 7	8 0
*	B.O.I	EX. 4	EXAMPLE NO. 4 57-77-77-57 CONTINUOUS REINFORCED CONCRETE T-BEAM		
*					

BEAM CONSTANTS

"I" = NON-COMP. BM.
"O" = COMP. BM.

	BEAM IDENTITY	Ns	℄ CLASS	TYPE	WDLnc	WDLc	Wsw	WG	E	BM. SPAC.	Σ Zr
1	EXAMPLE NO. 4	4	HS 20	1 1	.290			150.0	1.50	84.167	

"I" = CONC. BM.
"O" = STEEL BM.

"I" = EXT. BM.
"O" = INT. BM.

OPTIONAL BEAM CONSTANTS

	D^F_M	D^F_{Ve}	D^F_D	n = Es/Ec 1n	3n	℄ SKIP T	L	M	NO. ℄ CYCLES	Fy	Fu	Fc	Fs
2			1.0000	8								1.350	24.000

Fy & Fu NOT REQUIRED WITH CONCRETE BEAM.
Fc & Fs NOT REQUIRED WITH STEEL BEAM.

BEAM CONSTANTS

BEAM IDENTITY – BEAM NAME, i.e., Bm. A LT.

Ns – NUMBER OF SPANS ($2 \leq Ns \leq 8$).

℄ CLASS – A.A.S.H.O. ℄ DESIGNATION, HS 20, H15, etc.

W_{DLnc} – UNIFORM NON-COMPOSITE DEAD LOAD, kips/ft.

W_{DLc} – UNIFORM COMPOSITE DEAD LOAD, kips/ft.

Wsw – UNIFORM SIDEWALK LIVE LOAD, kips/ft.

W_G – UNIT WEIGHT OF BEAM MATERIAL, lbs./ft.^{3}

E – MODULUS OF ELASTICITY OF BEAM MATERIAL, million lbs./in.^{2}

BM. SPAC. – BEAM SPACING, ft.

Σ Zr – SHEAR CONNECTOR CAPACITY, ONE TRANSVERSE ROW, kips.

DO NOT INCLUDE BEAM WEIGHT IN W_{DLnc}.

OPTIONAL BEAM CONSTANTS

D^F_M – DISTRIBUTION FACTOR FOR MOMENT, SHEAR.

D^F_{Ve} – DISTRIBUTION FACTOR FOR END SHEAR.

D^F_D – DISTRIBUTION FACTOR FOR ℄ DEFLECTIONS.

n – MODULAR RATIO SHORT (1n) AND LONG (3n) TERM VALUES. (10 and 30 assumed if not given)

℄ SKIP – ENTER DIGIT "1" TO SKIP TRUCK (T), LANE (L), OR MILITARY (M) LIVE LOAD.

	VALUES ASSUMED IF NOT GIVEN
NO. ℄ CYCLES – NUMBER CYCLES MAXIMUM STRESS.	500,000
Fy – MIN. YIELD STRENGTH BEAM MATERIAL, kips/in.^{2}	36.0
Fu – MIN. TENSILE STRENGTH BEAM MATERIAL, kips/in.^{2}	58.0
Fc – ALLOWABLE CONCRETE FLEXURE STRESS, kips/in.^{2}	1.200
Fs – ALLOWABLE REINFORCING STEEL STRESS, kips/in.^{2}	20.0

CONTINUOUS BEAM ANALYSIS

SPAN 1 OF 4

SPAN DATA

SHEET 2 OF 5

1-4-71

STATE HIGHWAY DEPARTMENT OF GEORGIA
BRIDGE DIVISION

SPAN CARD

	M	S (REPEAT SPAN "S")	L ft.	Bm.	T.R.s	B.R.s	CS	PN	PC	WPN	WPC	WF	N	G
3	1		57.250	2	1			1						1

(NUMBER OF RANGES: Bm. through WPC; BEAM TYPE: WF, N, G)

M = SPAN NUMBER. IF SPAN "M" (always give) IS IDENTICAL (symm.) TO SOME PREVIOUSLY DEFINED SPAN "S", ENTER SPAN NO. "S" UNDER S. NO FURTHER INPUT
L = SPAN LENGTH. REQUIRED FOR SPAN "M".

INDICATE BEAM TYPE WITH DIGIT ONE, 1.

BEAM TYPE:		LOAD CARDS REQUIRED
WF	WIDE FLANGE ROLLED BEAM	400, 401
N	NON-STANDARD BEAM	400, 411, 412, 413
G	GIRDER (Conc. or Steel)	400, 421, 422, 423, 424, 425

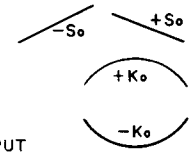

LOAD CARDS

		CODE	RANGE 1	RANGE 2	RANGE 3	RANGE 4	RANGE 5	RANGE 6	RANGE 7	RANGE 8	RANGE 9	RANGE 10	
BEAM OR WEB	RANGE	4,0,0	27.583	57.250									ft.
BEAM OR WEB	WF Bm.	4,0,1	W X	W X	W X	W X	W X	W X	W X	W X	W X	W X	in. & lbs.
BEAM OR WEB	NON-STD BM/WEB D	4,1,1											in.
BEAM OR WEB	NON-STD BM/WEB A	4,1,2											in.²
BEAM OR WEB	NON-STD BM/WEB I	4,1,3											in.⁴
BEAM OR WEB	GIRDER WEB STEEL So	4,2,1	0 0	0 0									in./ft.
BEAM OR WEB	GIRDER WEB STEEL Ko	4,2,2	0 0	.948752									in./ft.²
BEAM OR WEB	GIRDER CONC. OR STEEL Do	4,2,3	32.0 0	32.0 0									in.
BEAM OR WEB	GIRDER CONC. OR STEEL T	4,2,4	22.0 0	22.0 0									in.
BEAM OR WEB	GIRDER CONC. OR STEEL Xo	4,2,5	0 0	27.583									ft.
TOP PLATES	R	4,3,1	57.250										ft.
TOP PLATES	W	4,3,2	10.1000										in.
TOP PLATES	T	4,3,3	7.000										in.
BOTTOM PLATES	R	4,4,1											ft.
BOTTOM PLATES	W	4,4,2											in.
BOTTOM PLATES	T	4,4,3											in.
COMPOSITE SLAB	R	4,5,1											ft.
COMPOSITE SLAB	W	4,5,2											in.
COMPOSITE SLAB	T	4,5,3											in.
COMPOSITE SLAB	e	4,5,4											in.
COMPOSITE SLAB	As	4,5,5											in.²
NON-COMP. P-LOADS	X	4,6,1	37.250										ft.
NON-COMP. P-LOADS	X	0,0,0											ft.
NON-COMP. P-LOADS	P	4,6,2	2.740										kips
NON-COMP. P-LOADS	P	0,0,0											kips
COMP. P-LDS.	X	4,7,1											ft.
COMP. P-LDS.	P	4,7,2											kips
NON-COMP. Wp	X	4,8,1											ft.
NON-COMP. Wp	W	4,8,2											kips/ft.
COMP. Wp	X	4,9,1											ft.
COMP. Wp	W	4,9,2											kips/ft.

CONTINUOUS BEAM ANALYSIS

SPAN 2 OF 4.

SPAN DATA

SHEET 3 OF 5.

1-4-71

STATE HIGHWAY DEPARTMENT OF GEORGIA
BRIDGE DIVISION

SPAN CARD

M	S (REPEAT SPAN "S")	L ft.	Bm.	T.Rs	B.Rs	CS	PN	PC	WPN	WPC	WF	N	G
3	2	77.0	1	1			2						1

M = SPAN NUMBER. IF SPAN "M" (always give) IS IDENTICAL (symm.) TO SOME PREVIOUSLY DEFINED SPAN "S", ENTER SPAN NO. "S" UNDER S. NO FURTHER INPUT
L = SPAN LENGTH. REQUIRED FOR SPAN "M".

INDICATE BEAM TYPE WITH DIGIT ONE, 1.

BEAM TYPE:		LOAD CARDS REQUIRED
WF	WIDE FLANGE ROLLED BEAM	400, 401
N	NON-STANDARD BEAM	400, 411, 412, 413
G	GIRDER (Conc. or Steel)	400, 421, 422, 423, 424, 425

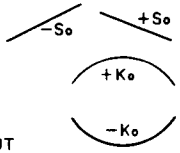

LOAD CARDS

		CODE	RANGE 1	RANGE 2	RANGE 3	RANGE 4	RANGE 5	RANGE 6	RANGE 7	RANGE 8	RANGE 9	RANGE 10	
BEAM OR WEB	RANGE	4,0,0	77.0										ft.
BEAM OR WEB	WF Bm	4,0,1	W X	W X	W X	W X	W X	W X	W X	W X	W X	W X	in. & lbs.
BEAM OR WEB, NON-STD BM/WEB	D	4,1,1											in.
BEAM OR WEB, NON-STD BM/WEB	A	4,1,2											in.^{2}
BEAM OR WEB, NON-STD BM/WEB	I	4,1,3											in.^{4}
BEAM OR WEB, GIRDER WEB STEEL	So	4,2,1	0										in./ft.
BEAM OR WEB, GIRDER WEB STEEL	Ko	4,2,2	.028644										in./ft.^{2}
BEAM OR WEB, GIRDER CONC. OR STEEL	Do	4,2,3	32.0										in.
BEAM OR WEB, GIRDER CONC. OR STEEL	T	4,2,4	22.0										in.
BEAM OR WEB, GIRDER CONC. OR STEEL	Xo	4,2,5	385.0										ft.
TOP PLATES	R	4,3,1	77.0										ft.
TOP PLATES	W	4,3,2	101.0										in.
TOP PLATES	T	4,3,3	7.0										in.
BOTTOM PLATES	R	4,4,1											ft.
BOTTOM PLATES	W	4,4,2											in.
BOTTOM PLATES	T	4,4,3											in.
COMPOSITE SLAB	R	4,5,1											ft.
COMPOSITE SLAB	W	4,5,2											in.
COMPOSITE SLAB	T	4,5,3											in.
COMPOSITE SLAB	e	4,5,4											in.
COMPOSITE SLAB	As	4,5,5											in.^{2}
NON-COMP. P-LOADS	X	4,6,1	20.0	57.0									ft.
NON-COMP. P-LOADS	X	0,0,0											ft.
NON-COMP. P-LOADS	P	4,6,2	27.4	27.4									kips
NON-COMP. P-LOADS	P	0,0,0											kips
NON-COMP. P-LDS.	X	4,7,1											ft.
NON-COMP. P-LDS.	P	4,7,2											kips
NON-COMP. Wp	X	4,8,1											ft.
NON-COMP. Wp	W	4,8,2											kips/ft.
COMP. Wp	X	4,9,1											ft.
COMP. Wp	W	4,9,2											kips/ft.

CONTINUOUS BEAM ANALYSIS

SPAN 3 OF 4

SPAN DATA

SHEET 4 OF 5

1-4-71

STATE HIGHWAY DEPARTMENT OF GEORGIA
BRIDGE DIVISION

SPAN CARD

1 M	S	4 L ft.	10 NUMBER OF RANGES Bm.	T.R.s	B.R.s	CS	PN	PC	WPN	WPC	25 BEAM TYPE WF	N	G
3	3	2											

REPEAT SPAN "S"

M = SPAN NUMBER. IF SPAN "M" (always give) IS IDENTICAL (symm.) TO SOME PREVIOUSLY DEFINED SPAN "S", ENTER SPAN NO. "S" UNDER S. NO FURTHER INPUT
L = SPAN LENGTH. REQUIRED FOR SPAN "M".

INDICATE BEAM TYPE WITH DIGIT ONE, 1. LOAD CARDS REQUIRED
BEAM TYPE: WF - WIDE FLANGE ROLLED BEAM - 400, 401
N - NON-STANDARD BEAM - 400, 411, 412, 413
G - GIRDER (Conc. or Steel) - 400, 421, 422, 423, 424, 425

$-S_o$ $+S_o$ $+K_o$ $-K_o$

LOAD CARDS

		CODE	4 RANGE 1	1 RANGE 2	8 RANGE 3	25 RANGE 4	32 RANGE 5	39 RANGE 6	46 RANGE 7	53 RANGE 8	60 RANGE 9	67 RANGE 10	74
BEAM OR WEB	RANGE	4,0,0											ft.
BEAM OR WEB	WF Bm.	4,0,1	W X	W X	W X	W X	W X	W X	W X	W X	W X	W X	in. & lbs.
BEAM OR WEB, NON-STD. BM/WEB	D	4,1,1											in.
BEAM OR WEB, NON-STD. BM/WEB	A	4,1,2											in.^{2}
BEAM OR WEB, NON-STD. BM/WEB	I	4,1,3											in.^{4}
BEAM OR WEB, GIRDER WEB CONC. OR STEEL	S_o	4,2,1											in./ft.
BEAM OR WEB, GIRDER WEB CONC. OR STEEL	K_o	4,2,2											in./ft.^{2}
BEAM OR WEB, GIRDER WEB CONC. OR STEEL	D_o	4,2,3											in.
BEAM OR WEB, GIRDER WEB CONC. OR STEEL	T	4,2,4											in.
BEAM OR WEB, GIRDER WEB CONC. OR STEEL	X_o	4,2,5											ft.
TOP PLATES	R	4,3,1											ft.
TOP PLATES	W	4,3,2											in.
TOP PLATES	T	4,3,3											in.
BOTTOM PLATES	R	4,4,1											ft.
BOTTOM PLATES	W	4,4,2											in.
BOTTOM PLATES	T	4,4,3											in.
COMPOSITE SLAB	R	4,5,1											ft.
COMPOSITE SLAB	W	4,5,2											in.
COMPOSITE SLAB	T	4,5,3											in.
COMPOSITE SLAB	e	4,5,4											in.
COMPOSITE SLAB	As	4,5,5											in.^{2}
NON-COMP. P-LOADS	X	4,6,1											ft.
NON-COMP. P-LOADS	X	0,0,0											ft.
NON-COMP. P-LOADS	P	4,6,2											kips
NON-COMP. P-LOADS	P	0,0,0											kips
COMP. P-LDS.	X	4,7,1											ft.
COMP. P-LDS.	P	4,7,2											kips
NON-COMP. Wp	X	4,8,1											ft.
NON-COMP. Wp	W	4,8,2											kips/ft.
COMP. Wp	X	4,9,1											ft.
COMP. Wp	W	4,9,2											kips/ft.

State Highway Department of Georgia

CONTINUOUS BEAM ANALYSIS

SPAN 4 OF 4.

SPAN DATA

SHEET 5 OF 5.

1-4-71

STATE HIGHWAY DEPARTMENT OF GEORGIA
BRIDGE DIVISION

SPAN CARD

M	S (REPEAT SPAN "S")	L ft.	Bm.	T.R.s	B.R.s	CS	PN	PC	WPN	WPC	WF	N	G
3	4	2											

NUMBER OF RANGES (1–10) | BEAM TYPE (25)

M = SPAN NUMBER. IF SPAN "M" (always give) IS IDENTICAL (symm.) TO SOME PREVIOUSLY DEFINED SPAN "S", ENTER SPAN NO. "S" UNDER S. NO FURTHER INPUT
L = SPAN LENGTH. REQUIRED FOR SPAN "M".

INDICATE BEAM TYPE WITH DIGIT ONE, 1.

BEAM TYPE:		LOAD CARDS REQUIRED
WF	WIDE FLANGE ROLLED BEAM	400, 401
N	NON-STANDARD BEAM	400, 411, 412, 413
G	GIRDER (Conc. or Steel)	400, 421, 422, 423, 424, 425

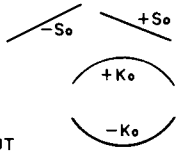

LOAD CARDS

		CODE	RANGE 1	RANGE 2	RANGE 3	RANGE 4	RANGE 5	RANGE 6	RANGE 7	RANGE 8	RANGE 9	RANGE 10	
	RANGE	4,0,0											ft.
	WF Bm.	4,0,1	W X	W X	W X	W X	W X	W X	W X	W X	W X	W X	in. & lbs.
BEAM OR WEB — NON-STD. BM/WEB	D	4,1,1											in.
	A	4,1,2											in.²
	I	4,1,3											in.⁴
BEAM OR WEB — GIRDER WEB CONC. OR STEEL	So	4,2,1											in./ft.
	Ko	4,2,2											in./ft.²
	Do	4,2,3											in.
	T	4,2,4											in.
	Xo	4,2,5											ft.
TOP PLATES	R	4,3,1											ft.
	W	4,3,2											in.
	T	4,3,3											in.
BOTTOM PLATES	R	4,4,1											ft.
	W	4,4,2											in.
	T	4,4,3											in.
COMPOSITE SLAB	R	4,5,1											ft.
	W	4,5,2											in.
	T	4,5,3											in.
	e	4,5,4											in.
	As	4,5,5											in.²
NON-COMP P-LOADS	X	4,6,1											ft.
	X	0,0,0											ft.
	P	4,6,2											kips
	P	0,0,0											kips
COMP P-LDS	X	4,7,1											ft.
	P	4,7,2											kips
NON-COMP Wp	X	4,8,1											ft.
	W	4,8,2											kips/ft.
COMP Wp	X	4,9,1											ft.
	W	4,9,2											kips/ft.

STATE HIGHWAY DEPARTMENT OF GEORGIA

BRIDGE DIVISION

01/19/71 THE ANALYSIS OF CONTINUOUS BEAMS FOR HIGHWAY BRIDGES PROB. NO. EX.4

EXAMPLE NO.4 57-77-77-57 CONTINUOUS REINFORCED CONCRETE T-BEAM

BEAM CONSTANTS

BEAM IDENTITY	NO. OF SPANS	LIVE LOAD CLASS	BEAM TYPE	WDLNC	WDLC	WSW	WG	F	BM.SPAC.	SZR
EXAMPLE NO.4	4	HS20	NONC.CONC.INT.	0.290	0.0	0.0	150.0	1.50	8.4167	0.0

OPTIONAL BEAM CONSTANTS

DFM	DFVE	DFD	N	3N	LIVE LOAD USED	STRESS CYCLES	FY	FU	FC	FS
1.4028	1.4028	1.0000	8	24	TR'K LANE MIL.	0	0.0	0.0	1.350	24.000

SPAN 1 INPUT DATA

M	S	L	* NUMBER OF RANGES								* BEAM SECTION TYPE
			BM	TPL	BPL	CS	PN	PC	PWN	PWC	
1	0	57.250	2	1	0	0	1	0	0	0	GIRD

BEAM SECTION AND LOADS

CODE	RANGE 1	RANGE 2	RANGE 3	RANGE 4	RANGE 5	RANGE 6	RANGE 7	RANGE 8	RANGE 9	RANGE 10
400	27.583	57.250								
421	0.0	0.0								
422	0.0	0.04875								
423	32.000	32.000								
424	22.000	22.000								
425	0.0	27.583								
431	57.250									
432	101.000									
433	7.000									
461	37.250									
462	2.740									

EXAMPLE NO.4 SPAN 2 INPUT DATA

M	S	L	* NUMBER OF RANGES								* BEAM SECTION TYPE
			BM	TPL	BPL	CS	PN	PC	PWN	PWC	
2	0	77.000	1	1	0	0	2	0	0	0	GIRD

BEAM SECTION AND LOADS

CODE	RANGE 1	RANGE 2	RANGE 3	RANGE 4	RANGE 5	RANGE 6	RANGE 7	RANGE 8	RANGE 9	RANGE 10
400	77.000									
421	0.0									
422	0.02864									
423	32.000									
424	22.000									
425	38.500									
431	77.000									
432	101.000									
433	7.000									
461	20.000	57.000								
462	2.740	2.740								

SPAN 3 INPUT DATA SAME AS SPAN 2 INPUT DATA

SPAN 4 INPUT DATA SAME AS SPAN 1 INPUT DATA

EXAMPLE NO.4

BEAM SECTION PROPERTIES AT SPAN TWENTIETH POINTS

		REINFORCED IN TOP ONLY			REINFORCED IN BOTTOM ONLY		
S.PT	D.WEB	JD	AS	RM	JD	AS	RM
1.00	32.00	31.38	6.72	421.8	31.89	27.80	1773.4
1.10	32.00	31.38	6.72	421.8	31.89	27.80	1773.4
1.20	32.00	31.38	6.72	421.8	31.89	27.80	1773.4
1.30	32.00	31.38	6.72	421.8	31.89	27.80	1773.4
1.40	32.00	31.38	6.72	421.8	31.89	27.80	1773.4
1.50	32.05	31.43	6.73	423.1	31.94	27.83	1777.8
1.60	34.23	33.38	7.15	477.3	34.03	28.83	1962.2
1.70	39.61	38.20	8.18	625.1	39.18	31.05	2433.3
1.80	48.18	45.88	9.83	901.9	47.40	34.08	3230.4
1.90	59.95	56.43	12.09	1364.2	58.65	37.62	4412.9
2.00	74.91	69.85	14.96	2089.9	72.89	41.56	6059.4
2.10	59.17	55.74	11.94	1331.0	57.91	37.40	4332.2
2.20	47.28	45.08	9.66	870.6	46.54	33.79	3144.7
2.30	38.79	37.47	8.03	601.4	38.40	30.74	2360.5
2.40	33.70	32.90	7.05	463.7	33.52	28.59	1916.7
2.50	32.00	31.38	6.72	421.8	31.89	27.80	1773.4
2.60	33.70	32.90	7.05	463.7	33.52	28.59	1916.7
2.70	38.79	37.47	8.03	601.4	38.40	30.74	2360.4
2.80	47.28	45.08	9.66	870.6	46.54	33.79	3144.7
2.90	59.17	55.74	11.94	1330.9	57.91	37.40	4332.1
3.00	74.46	69.44	14.87	2065.8	72.46	41.45	6007.4
3.10	59.17	55.74	11.94	1331.0	57.91	37.40	4332.2
3.20	47.28	45.08	9.66	870.6	46.54	33.79	3144.7
3.30	38.79	37.47	8.03	601.4	38.40	30.74	2360.5
3.40	33.70	32.90	7.05	463.7	33.52	28.59	1916.7
3.50	32.00	31.38	6.72	421.8	31.89	27.80	1773.4
3.60	33.70	32.90	7.05	463.7	33.52	28.59	1916.7
3.70	38.79	37.47	8.03	601.4	38.40	30.74	2360.4
3.80	47.28	45.08	9.66	870.6	46.54	33.79	3144.7
3.90	59.17	55.74	11.94	1330.9	57.91	37.40	4332.1
4.00	74.46	69.44	14.87	2065.8	72.46	41.45	6007.4
4.10	59.95	56.43	12.09	1364.3	58.65	37.62	4412.9
4.20	48.18	45.88	9.83	901.9	47.40	34.08	3230.4
4.30	39.61	38.20	8.18	625.1	39.18	31.05	2433.3
4.40	34.23	33.38	7.15	477.3	34.03	28.83	1962.2
4.50	32.05	31.43	6.73	423.1	31.94	27.83	1777.8
4.60	32.00	31.38	6.72	421.8	31.89	27.80	1773.4
4.70	32.00	31.38	6.72	421.8	31.89	27.80	1773.4
4.80	32.00	31.38	6.72	421.8	31.89	27.80	1773.4
4.90	32.00	31.38	6.72	421.8	31.89	27.80	1773.4
5.00	32.00	31.38	6.72	421.8	31.89	27.80	1773.4

		REINFORCED IN TOP ONLY			REINFORCED IN BOTTOM ONLY		
S.PT	D.WEB	JD	AS	RM	JD	AS	RM
1.05	32.00	31.38	6.72	421.8	31.89	27.80	1773.4
1.15	32.00	31.38	6.72	421.8	31.89	27.80	1773.4
1.25	32.00	31.38	6.72	421.8	31.89	27.80	1773.4
1.35	32.00	31.38	6.72	421.8	31.89	27.80	1773.4
1.45	32.00	31.38	6.72	421.8	31.89	27.80	1773.4
1.55	32.74	32.05	6.86	439.9	32.60	28.16	1835.8
1.65	36.52	35.43	7.59	537.8	36.22	29.82	2159.9
1.75	43.49	41.68	8.93	744.3	42.90	32.49	2787.8
1.85	53.66	50.80	10.88	1105.5	52.65	35.80	3769.0
1.95	67.03	62.78	13.45	1688.5	65.40	39.54	5172.4
2.05	66.39	62.21	13.32	1657.9	64.80	39.38	5102.7
2.15	52.80	50.03	10.72	1072.3	51.83	35.54	3683.3
2.25	42.61	40.90	8.76	716.4	42.06	32.17	2706.6
2.35	35.82	34.81	7.45	518.9	35.55	29.52	2099.1
2.45	32.42	31.76	6.80	432.1	32.30	28.01	1809.0
2.55	32.42	31.76	6.80	432.1	32.30	28.01	1809.0
2.65	35.82	34.81	7.45	518.9	35.55	29.52	2099.0
2.75	42.61	40.90	8.76	716.4	42.06	32.17	2706.6
2.85	52.80	50.03	10.72	1072.2	51.82	35.54	3683.2
2.95	66.39	62.21	13.32	1657.9	64.79	39.38	5102.6
3.05	66.39	62.21	13.32	1657.9	64.80	39.38	5102.7
3.15	52.80	50.03	10.72	1072.3	51.83	35.54	3683.3
3.25	42.61	40.90	8.76	716.4	42.06	32.17	2706.6
3.35	35.82	34.81	7.45	518.9	35.55	29.52	2099.1
3.45	32.42	31.76	6.80	432.1	32.30	28.01	1809.0
3.55	32.42	31.76	6.80	432.1	32.30	28.01	1809.0
3.65	35.82	34.81	7.45	518.9	35.55	29.52	2099.0
3.75	42.61	40.90	8.76	716.4	42.06	32.17	2706.6
3.85	52.80	50.03	10.72	1072.2	51.82	35.54	3683.2
3.95	66.39	62.21	13.32	1657.9	64.79	39.38	5102.6
4.05	67.03	62.78	13.45	1688.5	65.40	39.54	5172.5
4.15	53.66	50.80	10.88	1105.5	52.65	35.80	3769.0
4.25	43.49	41.68	8.93	744.3	42.90	32.49	2787.9
4.35	36.52	35.43	7.59	537.8	36.22	29.82	2160.0
4.45	32.74	32.05	6.86	439.9	32.60	28.16	1835.8
4.55	32.00	31.38	6.72	421.8	31.89	27.80	1773.4
4.65	32.00	31.38	6.72	421.8	31.89	27.80	1773.4
4.75	32.00	31.38	6.72	421.8	31.89	27.80	1773.4
4.85	32.00	31.38	6.72	421.8	31.89	27.80	1773.4
4.95	32.00	31.38	6.72	421.8	31.89	27.80	1773.4

SPAN PROPERTIES

SPAN	DL	KL	KLM	CLR	CLRM	CRLM	CRL	KRM	KR	DR
1	1.000000	0.171573	0.135410	0.840418	0.432083	0.0	0.422040	0.220475	0.341657	0.485871
2	0.514129	0.325380	0.233297	0.695917	0.403434	0.395172	0.695925	0.231443	0.325377	0.499997
3	0.500003	0.325380	0.231446	0.695917	0.395171	0.403434	0.695925	0.233294	0.325377	0.514123
4	0.485877	0.341660	0.220476	0.422038	0.0	0.432081	0.840424	0.135410	0.171572	1.000000

EXAMPLE NO.4 MOMENTS(KIP-FEET) AT SPAN TENTH AND MISC. POINTS

	* NON-COMPOSITE DEAD LOADS					* COMPOSITE DEAD LOADS				* LIVE LOADS				* TOTALS	
S.P	BEAM	PN	WDLNC	WPN	TOT.NC *	PC	WDLC	WPC	TOT.C *	SWK.+	SWK.-	LL+I +	LL+I - *	MAX.+	MAX.-
1.1	126.6	1.0	25.2	-0.0	152.8	0.0	0.0	0.0	0.0	0.0	0.0	237.7 T	-52.7 T	390.5	100.1
1.2	205.0	2.0	40.9	-0.0	247.9	0.0	0.0	0.0	0.0	0.0	0.0	384.3 T	-105.4 T	632.1	142.5
1.3	235.2	3.0	47.0	-0.0	285.3	0.0	0.0	0.0	0.0	0.0	0.0	451.3 T	-158.0 T	736.6	127.2
1.4	217.3	4.0	43.7	-0.0	265.0	0.0	0.0	0.0	0.0	0.0	0.0	471.6 T	-210.7 T	736.6	54.3
1.5	151.2	5.0	30.8	-0.0	187.1	0.0	0.0	0.0	0.0	0.0	0.0	441.8 T	-263.4 T	628.9	-76.3
1.6	36.7	6.0	8.5	-0.0	51.3	0.0	0.0	0.0	0.0	0.0	0.0	375.1 T	-316.1 T	426.4	-264.8
1.7	-127.8	-0.7	-23.3	-0.0	-151.9	0.0	0.0	0.0	0.0	0.0	0.0	263.4 T	-368.8 T	111.5	-520.6
1.8	-346.5	-15.4	-64.7	-0.0	-426.6	0.0	0.0	0.0	0.0	0.0	0.0	188.5 L	-421.4 T	-238.0	-848.0
1.9	-625.6	-30.1	-115.6	-0.0	-771.3	0.0	0.0	0.0	0.0	0.0	0.0	195.8 T	-529.6 L	-575.5	-1300.9
2.0	-974.2	-44.7	-175.9	0.0	-1194.9	0.0	0.0	0.0	0.0	0.0	0.0	215.2 T	-721.1 L	-979.7	-1915.9
2.1	-516.1	-24.4	-98.6	-0.0	-639.1	0.0	0.0	0.0	0.0	0.0	0.0	137.8 T	-464.5 L	-501.3	-1103.7
2.2	-182.6	-4.0	-38.5	-0.0	-225.1	0.0	0.0	0.0	0.0	0.0	0.0	233.9 M	-342.8 T	8.8	-567.9
2.3	42.7	7.9	4.4	-0.0	55.0	0.0	0.0	0.0	0.0	0.0	0.0	353.0 T	-275.9 T	408.0	-220.9
2.4	171.2	7.2	30.1	-0.0	208.5	0.0	0.0	0.0	0.0	0.0	0.0	440.9 T	-209.0 T	649.3	-0.6
2.5	209.8	6.5	38.6	-0.0	254.9	0.0	0.0	0.0	0.0	0.0	0.0	468.3 T	-210.1 L	723.2	44.8
2.6	160.8	5.8	29.9	-0.0	196.6	0.0	0.0	0.0	0.0	0.0	0.0	437.1 T	-238.2 T	633.7	-41.6
2.7	22.0	5.1	4.1	-0.0	31.2	0.0	0.0	0.0	0.0	0.0	0.0	345.9 T	-313.4 T	377.0	-282.2
2.8	-213.5	-8.2	-39.0	-0.0	-260.8	0.0	0.0	0.0	0.0	0.0	0.0	229.2 M	-388.6 T	-31.5	-649.4
2.9	-557.4	-30.0	-99.3	-0.0	-686.7	0.0	0.0	0.0	0.0	0.0	0.0	176.5 L	-520.0 L	-510.2	-1206.7
3.0	-1025.8	-51.8	-176.7	0.0	-1254.3	0.0	0.0	0.0	0.0	0.0	0.0	195.3 L	-778.2 L	-1059.0	-2032.6
3.1	-557.4	-30.0	-99.3	-0.0	-686.7	0.0	0.0	0.0	0.0	0.0	0.0	176.5 L	-520.0 L	-510.2	-1206.7
3.2	-213.5	-8.2	-39.0	-0.0	-260.8	0.0	0.0	0.0	0.0	0.0	0.0	229.2 M	-388.6 T	-31.5	-649.4
3.3	22.0	5.1	4.1	-0.0	31.2	0.0	0.0	0.0	0.0	0.0	0.0	345.9 T	-313.4 T	377.1	-282.2
3.4	160.8	5.8	29.9	-0.0	196.6	0.0	0.0	0.0	0.0	0.0	0.0	437.1 T	-238.2 T	633.7	-41.6
3.5	209.8	6.5	38.6	-0.0	254.9	0.0	0.0	0.0	0.0	0.0	0.0	468.3 T	-210.1 L	723.2	44.8
3.6	171.2	7.2	30.1	-0.0	208.5	0.0	0.0	0.0	0.0	0.0	0.0	440.9 T	-209.0 T	649.3	-0.6
3.7	42.7	7.9	4.4	-0.0	55.0	0.0	0.0	0.0	0.0	0.0	0.0	353.0 T	-275.9 T	408.0	-221.0
3.8	-182.6	-4.0	-38.5	-0.0	-225.1	0.0	0.0	0.0	0.0	0.0	0.0	233.9 M	-342.8 T	8.8	-567.9
3.9	-516.2	-24.4	-98.6	-0.0	-639.1	0.0	0.0	0.0	0.0	0.0	0.0	137.8 T	-464.5 L	-501.3	-1103.7
4.0	-974.2	-44.7	-175.9	0.0	-1194.9	0.0	0.0	0.0	0.0	0.0	0.0	215.2 T	-721.1 L	-979.7	-1915.9
4.1	-625.6	-30.1	-115.6	-0.0	-771.3	0.0	0.0	0.0	0.0	0.0	0.0	195.8 T	-529.6 L	-575.4	-1300.9
4.2	-346.5	-15.4	-64.7	-0.0	-426.5	0.0	0.0	0.0	0.0	0.0	0.0	188.5 L	-421.4 T	-238.0	-848.0
4.3	-127.8	-0.7	-23.4	-0.0	-151.9	0.0	0.0	0.0	0.0	0.0	0.0	263.4 T	-368.8 T	111.5	-520.6
4.4	36.7	6.0	8.5	-0.0	51.3	0.0	0.0	0.0	0.0	0.0	0.0	375.1 T	-316.1 T	426.4	-264.8
4.5	151.2	5.0	30.8	-0.0	187.1	0.0	0.0	0.0	0.0	0.0	0.0	441.9 T	-263.4 T	628.9	-76.3
4.6	217.3	4.0	43.7	-0.0	265.0	0.0	0.0	0.0	0.0	0.0	0.0	471.6 T	-210.7 T	736.6	54.3
4.7	235.2	3.0	47.0	-0.0	285.3	0.0	0.0	0.0	0.0	0.0	0.0	451.3 T	-158.0 T	736.6	127.2
4.8	205.0	2.0	40.9	-0.0	247.9	0.0	0.0	0.0	0.0	0.0	0.0	384.3 T	-105.4 T	632.1	142.5
4.9	126.6	1.0	25.2	-0.0	152.8	0.0	0.0	0.0	0.0	0.0	0.0	237.7 T	-52.7 T	390.5	100.1

EXAMPLE NO.4 SHEARS(KIPS) AND SHEAR CONNECTOR SPACINGS(INCHES) AT SPAN TENTH POINTS AND REACTIONS(KIPS)

	DEAD LOADS						*		LIVE LOADS			* MAXIMUM	LL SHEAR	SHEAR
S.PT	BEAM	PN	WN	WPN	TOT.C	TOT.DL *	SWK.+	SWK.-	LL+I +	LL+I -	*	V OR R	RANGE	CON.SP.
1.00	26.319	0.176	5.228	0.0	0.0	31.722	0.0	0.0	49.996 T	-9.492 T		81.718		
1.10	17.904	0.176	3.568	-0.0	0.0	21.648	0.0	0.0	41.810 T	-9.492 T		63.457		
1.20	9.490	0.176	1.908	-0.0	0.0	11.573	0.0	0.0	34.044 T	-12.383 L		45.617		
1.30	1.075	0.176	0.247	-0.0	0.0	1.498	0.0	0.0	26.807 T	-16.708 L		28.305		
1.40	-7.340	0.176	-1.413	-0.0	0.0	-8.577	0.0	0.0	20.195 T	-22.166 T		-30.743		
1.50	-15.755	0.176	-3.073	-0.0	0.0	-18.652	0.0	0.0	14.436 T	-29.500 T		-48.153		
1.60	-24.287	0.176	-4.733	-0.0	0.0	-28.844	0.0	0.0	9.883 M	-37.071 T		-65.916		
1.70	-33.314	-2.564	-6.394	-0.0	0.0	-42.272	0.0	0.0	6.685 L	-43.826 T		-86.098		
1.80	-43.256	-2.564	-8.054	-0.0	0.0	-53.874	0.0	0.0	4.639 L	-49.452 T		-103.326		
1.90	-54.532	-2.564	-9.714	-0.0	0.0	-66.810	0.0	0.0	3.023 L	-54.110 T		-120.920		
2.00	-67.561	-2.564	-11.374	-0.0	0.0	-81.500	0.0	0.0	1.733 L	-58.032 T		-139.532		
R1-2	135.980	5.212	22.529	0.0	0.0	163.721	0.0		73.054 L			236.775		
2.00	68.418	2.648	11.155	0.0	0.0	82.221	0.0	0.0	56.531 T	-10.177 T		138.752		
2.10	51.005	2.648	8.922	-0.0	0.0	62.574	0.0	0.0	51.191 T	-10.177 T		113.766		
2.20	35.988	2.648	6.689	-0.0	0.0	45.325	0.0	0.0	45.052 T	-10.177 T		90.376		
2.30	22.769	-0.092	4.456	-0.0	0.0	27.133	0.0	0.0	38.177 T	-12.467 L		65.310		
2.40	10.750	-0.092	2.223	-0.0	0.0	12.880	0.0	0.0	30.834 T	-16.636 L		43.715		
2.50	-0.671	-0.092	-0.010	-0.0	0.0	-0.773	0.0	0.0	23.340 T	-23.782 T		-24.555		
2.60	-12.091	-0.092	-2.243	-0.0	0.0	-14.426	0.0	0.0	16.474 L	-31.306 T		-45.733		
2.70	-24.110	-0.092	-4.476	-0.0	0.0	-28.679	0.0	0.0	12.365 L	-38.629 T		-67.308		
2.80	-37.329	-2.832	-6.709	-0.0	0.0	-46.870	0.0	0.0	9.089 L	-45.440 T		-92.310		
2.90	-52.345	-2.832	-8.942	-0.0	0.0	-64.119	0.0	0.0	8.961 T	-51.479 T		-115.599		
3.00	-69.759	-2.832	-11.175	-0.0	0.0	-83.766	0.0	0.0	8.961 T	-56.695 T		-140.461		
R2-3	139.517	5.664	22.350	0.0	0.0	167.532	0.0		74.814 L			242.345		
3.00	69.759	2.832	11.175	0.0	0.0	83.766	0.0	0.0	56.695 T	-8.960 T		140.460		
3.10	52.345	2.832	8.942	-0.0	0.0	64.119	0.0	0.0	51.479 T	-8.960 T		115.598		
3.20	37.328	2.832	6.709	-0.0	0.0	46.869	0.0	0.0	45.439 T	-9.089 L		92.309		
3.30	24.110	0.092	4.476	-0.0	0.0	28.678	0.0	0.0	38.629 T	-12.365 L		67.307		
3.40	12.090	0.092	2.243	-0.0	0.0	14.425	0.0	0.0	31.306 T	-16.474 L		45.731		
3.50	0.669	0.092	0.010	-0.0	0.0	0.772	0.0	0.0	23.782 T	-23.340 T		24.553		
3.60	-10.751	0.092	-2.223	-0.0	0.0	-12.882	0.0	0.0	16.636 L	-30.835 T		-43.716		
3.70	-22.770	0.092	-4.456	-0.0	0.0	-27.134	0.0	0.0	12.467 L	-38.177 T		-65.311		
3.80	-35.989	-2.648	-6.689	-0.0	0.0	-45.325	0.0	0.0	10.177 T	-45.052 T		-90.377		
3.90	-51.005	-2.648	-8.922	-0.0	0.0	-62.575	0.0	0.0	10.177 T	-51.192 T		-113.766		
4.00	-68.418	-2.648	-11.155	-0.0	0.0	-82.221	0.0	0.0	10.177 T	-56.531 T		-138.752		
R3-4	135.980	5.212	22.529	0.0	0.0	163.721	0.0		73.055 L			236.776		
4.00	67.562	2.564	11.374	0.0	0.0	81.500	0.0	0.0	58.032 T	-1.733 L		139.532		
4.10	54.532	2.564	9.714	-0.0	0.0	66.810	0.0	0.0	54.110 T	-3.023 L		120.920		
4.20	43.256	2.564	8.054	-0.0	0.0	53.874	0.0	0.0	49.452 T	-4.639 L		103.326		
4.30	33.313	2.564	6.394	-0.0	0.0	42.271	0.0	0.0	43.826 T	-6.685 L		86.098		
4.40	24.286	-0.176	4.733	-0.0	0.0	28.844	0.0	0.0	37.071 T	-9.883 M		65.915		
4.50	15.755	-0.176	3.073	-0.0	0.0	18.652	0.0	0.0	29.500 T	-14.436 T		48.152		
4.60	7.339	-0.176	1.413	-0.0	0.0	8.576	0.0	0.0	22.166 T	-20.195 T		30.743		
4.70	-1.075	-0.176	-0.248	-0.0	0.0	-1.499	0.0	0.0	16.708 L	-26.807 T		-28.305		
4.80	-9.490	-0.176	-1.908	-0.0	0.0	-11.573	0.0	0.0	12.383 L	-34.044 T		-45.617		
4.90	-17.905	-0.176	-3.568	-0.0	0.0	-21.648	0.0	0.0	9.492 T	-41.810 T		-63.458		
5.00	-26.319	-0.176	-5.228	-0.0	0.0	-31.723	0.0	0.0	9.492 T	-49.996 T		-81.719		

SPAN 1 V LANE = 14.963 V 14 FT. = 18.808 SPAN 4 V LANE = 14.963 V 14 FT. = 18.808

EXAMPLE NO.4

DEAD LOAD DEFLECTIONS(INCHES) AT SPAN TWENTIETH POINTS

S.PT	BEAM	PN	WN	WPN	TOT.NC	TOT.C	TOT.DL	S.PT	BEAM	PN	WN	WPN	TOT.NC	TOT.C	TOT.DL
1.05	0.058	0.001	0.012	0.0	0.071	0.0	0.071	1.10	0.112	0.002	0.023	0.0	0.137	0.0	0.137
1.15	0.161	0.003	0.033	0.0	0.196	0.0	0.196	1.20	0.201	0.004	0.041	0.0	0.246	0.0	0.246
1.25	0.232	0.004	0.047	0.0	0.283	0.0	0.283	1.30	0.252	0.005	0.051	0.0	0.308	0.0	0.308
1.35	0.260	0.005	0.053	0.0	0.319	0.0	0.319	1.40	0.258	0.006	0.053	0.0	0.316	0.0	0.316
1.45	0.245	0.006	0.050	0.0	0.301	0.0	0.301	1.50	0.223	0.005	0.046	0.0	0.275	0.0	0.275
1.55	0.194	0.005	0.041	0.0	0.240	0.0	0.240	1.60	0.161	0.004	0.034	0.0	0.199	0.0	0.199
1.65	0.126	0.004	0.027	0.0	0.156	0.0	0.156	1.70	0.092	0.002	0.020	0.0	0.114	0.0	0.114
1.75	0.062	0.001	0.014	0.0	0.077	0.0	0.077	1.80	0.037	0.001	0.009	0.0	0.046	0.0	0.046
1.85	0.018	-0.000	0.005	0.0	0.023	0.0	0.023	1.90	0.006	-0.000	0.002	0.0	0.007	0.0	0.007
1.95	-0.000	-0.000	0.000	0.0	-0.000	0.0	-0.000								
2.05	0.010	0.001	0.001	0.0	0.011	0.0	0.011	2.10	0.030	0.002	0.004	0.0	0.036	0.0	0.036
2.15	0.060	0.004	0.009	0.0	0.073	0.0	0.073	2.20	0.098	0.006	0.015	0.0	0.120	0.0	0.120
2.25	0.143	0.008	0.023	0.0	0.174	0.0	0.174	2.30	0.190	0.010	0.032	0.0	0.232	0.0	0.232
2.35	0.234	0.012	0.040	0.0	0.286	0.0	0.286	2.40	0.271	0.013	0.047	0.0	0.331	0.0	0.331
2.45	0.295	0.014	0.051	0.0	0.360	0.0	0.360	2.50	0.302	0.014	0.053	0.0	0.369	0.0	0.369
2.55	0.291	0.013	0.051	0.0	0.355	0.0	0.355	2.60	0.264	0.012	0.047	0.0	0.323	0.0	0.323
2.65	0.224	0.011	0.040	0.0	0.275	0.0	0.275	2.70	0.178	0.009	0.032	0.0	0.218	0.0	0.218
2.75	0.131	0.007	0.023	0.0	0.160	0.0	0.160	2.80	0.087	0.005	0.015	0.0	0.106	0.0	0.106
2.85	0.050	0.003	0.009	0.0	0.061	0.0	0.061	2.90	0.022	0.001	0.004	0.0	0.027	0.0	0.027
2.95	0.006	0.000	0.001	0.0	0.007	0.0	0.007								
3.05	0.006	0.000	0.001	0.0	0.007	0.0	0.007	3.10	0.022	0.001	0.004	0.0	0.027	0.0	0.027
3.15	0.050	0.003	0.009	0.0	0.061	0.0	0.061	3.20	0.087	0.005	0.015	0.0	0.106	0.0	0.106
3.25	0.131	0.007	0.023	0.0	0.160	0.0	0.160	3.30	0.178	0.009	0.032	0.0	0.218	0.0	0.218
3.35	0.224	0.011	0.040	0.0	0.275	0.0	0.275	3.40	0.264	0.012	0.047	0.0	0.323	0.0	0.323
3.45	0.291	0.013	0.051	0.0	0.355	0.0	0.355	3.50	0.302	0.014	0.053	0.0	0.369	0.0	0.369
3.55	0.295	0.014	0.051	0.0	0.360	0.0	0.360	3.60	0.271	0.013	0.047	0.0	0.331	0.0	0.331
3.65	0.234	0.012	0.040	0.0	0.286	0.0	0.286	3.70	0.190	0.010	0.032	0.0	0.232	0.0	0.232
3.75	0.143	0.008	0.023	0.0	0.174	0.0	0.174	3.80	0.098	0.006	0.015	0.0	0.120	0.0	0.120
3.85	0.060	0.004	0.009	0.0	0.073	0.0	0.073	3.90	0.030	0.002	0.004	0.0	0.036	0.0	0.036
3.95	0.010	0.001	0.001	0.0	0.011	0.0	0.011								
4.05	-0.000	-0.000	0.000	0.0	-0.000	0.0	-0.000	4.10	0.006	-0.000	0.002	0.0	0.007	0.0	0.007
4.15	0.018	-0.000	0.005	0.0	0.023	0.0	0.023	4.20	0.037	0.001	0.009	0.0	0.046	0.0	0.046
4.25	0.062	0.001	0.014	0.0	0.077	0.0	0.077	4.30	0.092	0.002	0.020	0.0	0.114	0.0	0.114
4.35	0.126	0.004	0.027	0.0	0.156	0.0	0.156	4.40	0.161	0.004	0.034	0.0	0.199	0.0	0.199
4.45	0.194	0.005	0.041	0.0	0.240	0.0	0.240	4.50	0.223	0.005	0.046	0.0	0.275	0.0	0.275
4.55	0.245	0.006	0.050	0.0	0.301	0.0	0.301	4.60	0.258	0.006	0.053	0.0	0.316	0.0	0.316
4.65	0.260	0.005	0.053	0.0	0.319	0.0	0.319	4.70	0.252	0.005	0.051	0.0	0.308	0.0	0.308
4.75	0.232	0.004	0.047	0.0	0.283	0.0	0.283	4.80	0.201	0.004	0.041	0.0	0.246	0.0	0.246
4.85	0.161	0.003	0.033	0.0	0.196	0.0	0.196	4.90	0.112	0.002	0.023	0.0	0.137	0.0	0.137
4.95	0.058	0.001	0.012	0.0	0.071	0.0	0.071								

LIVE LOAD DEFLECTIONS(INCHES)

SPAN	AT	LANE	TRUCK	MIL.	SIDEWALK	L/800
1	0.450 L	0.387	0.497	0.393	0.0	0.859
2	0.500 L	0.541	0.687	0.520	0.0	1.155
3	0.500 L	0.541	0.687	0.520	0.0	1.155
4	0.550 L	0.387	0.497	0.393	0.0	0.859

EXAMPLE NO. 4: COMMENTS

Example four is a continuous reinforced concrete T-beam of variable depth. The stem is entered as a girder web and the T slab is entered as a top plate. That portion of the slab that acts as part of the beam is not included in the uniform dead load (WDLnc). Note that the type of beam is defined as non-composite, concrete, and interior. The data ($\sum Zr$, WDLc, Fu, Fy, No. Live Load Cycles) are not required with a concrete beam.

The concrete stress (1.350), steel stress (24.0), and modular ratio (8) are different from normal values, and therefore, must be given in the input data.

An inspection of the output indicates that the depth of beam is almost ideal over the interior supports, a resisting moment of 2065.8 compared to a maximum moment of 2032.6 at support 3. In the positive moment areas, the area of reinforcing steel can be reduced since a balanced design is unfeasible and not required.

EXAMPLE NO. 5: 82-104-82 COMPOSITE CONTINUOUS UNIT (WF WITH C. PL'S.)

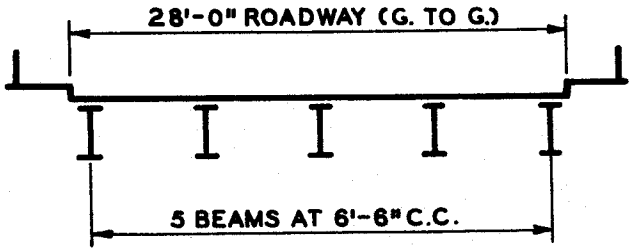

BRIDGE CROSS SECTION

LIVE LOAD = HS 20 and Military
A36 steel
n = 10
500,000 stress cycles

INVESTIGATE FIRST INTERIOR BEAM

GIVEN: $W_{DL_{NC}} = 555^{LB./FT.}$, $W_{DL_C} = 300^{LB./FT.}$

$D^F_{Ve} = D^F_M$

$D^F_D = 0.80$

W_{SW} = NONE

$W_G = 490.0\ ^{LB./FT.^3}$

$E = 29.00 \times 10^{6\,LB./IN.^2}$

$\Sigma Z_r = 10.6\,(.75)^2\,(4) = 23.85^k$

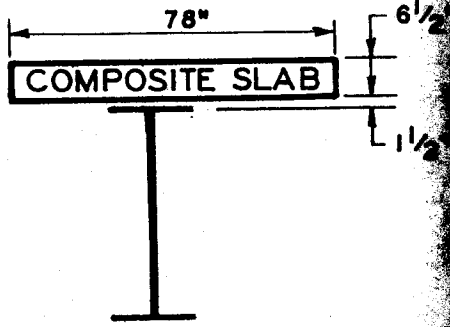

COMPOSITE BEAM CROSS SECTION

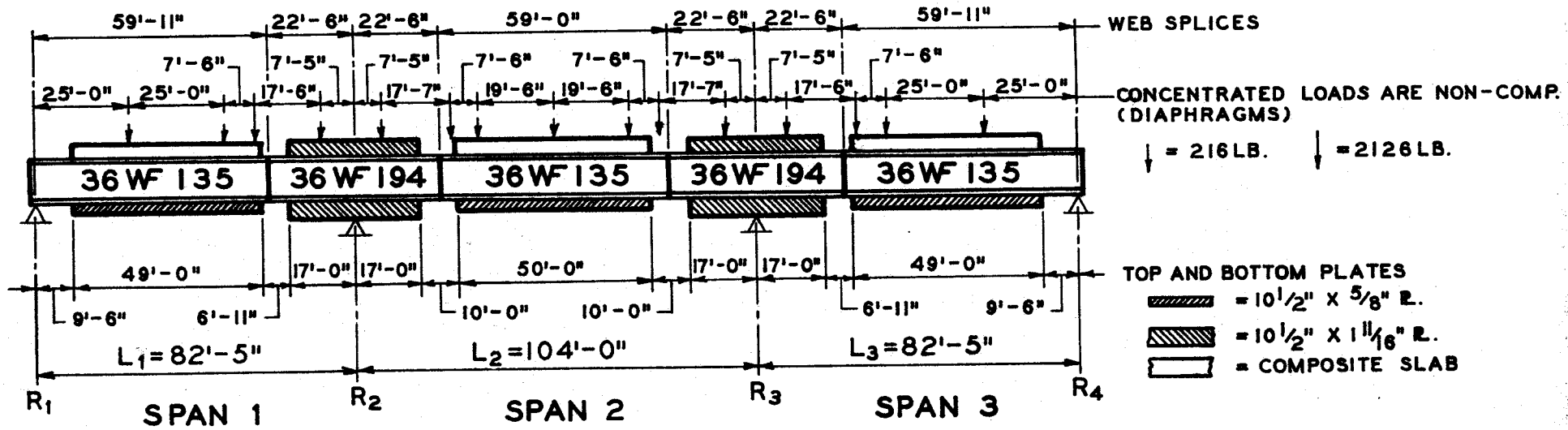

NOTE: EXAMPLE 5 IS THE SAME AS EXAMPLE 3 EXCEPT BEAM SIZE, TOP PL'S., AND COMPOSITE SLAB IN POSITIVE MOMENT REGION.

CONTINUOUS BEAM ANALYSIS

STATE HIGHWAY DEPARTMENT OF GEORGIA
BRIDGE DIVISION

1-4-71

DESIGN DATA

IDENTIFICATION

ENTER "CONT" IF ADDITIONAL CARD OF REMARKS IS USED.

PGM.	PROB.NO.	REMARKS, PROJECT NUMBER, DATE, COUNTY, NAME, ETC.
B.O.I	EX.5	EXAMPLE NO.5 , 82-104-82 COMPOSITE CONTINUOUS UNIT, WF WITH COVER PLATES

BEAM CONSTANTS

"I" = NON-COMP. BM.
"O" = COMP. BM.

BEAM IDENTITY	Ns	℄ CLASS	TYPE	WDLnc	WDLc	Wsw	WG	E	BM. SPAC.	Σ Zr
EXAMPLE NO.5	3	HS20	000	.555	.300	.	490	29.0	6.500	23.850

"I" = CONC. BM.
"O" = STEEL BM.

"I" = EXT. BM.
"O" = INT. BM.

OPTIONAL BEAM CONSTANTS

D^F_M	D^F_{Ve}	D^F_D	n = Es/Ec 1n	3n	℄ SKIP T	L	M	NO. ℄ CYCLES	Fy	Fu	Fc	Fs
.	.	0.8000						,	.	.	.	.

Fy & Fu NOT REQUIRED WITH CONCRETE BEAM.
Fc & Fs NOT REQUIRED WITH STEEL BEAM.

BEAM CONSTANTS

BEAM IDENTITY - BEAM NAME, i.e., Bm. A LT.

Ns - NUMBER OF SPANS ($2 \leq Ns \leq 8$).

℄ CLASS - A.A.S.H.O. ℄ DESIGNATION, HS 20, H15, etc.

W_{DLnc} - UNIFORM NON-COMPOSITE DEAD LOAD, kips/ft.

W_{DLc} - UNIFORM COMPOSITE DEAD LOAD, kips/ft.

Wsw - UNIFORM SIDEWALK LIVE LOAD, kips/ft.

W_G - UNIT WEIGHT OF BEAM MATERIAL, lbs./ft.^{3}

E - MODULUS OF ELASTICITY OF BEAM MATERIAL, million lbs./in.^{2}

BM. SPAC. - BEAM SPACING, ft.

Σ Zr - SHEAR CONNECTOR CAPACITY, ONE TRANSVERSE ROW, kips.

DO NOT INCLUDE BEAM WEIGHT IN W_{DLnc}.

OPTIONAL BEAM CONSTANTS

D^F_M - DISTRIBUTION FACTOR FOR MOMENT, SHEAR.

D^F_{Ve} - DISTRIBUTION FACTOR FOR END SHEAR.

D^F_D - DISTRIBUTION FACTOR FOR ℄ DEFLECTIONS.

n - MODULAR RATIO SHORT (1n) AND LONG (3n) TERM VALUES. (10 and 30 assumed if not given)

℄ SKIP - ENTER DIGIT "1" TO SKIP TRUCK (T), LANE (L), OR MILITARY (M) LIVE LOAD.

	VALUES ASSUMED IF NOT GIVEN
NO. ℄ CYCLES - NUMBER CYCLES MAXIMUM STRESS.	500,000
Fy - MIN. YIELD STRENGTH BEAM MATERIAL, kips/in.^{2}	36.0
Fu - MIN. TENSILE STRENGTH BEAM MATERIAL, kips/in.^{2}	58.0
Fc - ALLOWABLE CONCRETE FLEXURE STRESS, kips/in.^{2}	1.200
Fs - ALLOWABLE REINFORCING STEEL STRESS, kips/in.^{2}	20.0

CONTINUOUS BEAM ANALYSIS

SPAN 1 OF 3.

SPAN DATA

SHEET 2 OF 4.

1-4-71

STATE HIGHWAY DEPARTMENT OF GEORGIA
BRIDGE DIVISION

SPAN CARD

	M	S (REPEAT SPAN "S")	L ft.	Bm.	T.R.s	B.R.s	CS	PN	PC	WPN	WPC	BEAM TYPE WF	N	G
3	1		824.17	2	2	4	3	4				1		

M = SPAN NUMBER. IF SPAN "M" (always give) IS IDENTICAL (symm.) TO SOME PREVIOUSLY DEFINED SPAN "S", ENTER SPAN NO. "S" UNDER S. NO FURTHER INPUT
L = SPAN LENGTH. REQUIRED FOR SPAN "M".

INDICATE BEAM TYPE WITH DIGIT ONE, 1.

BEAM TYPE:		LOAD CARDS REQUIRED
WF	WIDE FLANGE ROLLED BEAM	400, 401
N	NON-STANDARD BEAM	400, 411, 412, 413
G	GIRDER (Conc. or Steel)	400, 421, 422, 423, 424, 425

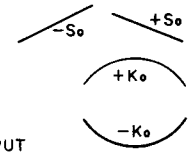

LOAD CARDS

		CODE	RANGE 1	RANGE 2	RANGE 3	RANGE 4	RANGE 5	RANGE 6	RANGE 7	RANGE 8	RANGE 9	RANGE 10	
BEAM OR WEB	RANGE	4,0,0	599.17	824.17									ft.
BEAM OR WEB	WF Bm	4,0,1	W 36 X 135	W 36 X 194	W X	W X	W X	W X	W X	W X	W X	W X	in. & lbs.
BEAM OR WEB, NON-STD BM/WEB	D	4,1,1											in.
BEAM OR WEB, NON-STD BM/WEB	A	4,1,2											in.²
BEAM OR WEB, NON-STD BM/WEB	I	4,1,3											in.⁴
BEAM OR WEB, GIRDER WEB CONC. OR STEEL	So	4,2,1											in./ft.
BEAM OR WEB, GIRDER WEB CONC. OR STEEL	Ko	4,2,2											in./ft.²
BEAM OR WEB, GIRDER WEB CONC. OR STEEL	Do	4,2,3											in.
BEAM OR WEB, GIRDER WEB CONC. OR STEEL	T	4,2,4											in.
BEAM OR WEB, GIRDER WEB CONC. OR STEEL	Xo	4,2,5											ft.
TOP PLATES	R	4,3,1	654.17	824.17									ft.
TOP PLATES	W	4,3,2	0 0	1.0500									in.
TOP PLATES	T	4,3,3	0 0	1.688									in.
BOTTOM PLATES	R	4,4,1	9.500	58.500	654.17	824.17							ft.
BOTTOM PLATES	W	4,4,2	0 0	1.0500	0 0	1.0500							in.
BOTTOM PLATES	T	4,4,3	0 0	.625	0 0	1.688							in.
COMPOSITE SLAB	R	4,5,1	9.500	58.500	824.17								ft.
COMPOSITE SLAB	W	4,5,2	0 0	7.8000	0 0								in.
COMPOSITE SLAB	T	4,5,3	0 0	.650	0 0								in.
COMPOSITE SLAB	e	4,5,4	0 0	1.500	0 0								in.
COMPOSITE SLAB	As	4,5,5	0 0	0 0	0 0								in.²
NON-COMP. P-LOADS	X	4,6,1	250 0	50 0	57.50 0	75.00							ft.
NON-COMP. P-LOADS	X	0,0,0											ft.
NON-COMP. P-LOADS	P	4,6,2	21.6	21.6	21.26	21.6							kips
NON-COMP. P-LOADS	P	0,0,0											kips
NON-COMP. Wp P-LDS.	X	4,7,1											ft.
NON-COMP. Wp P-LDS.	P	4,7,2											kips
NON-COMP. Wp	X	4,8,1											ft.
NON-COMP. Wp	W	4,8,2											kips/ft.
COMP. Wp	X	4,9,1											ft.
COMP. Wp	W	4,9,2											kips/ft.

CONTINUOUS BEAM ANALYSIS

SPAN 2 OF 3.

SPAN DATA

SHEET 3 OF 4.

1-4-71

STATE HIGHWAY DEPARTMENT OF GEORGIA
BRIDGE DIVISION

SPAN CARD

	M	S	L ft.	Bm.	T.R.s	B.R.s	CS	PN	PC	WPN	WPC	WF	N	G
		REPEAT SPAN "S"		NUMBER OF RANGES								BEAM TYPE		
1	3	2	104.0 0	3	3	5	3	7				1		

M = SPAN NUMBER. IF SPAN "M" (always give) IS IDENTICAL (symm.) TO SOME PREVIOUSLY DEFINED SPAN "S", ENTER SPAN NO. "S" UNDER S. NO FURTHER INPUT
L = SPAN LENGTH. REQUIRED FOR SPAN "M".

INDICATE BEAM TYPE WITH DIGIT ONE, 1.

BEAM TYPE:		LOAD CARDS REQUIRED
WF	WIDE FLANGE ROLLED BEAM	400, 401
N	NON-STANDARD BEAM	400, 411, 412, 413
G	GIRDER (Conc. or Steel)	400, 421, 422, 423, 424, 425

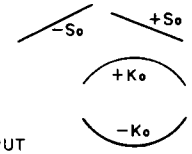

LOAD CARDS

		CODE	RANGE 1	RANGE 2	RANGE 3	RANGE 4	RANGE 5	RANGE 6	RANGE 7	RANGE 8	RANGE 9	RANGE 10	
BEAM OR WEB	RANGE	4,0,0	22500	81500	104000								ft.
	WF Bm.	4,0,1	W 36 X 194	W 36 X 135	W 36 X 194	W X	W X	W X	W X	W X	W X	W X	in. & lbs.
	NON-STD. BM/WEB D	4,1,1											in.
	A	4,1,2											in.²
	I	4,1,3											in.⁴
	GIRDER WEB CONC. OR STEEL So	4,2,1											in./ft.
	Ko	4,2,2											in./ft.²
	Do	4,2,3											in.
	T	4,2,4											in.
	Xo	4,2,5											ft.
TOP PLATES	R	4,3,1	170 0	870 0	1040 0								ft.
	W	4,3,2	10500	0 0	10500								in.
	T	4,3,3	1688	0 0	1688								in.
BOTTOM PLATES	R	4,4,1	170 0	270 0	770 0	870 0	104000						ft.
	W	4,4,2	10500	0 0	10500	0 0	10500						in.
	T	4,4,3	1688	0 0	625	0 0	1688						in.
COMPOSITE SLAB	R	4,5,1	270 0	770 0	1040 0								ft.
	W	4,5,2	0 0	780 0	0 0								in.
	T	4,5,3	0 0	6500	0 0								in.
	e	4,5,4	0 0	1500	0 0								in.
	As	4,5,5	0 0	0 0	0 0								in.²
NON-COMP. P-LOADS	X	4,6,1	7417	250 0	3250 0	520 0	71500	79000	96583				ft.
	X	0,0,0											ft.
	P	4,6,2	216	2126	216	216	216	2126	216				kips
	P	0,0,0											kips
COMP. P-LDS.	X	4,7,1											ft.
	P	4,7,2											kips
NON-COMP. Wp	X	4,8,1											ft.
	W	4,8,2											kips/ft.
COMP. Wp	X	4,9,1											ft.
	W	4,9,2											kips/ft.

CONTINUOUS BEAM ANALYSIS

SPAN 3 OF 3.

SPAN DATA

SHEET 4 OF 4.

1-4-71

STATE HIGHWAY DEPARTMENT OF GEORGIA
BRIDGE DIVISION

SPAN CARD

M	S (REPEAT SPAN "S")	L ft.	Bm.	T.R.s	B.R.s	CS	PN	PC	WPN	WPC	WF	N	G
3	3												

NUMBER OF RANGES (1–10) · BEAM TYPE (25)

M = SPAN NUMBER. IF SPAN "M" (always give) IS IDENTICAL (symm.) TO SOME PREVIOUSLY DEFINED SPAN "S", ENTER SPAN NO. "S" UNDER S. NO FURTHER INPUT
L = SPAN LENGTH. REQUIRED FOR SPAN "M".

INDICATE BEAM TYPE WITH DIGIT ONE, 1. LOAD CARDS REQUIRED
BEAM TYPE: WF – WIDE FLANGE ROLLED BEAM – 400, 401
N – NON-STANDARD BEAM – 400, 411, 412, 413
G – GIRDER (Conc. or Steel) – 400, 421, 422, 423, 424, 425

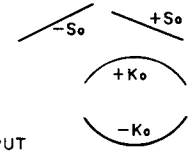

LOAD CARDS

		CODE	RANGE 1	RANGE 2	RANGE 3	RANGE 4	RANGE 5	RANGE 6	RANGE 7	RANGE 8	RANGE 9	RANGE 10	
BEAM OR WEB	RANGE	4,0,0											ft.
BEAM OR WEB	WF Bm	4,0,1	W X	W X	W X	W X	W X	W X	W X	W X	W X	W X	in. & lbs.
BEAM OR WEB – NON-STD. BM./WEB	D	4,1,1											in.
BEAM OR WEB – NON-STD. BM./WEB	A	4,1,2											in.²
BEAM OR WEB – NON-STD. BM./WEB	I	4,1,3											in.⁴
BEAM OR WEB – GIRDER WEB CONC. OR STEEL	So	4,2,1											in./ft.
BEAM OR WEB – GIRDER WEB CONC. OR STEEL	Ko	4,2,2											in./ft.²
BEAM OR WEB – GIRDER WEB CONC. OR STEEL	Do	4,2,3											in.
BEAM OR WEB – GIRDER WEB CONC. OR STEEL	T	4,2,4											in.
BEAM OR WEB – GIRDER WEB CONC. OR STEEL	Xo	4,2,5											ft.
TOP PLATES	R	4,3,1											ft.
TOP PLATES	W	4,3,2											in.
TOP PLATES	T	4,3,3											in.
BOTTOM PLATES	R	4,4,1											ft.
BOTTOM PLATES	W	4,4,2											in.
BOTTOM PLATES	T	4,4,3											in.
COMPOSITE SLAB	R	4,5,1											ft.
COMPOSITE SLAB	W	4,5,2											in.
COMPOSITE SLAB	T	4,5,3											in.
COMPOSITE SLAB	e	4,5,4											in.
COMPOSITE SLAB	As	4,5,5											in.²
NON-COMP. P-LOADS	X	4,6,1											ft.
NON-COMP. P-LOADS	X	0,0,0											ft.
NON-COMP. P-LOADS	P	4,6,2											kips
NON-COMP. P-LOADS	P	0,0,0											kips
COMP. P-LDS.	X	4,7,1											ft.
COMP. P-LDS.	P	4,7,2											kips
NON-COMP. Wp	X	4,8,1											ft.
NON-COMP. Wp	W	4,8,2											kips/ft.
COMP. Wp	X	4,9,1											ft.
COMP. Wp	W	4,9,2											kips/ft.

STATE HIGHWAY DEPARTMENT OF GEORGIA

BRIDGE DIVISION

01/19/71 THE ANALYSIS OF CONTINUOUS BEAMS FOR HIGHWAY BRIDGES PROB. NO. EX.5

EXAMPLE NO.5 82-104-82 COMPOSITE CONTINUOUS UNIT, WF WITH COVER PLATES

BEAM CONSTANTS

BEAM IDENTITY	NO. OF SPANS	LIVE LOAD CLASS	BEAM TYPE	WDLNC	WDLC	WSW	WG	F	BM.SPAC.	SZR
EXAMPLE NO.5	3	HS20	COMP.ST'L.INT.	0.555	0.300	0.0	490.0	29.00	6.5000	23.850

OPTIONAL BEAM CONSTANTS

DFM	DFVE	DFD	N	3N	LIVE LOAD USED	STRESS CYCLES	FY	FU	FC	FS
1.1818	1.1818	0.8000	10	30	TR'K LANE MIL.	500000	36.000	58.000	0.0	0.0

SPAN 1 INPUT DATA

M	S	L	* NUMBER OF RANGES								* BEAM SECTION TYPE
			BM	TPL	BPL	CS	PN	PC	PWN	PWC	
1	0	82.417	2	2	4	3	4	0	0	0	WFLG

BEAM SECTION AND LOADS

CODE	RANGE 1	RANGE 2	RANGE 3	RANGE 4	RANGE 5	RANGE 6	RANGE 7	RANGE 8	RANGE 9	RANGE 10
400	59.917	82.417								
401	W36X135	W36X194								
431	65.417	82.417								
432	0.0	10.500								
433	0.0	1.688								
441	9.500	58.500	65.417	82.417						
442	0.0	10.500	0.0	10.500						
443	0.0	0.625	0.0	1.688						
451	9.500	58.500	82.417							
452	0.0	78.000	0.0							
453	0.0	6.500	0.0							
454	0.0	1.500	0.0							
455	0.0	0.0	0.0							
461	25.000	50.000	57.500	75.000						
462	0.216	0.216	2.126	0.216						

EXAMPLE NO.5 SPAN 2 INPUT DATA

M	S	L	* NUMBER OF RANGES								* BEAM SECTION TYPE
			BM	TPL	BPL	CS	PN	PC	PWN	PWC	
2	0	104.000	3	3	5	3	7	C	0	0	WFLG

BEAM SECTION AND LOADS

CODE	RANGE 1	RANGE 2	RANGE 3	RANGE 4	RANGE 5	RANGE 6	RANGE 7	RANGE 8	RANGE 9	RANGE 10
400	22.500	81.500	104.000							
401	W36X194	W36X135	W36X194							
431	17.000	87.000	104.000							
432	10.500	0.0	10.500							
433	1.688	0.0	1.688							
441	17.000	27.000	77.000	87.000	104.000					
442	10.500	0.0	10.500	0.0	10.500					
443	1.688	0.0	0.625	0.0	1.688					
451	27.000	77.000	104.000							
452	0.0	78.000	0.0							
453	0.0	6.500	0.0							
454	0.0	1.500	0.0							
455	0.0	0.0	0.0							
461	7.417	25.000	32.500	52.000	71.500	79.000	96.583			
462	0.216	2.126	0.216	0.216	0.216	2.126	0.216			

SPAN 3 INPUT DATA SAME AS SPAN 1 INPUT DATA

EXAMPLE NO.5

BEAM SECTION PROPERTIES AT SPAN TWENTIETH POINTS

NON-COMPOSITE

S.PT	D.WEB	I	SM.BS	SM.TS	SM.TC	Q/I
1.00	35.55	7820.0	439.9	439.9	0.0	0.0
1.10	35.55	7820.0	439.9	439.9	0.0	0.0
1.20	35.55	9663.3	610.1	475.2	0.0	0.0
1.30	35.55	9663.3	610.1	475.2	0.0	0.0
1.40	35.55	9663.3	610.1	475.2	0.0	0.0
1.50	35.55	9663.3	610.1	475.2	0.0	0.0
1.60	35.55	9663.3	610.1	475.2	0.0	0.0
1.70	35.55	9663.3	610.1	475.2	0.0	0.0
1.80	36.48	25018.5	1255.4	1255.4	0.0	0.0
1.90	36.48	25018.5	1255.4	1255.4	0.0	0.0
2.00	36.48	25018.5	1255.4	1255.4	0.0	0.0
2.10	36.48	25018.5	1255.4	1255.4	0.0	0.0
2.20	36.48	12100.0	663.4	663.4	0.0	0.0
2.30	35.55	9663.3	610.1	475.2	0.0	0.0
2.40	35.55	9663.3	610.1	475.2	0.0	0.0
2.50	35.55	9663.3	610.1	475.2	0.0	0.0
2.60	35.55	9663.3	610.1	475.2	0.0	0.0
2.70	35.55	9663.3	610.1	475.2	0.0	0.0
2.80	36.48	12100.0	663.4	663.4	0.0	0.0
2.90	36.48	25018.5	1255.4	1255.4	0.0	0.0
3.00	36.48	25018.5	1255.4	1255.4	0.0	0.0
3.10	36.48	25018.5	1255.4	1255.4	0.0	0.0
3.20	36.48	25018.5	1255.4	1255.4	0.0	0.0
3.30	35.55	9663.3	610.1	475.2	0.0	0.0
3.40	35.55	9663.3	610.1	475.2	0.0	0.0
3.50	35.55	9663.3	610.1	475.2	0.0	0.0
3.60	35.55	9663.3	610.1	475.2	0.0	0.0
3.70	35.55	9663.3	610.1	475.2	0.0	0.0
3.80	35.55	9663.3	610.1	475.2	0.0	0.0
3.90	35.55	7820.0	439.9	439.9	0.0	0.0
4.00	35.55	7820.0	439.9	439.9	0.0	0.0

S.PT	D.WEB	I	SM.BS	SM.TS	SM.TC	Q/I
1.05	35.55	7820.0	439.9	439.9	0.0	0.0
1.15	35.55	9663.3	610.1	475.2	0.0	0.0
1.25	35.55	9663.3	610.1	475.2	0.0	0.0
1.35	35.55	9663.3	610.1	475.2	0.0	0.0
1.45	35.55	9663.3	610.1	475.2	0.0	0.0
1.55	35.55	9663.3	610.1	475.2	0.0	0.0
1.65	35.55	9663.3	610.1	475.2	0.0	0.0
1.75	36.48	12100.0	663.4	663.4	0.0	0.0
1.85	36.48	25018.5	1255.4	1255.4	0.0	0.0
1.95	36.48	25018.5	1255.4	1255.4	0.0	0.0
2.05	36.48	25018.5	1255.4	1255.4	0.0	0.0
2.15	36.48	25018.5	1255.4	1255.4	0.0	0.0
2.25	35.55	7820.0	439.9	439.9	0.0	0.0
2.35	35.55	9663.3	610.1	475.2	0.0	0.0
2.45	35.55	9663.3	610.1	475.2	0.0	0.0
2.55	35.55	9663.3	610.1	475.2	0.0	0.0
2.65	35.55	9663.3	610.1	475.2	0.0	0.0
2.75	35.55	7820.0	439.9	439.9	0.0	0.0
2.85	36.48	25018.5	1255.4	1255.4	0.0	0.0
2.95	36.48	25018.5	1255.4	1255.4	0.0	0.0
3.05	36.48	25018.5	1255.4	1255.4	0.0	0.0
3.15	36.48	25018.5	1255.4	1255.4	0.0	0.0
3.25	36.48	12100.0	663.4	663.4	0.0	0.0
3.35	35.55	9663.3	610.1	475.2	0.0	0.0
3.45	35.55	9663.3	610.1	475.2	0.0	0.0
3.55	35.55	9663.3	610.1	475.2	0.0	0.0
3.65	35.55	9663.3	610.1	475.2	0.0	0.0
3.75	35.55	9663.3	610.1	475.2	0.0	0.0
3.85	35.55	9663.3	610.1	475.2	0.0	0.0
3.95	35.55	7820.0	439.9	439.9	0.0	0.0

SPAN PROPERTIES

SPAN	DL	KL	KLM	CLR	CLRM	CRLM	CRL	KRM	KR	DR
1	1.000000	0.004933	0.004031	0.683728	0.328930	0.0	0.440870	0.005344	0.007650	0.518917
2	0.481083	0.006223	0.004955	0.615544	0.357200	0.357200	0.615546	0.004955	0.006223	0.481082
3	0.518918	0.007650	0.005344	0.440869	0.0	0.328930	0.683730	0.004031	0.004933	1.000000

EXAMPLE NO.5

BEAM SECTION PROPERTIES AT SPAN TWENTIETH POINTS

COMPOSITE N = 30

S.PT	D.WEB	I	SM.BS	SM.TS	SM.TC	Q/I	S.PT	D.WEB	I	SM.BS	SM.TS	SM.TC	Q/I
1.00	35.55	7820.0	439.9	439.9	0.0	0.0	1.05	35.55	7820.0	439.9	439.9	0.0	0.0
1.10	35.55	7820.0	439.9	439.9	0.0	0.0	1.15	35.55	17516.5	777.1	1284.8	809.7	0.017737
1.20	35.55	17516.5	777.1	1284.8	809.7	0.017737	1.25	35.55	17516.5	777.1	1284.8	809.7	0.017737
1.30	35.55	17516.5	777.1	1284.8	809.7	0.017737	1.35	35.55	17516.5	777.1	1284.8	809.7	0.017737
1.40	35.55	17516.5	777.1	1284.8	809.7	0.017737	1.45	35.55	17516.5	777.1	1284.8	809.7	0.017737
1.50	35.55	17516.5	777.1	1284.8	809.7	0.017737	1.55	35.55	17516.5	777.1	1284.8	809.7	0.017737
1.60	35.55	17516.5	777.1	1284.8	809.7	0.017737	1.65	35.55	17516.5	777.1	1284.8	809.7	0.017737
1.70	35.55	17516.5	777.1	1284.8	809.7	0.017737	1.75	36.48	12100.0	663.4	663.4	0.0	0.0
1.80	36.48	25018.5	1255.4	1255.4	0.0	0.0	1.85	36.48	25018.5	1255.4	1255.4	0.0	0.0
1.90	36.48	25018.5	1255.4	1255.4	0.0	0.0	1.95	36.48	25018.5	1255.4	1255.4	0.0	0.0
2.00	36.48	25018.5	1255.4	1255.4	0.0	0.0							
							2.05	36.48	25018.5	1255.4	1255.4	0.0	0.0
2.10	36.48	25018.5	1255.4	1255.4	0.0	0.0	2.15	36.48	25018.5	1255.4	1255.4	0.0	0.0
2.20	36.48	12100.0	663.4	663.4	0.0	0.0	2.25	35.55	7820.0	439.9	439.9	0.0	0.0
2.30	35.55	17516.5	777.1	1284.8	809.7	0.017737	2.35	35.55	17516.5	777.1	1284.8	809.7	0.017737
2.40	35.55	17516.5	777.1	1284.8	809.7	0.017737	2.45	35.55	17516.5	777.1	1284.8	809.7	0.017737
2.50	35.55	17516.5	777.1	1284.8	809.7	0.017737	2.55	35.55	17516.5	777.1	1284.8	809.7	0.017737
2.60	35.55	17516.5	777.1	1284.8	809.7	0.017737	2.65	35.55	17516.5	777.1	1284.8	809.7	0.017737
2.70	35.55	17516.5	777.1	1284.8	809.7	0.017737	2.75	35.55	7820.0	439.9	439.9	0.0	0.0
2.80	36.48	12100.0	663.4	663.4	0.0	0.0	2.85	36.48	25018.5	1255.4	1255.4	0.0	0.0
2.90	36.48	25018.5	1255.4	1255.4	0.0	0.0	2.95	36.48	25018.5	1255.4	1255.4	0.0	0.0
3.00	36.48	25018.5	1255.4	1255.4	0.0	0.0							
							3.05	36.48	25018.5	1255.4	1255.4	0.0	0.0
3.10	36.48	25018.5	1255.4	1255.4	0.0	0.0	3.15	36.48	25018.5	1255.4	1255.4	0.0	0.0
3.20	36.48	25018.5	1255.4	1255.4	0.0	0.0	3.25	36.48	12100.0	663.4	663.4	0.0	0.0
3.30	35.55	17516.5	777.1	1284.8	809.7	0.017737	3.35	35.55	17516.5	777.1	1284.8	809.7	0.017737
3.40	35.55	17516.5	777.1	1284.8	809.7	0.017737	3.45	35.55	17516.5	777.1	1284.8	809.7	0.017737
3.50	35.55	17516.5	777.1	1284.8	809.7	0.017737	3.55	35.55	17516.5	777.1	1284.8	809.7	0.017737
3.60	35.55	17516.5	777.1	1284.8	809.7	0.017737	3.65	35.55	17516.5	777.1	1284.8	809.7	0.017737
3.70	35.55	17516.5	777.1	1284.8	809.7	0.017737	3.75	35.55	17516.5	777.1	1284.8	809.7	0.017737
3.80	35.55	17516.5	777.1	1284.8	809.7	0.017737	3.85	35.55	17516.5	777.1	1284.8	809.7	0.017737
3.90	35.55	7820.0	439.9	439.9	0.0	0.0	3.95	35.55	7820.0	439.9	439.9	0.0	0.0
4.00	35.55	7820.0	439.9	439.9	0.0	0.0							

SPAN PROPERTIES

SPAN	DL	KL	KLM	CLR	CLRM	CRLM	CRL	KRM	KR	DR
1	1.000000	0.006230	0.005404	0.565486	0.263713	0.0	0.393795	0.006954	0.008946	0.533653
2	0.466347	0.007142	0.006077	0.542446	0.314500	0.314500	0.542448	0.006077	0.007142	0.466345
3	0.533655	0.008946	0.006954	0.393793	0.0	0.263713	0.565488	0.005404	0.006230	1.000000

EXAMPLE NO.5

BEAM SECTION PROPERTIES AT SPAN TWENTIETH POINTS

COMPOSITE N = 10

S.PT	D.WEB	I	SM.BS	SM.TS	SM.TC	Q/I	S.PT	D.WEB	I	SM.BS	SM.TS	SM.TC	Q/I
1.00	35.55	7820.0	439.9	439.9	0.0	0.0	1.05	35.55	7820.0	439.9	439.9	0.0	0.0
1.10	35.55	7820.0	439.9	439.9	0.0	0.0	1.15	35.55	25080.9	866.6	3468.0	1646.6	0.024221
1.20	35.55	25080.9	866.6	3468.0	1646.6	0.024221	1.25	35.55	25080.9	866.6	3468.0	1646.6	0.024221
1.30	35.55	25080.9	866.6	3468.0	1646.6	0.024221	1.35	35.55	25080.9	866.6	3468.0	1646.6	0.024221
1.40	35.55	25080.9	866.6	3468.0	1646.6	0.024221	1.45	35.55	25080.9	866.6	3468.0	1646.6	0.024221
1.50	35.55	25080.9	866.6	3468.0	1646.6	0.024221	1.55	35.55	25080.9	866.6	3468.0	1646.6	0.024221
1.60	35.55	25080.9	866.6	3468.0	1646.6	0.024221	1.65	35.55	25080.9	866.6	3468.0	1646.6	0.024221
1.70	35.55	25080.9	866.6	3468.0	1646.6	0.024221	1.75	36.48	12100.0	663.4	663.4	0.0	0.0
1.80	36.48	25018.5	1255.4	1255.4	0.0	0.0	1.85	36.48	25018.5	1255.4	1255.4	0.0	0.0
1.90	36.48	25018.5	1255.4	1255.4	0.0	0.0	1.95	36.48	25018.5	1255.4	1255.4	0.0	0.0
2.00	36.48	25018.5	1255.4	1255.4	0.0	0.0							
							2.05	36.48	25018.5	1255.4	1255.4	0.0	0.0
2.10	36.48	25018.5	1255.4	1255.4	0.0	0.0	2.15	36.48	25018.5	1255.4	1255.4	0.0	0.0
2.20	36.48	12100.0	663.4	663.4	0.0	0.0	2.25	35.55	7820.0	439.9	439.9	0.0	0.0
2.30	35.55	25080.9	866.6	3468.0	1646.6	0.024221	2.35	35.55	25080.9	866.6	3468.0	1646.6	0.024221
2.40	35.55	25080.9	866.6	3468.0	1646.6	0.024221	2.45	35.55	25080.9	866.6	3468.0	1646.6	0.024221
2.50	35.55	25080.9	866.6	3468.0	1646.6	0.024221	2.55	35.55	25080.9	866.6	3468.0	1646.6	0.024221
2.60	35.55	25080.9	866.6	3468.0	1646.6	0.024221	2.65	35.55	25080.9	866.6	3468.0	1646.6	0.024221
2.70	35.55	25080.9	866.6	3468.0	1646.6	0.024221	2.75	35.55	7820.0	439.9	439.9	0.0	0.0
2.80	36.48	12100.0	663.4	663.4	0.0	0.0	2.85	36.48	25018.5	1255.4	1255.4	0.0	0.0
2.90	36.48	25018.5	1255.4	1255.4	0.0	0.0	2.95	36.48	25018.5	1255.4	1255.4	0.0	0.0
3.00	36.48	25018.5	1255.4	1255.4	0.0	0.0							
							3.05	36.48	25018.5	1255.4	1255.4	0.0	0.0
3.10	36.48	25018.5	1255.4	1255.4	0.0	0.0	3.15	36.48	25018.5	1255.4	1255.4	0.0	0.0
3.20	36.48	25018.5	1255.4	1255.4	0.0	0.0	3.25	36.48	12100.0	663.4	663.4	0.0	0.0
3.30	35.55	25080.9	866.6	3468.0	1646.6	0.024221	3.35	35.55	25080.9	866.6	3468.0	1646.6	0.024221
3.40	35.55	25080.9	866.6	3468.0	1646.6	0.024221	3.45	35.55	25080.9	866.6	3468.0	1646.6	0.024221
3.50	35.55	25080.9	866.6	3468.0	1646.6	0.024221	3.55	35.55	25080.9	866.6	3468.0	1646.6	0.024221
3.60	35.55	25080.9	866.6	3468.0	1646.6	0.024221	3.65	35.55	25080.9	866.6	3468.0	1646.6	0.024221
3.70	35.55	25080.9	866.6	3468.0	1646.6	0.024221	3.75	35.55	25080.9	866.6	3468.0	1646.6	0.024221
3.80	35.55	25080.9	866.6	3468.0	1646.6	0.024221	3.85	35.55	25080.9	866.6	3468.0	1646.6	0.024221
3.90	35.55	7820.0	439.9	439.9	0.0	0.0	3.95	35.55	7820.0	439.9	439.9	0.0	0.0
4.00	35.55	7820.0	439.9	439.9	0.0	0.0							

SPAN PROPERTIES

SPAN	DL	KL	KLM	CLR	CLRM	CRLM	CRL	KRM	KR	DR
1	1.000000	0.006976	0.006223	0.501200	0.230290	0.0	0.364897	0.007829	0.009582	0.540523
2	0.459477	0.007601	0.006655	0.502573	0.291240	0.291240	0.502575	0.006655	0.007601	0.459475
3	0.540525	0.009582	0.007829	0.364895	0.0	0.230290	0.501202	0.006223	0.006976	1.000000

EXAMPLE NO.5 MOMENTS(KIP-FEET) AT SPAN TENTH AND MISC. POINTS

	* NON-COMPOSITE DEAD LOADS					*	COMPOSITE DEAD LOADS				*	LIVE LOADS				*	TOTALS	
S.P	BEAM	PN	WDLNC	WPN	TOT.NC	*	PC	WDLC	WPC	TOT.C	*	SWK.+	SWK.-	LL+I +	LL+I -	*	MAX.+	MAX.-
1.1	31.2	2.0	111.5	-0.0	144.7		-0.0	63.3	-0.0	63.3		0.0	0.0	323.5 T	-48.3 T		531.4	159.7
1.2	52.6	4.0	185.2	-0.0	241.8		-0.0	106.2	-0.0	106.2		0.0	0.0	545.2 T	-96.5 T		893.3	251.5
1.3	63.4	6.0	221.3	-0.0	290.6		-0.0	128.7	-0.0	128.7		0.0	0.0	670.5 T	-144.8 T		1089.9	274.5
1.4	63.4	6.2	219.6	-0.0	289.3		-0.0	130.9	-0.0	130.9		0.0	0.0	727.5 T	-193.1 T		1147.7	227.1
1.5	52.7	6.5	180.3	-0.0	239.4		-0.0	112.7	-0.0	112.7		0.0	0.0	715.6 T	-241.3 T		1067.7	110.7
1.6	31.3	6.7	103.3	-0.0	141.2		-0.0	74.1	-0.0	74.1		0.0	0.0	646.1 T	-289.6 T		861.4	-74.4
1.7	-0.9	4.8	-11.5	-0.0	-7.5		-0.0	15.1	-0.0	15.1		0.0	0.0	506.6 T	-337.9 T		514.1	-330.3
1.8	-44.0	-14.3	-163.9	-0.0	-222.2		-0.0	-64.3	-0.0	-64.3		0.0	0.0	318.4 T	-386.2 T		31.9	-672.6
1.9	-105.2	-33.4	-354.0	-0.0	-492.6		-0.0	-164.0	-0.0	-164.0		0.0	0.0	127.8 M	-440.4 L		-528.8	-1097.0
2.0	-187.7	-54.1	-581.9	0.0	-823.6		0.0	-284.1	0.0	-284.1		0.0	0.0	106.9 T	-688.0 L		-1000.8	-1795.8
2.1	-91.0	-27.0	-311.7	-0.0	-429.7		-0.0	-138.1	-0.0	-138.1		0.0	0.0	133.9 M	-367.0 L		-433.9	-934.8
2.2	-27.4	-1.5	-101.6	-0.0	-130.5		-0.0	-24.5	-0.0	-24.5		0.0	0.0	343.0 T	-272.3 T		188.0	-427.3
2.3	14.9	10.8	48.4	-0.0	74.1		-0.0	56.6	-0.0	56.6		0.0	0.0	554.7 T	-224.9 T		685.4	-94.2
2.4	40.5	12.2	138.5	-0.0	191.2		-0.0	105.2	-0.0	105.2		0.0	0.0	686.4 T	-198.2 L		982.8	98.2
2.5	49.0	13.3	168.5	-0.0	230.8		-0.0	121.5	-0.0	121.5		0.0	0.0	720.9 T	-198.2 L		1073.2	154.1
2.6	40.5	12.2	138.5	-0.0	191.2		-0.0	105.2	-0.0	105.2		0.0	0.0	686.4 T	-198.2 L		982.8	98.2
2.7	14.9	10.8	48.4	-0.0	74.1		-0.0	56.6	-0.0	56.6		0.0	0.0	554.7 T	-224.9 T		685.4	-94.2
2.8	-27.4	-1.5	-101.6	-0.0	-130.5		-0.0	-24.5	-0.0	-24.5		0.0	0.0	343.0 T	-272.3 T		188.0	-427.3
2.9	-91.0	-27.0	-311.7	-0.0	-429.7		-0.0	-138.1	-0.0	-138.1		0.0	0.0	133.9 M	-367.0 L		-433.9	-934.8
3.0	-187.7	-54.1	-581.9	0.0	-823.6		0.0	-284.1	0.0	-284.1		0.0	0.0	106.9 T	-688.0 L		-1000.8	-1795.8
3.1	-105.2	-33.4	-354.0	-0.0	-492.6		-0.0	-164.0	-0.0	-164.0		0.0	0.0	127.8 M	-440.4 L		-528.8	-1097.0
3.2	-44.0	-14.3	-163.9	-0.0	-222.2		-0.0	-64.3	-0.0	-64.3		0.0	0.0	318.4 T	-386.2 T		31.9	-672.6
3.3	-0.9	4.8	-11.5	-0.0	-7.5		-0.0	15.1	-0.0	15.1		0.0	0.0	506.6 T	-337.9 T		514.1	-330.3
3.4	31.3	6.7	103.3	-0.0	141.2		-0.0	74.1	-0.0	74.1		0.0	0.0	646.1 T	-289.6 T		861.4	-74.4
3.5	52.7	6.5	180.3	-0.0	239.4		-0.0	112.7	-0.0	112.7		0.0	0.0	715.6 T	-241.3 T		1067.7	110.7
3.6	63.4	6.2	219.6	-0.0	289.3		-0.0	130.9	-0.0	130.9		0.0	0.0	727.5 T	-193.1 T		1147.7	227.1
3.7	63.4	6.0	221.3	-0.0	290.6		-0.0	128.7	-0.0	128.7		0.0	0.0	670.5 T	-144.8 T		1089.9	274.5
3.8	52.6	4.0	185.2	-0.0	241.8		-0.0	106.2	-0.0	106.2		0.0	0.0	545.2 T	-96.5 T		893.3	251.5
3.9	31.2	2.0	111.5	-0.0	144.7		-0.0	63.3	-0.0	63.3		0.0	0.0	323.5 T	-48.3 T		531.4	159.7
1.115					162.7					71.2		0.0	0.0	363.2	-55.6		597.0	178.2
1.710					-27.1					8.2		0.0	0.0	483.7	-341.8		464.8	-360.7
1.727					-60.2					-4.3		0.0	0.0	455.1	-350.2		390.6	-414.8
1.794					-205.6					-58.7		0.0	0.0	337.0	-383.8		72.7	-648.2
2.163					-228.8					-62.3		0.0	0.0	248.7	-283.8		-42.4	-574.9
2.216					-91.5					-9.1		0.0	0.0	388.6	-264.9		288.0	-365.5
2.260					2.6					27.7		0.0	0.0	471.5	-239.1		501.8	-208.8
2.740					2.6					27.7		0.0	0.0	471.5	-239.1		501.9	-208.8
2.784					-91.5					-9.1		0.0	0.0	388.6	-264.9		288.0	-365.5
2.837					-228.8					-62.3		0.0	0.0	248.7	-283.8		-42.4	-574.9
3.206					-205.6					-58.7		0.0	0.0	337.0	-383.8		72.7	-648.2
3.273					-60.2					-4.3		0.0	0.0	455.1	-350.2		390.6	-414.8
3.290					-27.1					8.2		0.0	0.0	483.7	-341.8		464.8	-360.7
3.885					162.7					71.2		0.0	0.0	363.2	-55.6		597.0	178.2

EXAMPLE NO.5 STRESSES AT SPAN TENTH AND MISCELLANEOUS POINTS

	* ACTUAL STRESSES(PSI)									* ALLOWABLE FATIGUE STRESSES(PSI)								
	TOTAL DEAD LOAD			D.L. + L.L. POS.			D.L. + L.L. NEG.			* BASE METAL		BASE M. ADJ.		BASE M. ADJ.		BASE M. ADJ.		FLANGE
	TOP	TOP	BOT.	TOP	TOP	BOT.	TOP	TOP	BOT.	TOP	BOT.	FILLET WELD		CON.FIL.WELD		BUTT WELD		W STUD
S.PT.	CONC.	STEEL	STEEL	CONC.	STEEL	STEEL	CONC.	STEEL	STEEL	STEEL	STEEL	TOP S	BOT.S	TOP S	BOT.S	TOP S	BOT.S	TOP S
1.100	0	5672	-5672	0	14494	-14494	0	4355	-4355	20000	20000	17869	17869	20000	20000	20000	-20000	20000
1.200	52	7098	-6396	449	8985	-13947	-17	6764	-5060	20000	20000	20000	19617	20000	20000	20000	-20000	20000
1.300	63	8541	-7704	552	10861	-16989	-41	8040	-5699	20000	20000	20000	18809	20000	20000	20000	-20000	20000
1.400	64	8527	-7710	594	11044	-17785	-76	7859	-5037	20000	20000	20000	17439	20000	20000	20000	-20000	20000
1.500	55	7098	-6449	577	9574	-16358	-120	6263	-3107	20000	20000	20000	15431	20000	20000	20000	-19495	20000
1.600	36	4257	-3920	507	6492	-12868	-174	3255	89	20000	20000	20000	12413	20000	20000	20000	-17125	20000
1.700	7	-49	-84	376	1703	-7099	-238	-1218	4594	20000	20000	7287	7589	16031	16695	12237	-12275	11262
1.800	0	-2738	2738	0	305	-305	0	-6429	6429	20000	20000	11933	11933	20000	20000	-16708	19192	20000
1.900	0	-6275	6275	0	-5054	5054	0	-10485	10485	20000	20000	20000	20000	20000	20000	-20000	20000	20000
2.000	0	-10588	10588	0	-9566	9566	0	-17164	17164	20000	20000	20000	20000	20000	20000	-20000	20000	20000
2.100	0	-5427	5427	0	-4147	4147	0	-8935	8935	20000	20000	20000	20000	20000	20000	-20000	20000	20000
2.200	0	-2804	2804	0	3400	-3400	0	-7729	7729	20000	20000	8681	8681	19098	19098	-13514	14387	20000
2.300	27	2399	-2331	432	4319	-10012	-135	1621	782	20000	20000	20000	11593	20000	20000	20000	-16405	20000
2.400	51	5810	-5385	552	8185	-14890	-92	5124	-2640	20000	20000	20000	15194	20000	20000	20000	-19324	20000
2.500	60	6963	-6416	585	9457	-16398	-84	6277	-3671	20000	20000	20000	16106	20000	20000	20000	-19972	20000
2.600	51	5810	-5385	552	8185	-14890	-92	5124	-2640	20000	20000	20000	15194	20000	20000	20000	-19324	20000
2.700	27	2399	-2331	432	4319	-10012	-135	1621	782	20000	20000	20000	11594	20000	20000	20000	-16405	20000
2.800	0	-2804	2804	0	3400	-3400	0	-7729	7729	20000	20000	8681	8681	19098	19098	-13514	14387	20000
2.900	0	-5427	5427	0	-4147	4147	0	-8935	8935	20000	20000	20000	20000	20000	20000	-20000	20000	20000
3.000	0	-10588	10588	0	-9566	9566	0	-17164	17164	20000	20000	20000	20000	20000	20000	-20000	20000	20000
3.100	0	-6275	6275	0	-5054	5054	0	-10485	10485	20000	20000	20000	20000	20000	20000	-20000	20000	20000
3.200	0	-2738	2738	0	305	-305	0	-6429	6429	20000	20000	11933	11933	20000	20000	-16708	19192	20000
3.300	7	-49	-84	376	1703	-7099	-238	-1218	4594	20000	20000	7286	7588	16030	16695	12236	-12275	11262
3.400	36	4257	-3920	507	6492	-12868	-174	3254	89	20000	20000	20000	12413	20000	20000	20000	-17125	20000
3.500	55	7098	-6449	577	9574	-16358	-120	6263	-3107	20000	20000	20000	15430	20000	20000	20000	-19495	20000
3.600	64	8527	-7710	594	11044	-17785	-76	7859	-5037	20000	20000	20000	17439	20000	20000	20000	-20000	20000
3.700	63	8541	-7704	552	10861	-16989	-41	8040	-5699	20000	20000	20000	18809	20000	20000	20000	-20000	20000
3.800	52	7098	-6396	449	8985	-13947	-17	6764	-5060	20000	20000	20000	19617	20000	20000	20000	-20000	20000
3.900	0	5672	-5672	0	14494	-14494	0	4355	-4355	20000	20000	17869	17869	20000	20000	20000	-20000	20000

EXAMPLE NO.5 STRESSES AT SPAN TENTH AND MISCELLANEOUS POINTS

*	ACTUAL STRESSES(PSI)									*	ALLOWABLE FATIGUE STRESSES(PSI)								
	TOTAL DEAD LOAD			D.L. + L.L. POS.			D.L. + L.L. NEG.			*	BASE METAL		BASE M. ADJ.		BASE M. ADJ.		BASE M. ADJ.		FLANGE
	TOP	TOP	BOT.	TOP	TOP	BOT.	TOP	TOP	BOT.		TOP	BOT.	FILLET WELD		CON.FIL.WELD		BUTT WELD		W STUD
S.PT.	CONC.	STEEL	STEEL	CONC.	STEEL	STEEL	CONC.	STEEL	STEEL		STEEL	STEEL	TOP S	BOT.S	TOP S	BOT.S	TOP S	BOT.S	TOP S
1.115	0	6378	-6378	0	16284	-16284	0	4860	-4860		20000	20000	17818	17818	20000	20000	20000	-20000	20000
1.115	35	4773	-4298	299	6029	-9328	-5	4580	-3528		20000	20000	20000	20000	20000	20000	20000	-20000	20000
1.710	4	-608	407	356	1065	-6290	-245	-1791	5139		20000	19812	7839	6879	17246	15134	-12567	-11416	11900
1.710	0	-516	516	0	12676	-12676	0	-9838	9838		20000	20000	7037	7037	15483	15483	11846	-11612	20000
1.727	0	-1760	1760	0	10653	-10653	0	-11313	11313		18540	18540	6437	6437	14163	14163	-10859	10898	20000
1.727	0	-1167	1167	0	7065	-7065	0	-7502	7502		18540	18540	6437	6437	14163	14163	-10859	10898	20000
1.794	0	-4781	4781	0	1315	-1315	0	-11724	11724		20000	20000	11239	11239	20000	20000	-16081	18190	20000
1.794	0	-2526	2526	0	694	-694	0	-6195	6195		20000	20000	11239	11239	20000	20000	-16081	18190	20000
2.163	0	-2782	2782	0	-405	405	0	-5495	5495		20000	20000	13496	13496	20000	20000	-18025	20000	20000
2.163	0	-5265	5265	0	-767	767	0	-10399	10399		20000	20000	13496	13496	20000	20000	-18025	20000	20000
2.216	0	-1819	1819	0	5209	-5209	0	-6611	6611		20000	20000	6991	6991	15380	15380	-11554	11773	20000
2.216	0	-2744	2744	0	7855	-7855	0	-9968	9968		20000	20000	6991	6991	15380	15380	-11554	11773	20000
2.260	0	828	-828	0	13688	-13688	0	-5694	5694		20000	20000	8827	8827	19420	19420	14610	-13673	20000
2.260	13	325	-480	357	1957	-7009	-160	-501	2831		20000	20000	9949	8903	20000	19587	16294	-13754	14142
2.740	13	325	-480	357	1957	-7009	-160	-501	2831		20000	20000	9949	8903	20000	19587	16295	-13754	14143
2.740	0	828	-828	0	13688	-13688	0	-5694	5694		20000	20000	8827	8827	19420	19420	14610	-13673	20000
2.784	0	-2744	2744	0	7855	-7855	0	-9968	9968		20000	20000	6991	6991	15380	15380	-11554	11773	20000
2.784	0	-1819	1819	0	5209	-5209	0	-6611	6611		20000	20000	6991	6991	15380	15380	-11554	11773	20000
2.837	0	-5265	5265	0	-767	767	0	-10399	10399		20000	20000	13496	13496	20000	20000	-18025	20000	20000
2.837	0	-2782	2782	0	-405	405	0	-5495	5495		20000	20000	13496	13496	20000	20000	-18025	20000	20000
3.206	0	-2526	2526	0	694	-694	0	-6195	6195		20000	20000	11239	11239	20000	20000	-16081	18190	20000
3.206	0	-4781	4781	0	1314	-1314	0	-11724	11724		20000	20000	11239	11239	20000	20000	-16081	18190	20000
3.273	0	-1167	1167	0	7065	-7065	0	-7502	7502		18540	18540	6437	6437	14163	14163	-10859	10898	20000
3.273	0	-1760	1760	0	10653	-10653	0	-11313	11313		18540	18540	6437	6437	14163	14163	-10859	10898	20000
3.290	0	-516	516	0	12676	-12676	0	-9838	9838		20000	20000	7037	7037	15483	15483	11846	-11612	20000
3.290	4	-608	407	356	1065	-6291	-245	-1791	5139		20000	19812	7839	6879	17245	15134	-12567	-11416	11900
3.885	35	4773	-4298	299	6029	-9328	-5	4580	-3528		20000	20000	20000	20000	20000	20000	20000	-20000	20000
3.885	0	6378	-6378	0	16284	-16284	0	4860	-4860		20000	20000	17818	17818	20000	20000	20000	-20000	20000

EXAMPLE NO.5 SHEARS(KIPS) AND SHEAR CONNECTOR SPACINGS(INCHES) AT SPAN TENTH POINTS AND REACTIONS(KIPS)

	DEAD LOADS						*		LIVE LOADS		* MAXIMUM	LL SHEAR	SHEAR
S.PT	BEAM	PN	WN	WPN	TOT.C	TOT.DL *	SWK.+	SWK.-	LL+I +	LL+I - *	V OR R	RANGE	CON.SP.
1.00	4.345	0.242	15.811	0.0	8.915	29.313	0.0	0.0	45.569 T	-6.194 T	74.881	51.763	0.0
1.10	3.229	0.242	11.237	-0.0	6.443	21.150	0.0	0.0	39.562 T	-6.332 L	60.712	45.894	0.0
1.20	1.952	0.242	6.662	-0.0	3.970	12.826	0.0	0.0	33.632 T	-9.474 L	46.458	43.106	22.843
1.30	0.651	0.242	2.088	-0.0	1.498	4.479	0.0	0.0	27.808 T	-13.053 L	32.287	40.861	24.000
1.40	-0.649	0.026	-2.486	-0.0	-0.975	-4.084	0.0	0.0	22.153 T	-18.980 T	-23.064	41.133	23.939
1.50	-1.949	0.026	-7.060	-0.0	-3.447	-12.431	0.0	0.0	16.755 T	-25.306 T	-37.737	42.061	23.410
1.60	-3.249	0.026	-11.634	-0.0	-5.920	-20.778	0.0	0.0	11.604 T	-31.064 T	-51.842	42.668	23.077
1.70	-4.549	-2.316	-16.208	-0.0	-8.392	-31.466	0.0	0.0	7.195 T	-36.411 T	-67.877	43.606	22.581
1.80	-6.118	-2.316	-20.782	-0.0	-10.865	-40.081	0.0	0.0	4.123 M	-41.177 T	-81.258	45.300	0.0
1.90	-8.716	-2.316	-25.357	-0.0	-13.338	-49.726	0.0	0.0	1.991 L	-45.337 T	-95.063	47.327	0.0
2.00	-11.314	-2.532	-29.931	-0.0	-15.810	-59.587	0.0	0.0	0.684 L	-48.805 T	-108.392	49.489	0.0
R1-2	22.255	5.198	58.791	0.0	31.410	117.654	0.0		70.146 L		187.800		
2.00	10.941	2.666	28.860	0.0	15.600	58.067	0.0	0.0	48.341 T	-4.820 T	106.408	53.161	0.0
2.10	7.662	2.450	23.088	-0.0	12.480	45.680	0.0	0.0	44.371 T	-4.820 T	90.051	49.191	0.0
2.20	4.854	2.450	17.316	-0.0	9.360	33.980	0.0	0.0	39.459 T	-6.159 L	73.439	45.618	0.0
2.30	3.281	0.324	11.544	-0.0	6.240	21.389	0.0	0.0	33.745 T	-9.479 T	55.134	43.223	22.781
2.40	1.641	0.108	5.772	-0.0	3.120	10.641	0.0	0.0	27.633 T	-15.267 T	38.273	42.899	22.953
2.50	-0.000	0.108	-0.000	-0.0	-0.000	0.108	0.0	0.0	21.392 T	-21.392 T	21.500	42.784	23.015
2.60	-1.641	-0.108	-5.772	-0.0	-3.120	-10.641	0.0	0.0	15.267 T	-27.633 T	-38.274	42.900	22.953
2.70	-3.282	-0.324	-11.544	-0.0	-6.240	-21.390	0.0	0.0	9.479 T	-33.745 T	-55.134	43.224	22.781
2.80	-4.854	-2.450	-17.316	-0.0	-9.360	-33.980	0.0	0.0	6.159 L	-39.459 T	-73.439	45.618	0.0
2.90	-7.662	-2.450	-23.088	-0.0	-12.480	-45.680	0.0	0.0	4.820 T	-44.371 T	-90.051	49.191	0.0
3.00	-10.941	-2.666	-28.860	-0.0	-15.600	-58.067	0.0	0.0	4.820 T	-48.341 T	-106.408	53.161	0.0
R2-3	22.255	5.198	58.791	0.0	31.410	117.654	0.0		70.146 L		187.800		
3.00	11.314	2.532	29.931	0.0	15.810	59.587	0.0	0.0	48.805 T	-0.684 L	108.392	49.489	0.0
3.10	8.716	2.316	25.357	-0.0	13.338	49.726	0.0	0.0	45.337 T	-1.991 L	95.063	47.327	0.0
3.20	6.118	2.316	20.782	-0.0	10.865	40.081	0.0	0.0	41.177 T	-4.123 M	81.258	45.300	0.0
3.30	4.549	2.316	16.208	-0.0	8.392	31.466	0.0	0.0	36.411 T	-7.195 T	67.877	43.606	22.581
3.40	3.249	-0.026	11.634	-0.0	5.920	20.777	0.0	0.0	31.064 T	-11.604 T	51.841	42.668	23.077
3.50	1.949	-0.026	7.060	-0.0	3.447	12.431	0.0	0.0	25.306 T	-16.755 T	37.737	42.061	23.410
3.60	0.649	-0.026	2.486	-0.0	0.975	4.084	0.0	0.0	18.980 T	-22.153 T	23.064	41.133	23.938
3.70	-0.652	-0.242	-2.088	-0.0	-1.498	-4.479	0.0	0.0	13.053 L	-27.808 T	-32.287	40.861	24.000
3.80	-1.952	-0.242	-6.662	-0.0	-3.970	-12.826	0.0	0.0	9.474 L	-33.632 T	-46.458	43.106	22.843
3.90	-3.229	-0.242	-11.237	-0.0	-6.443	-21.150	0.0	0.0	6.332 L	-39.562 T	-60.712	45.895	0.0
4.00	-4.345	-0.242	-15.811	-0.0	-8.915	-29.313	0.0	0.0	6.194 T	-45.569 T	-74.881	51.763	0.0

SPAN 1 V LANE = 17.751 V 14 FT. = 18.620 SPAN 3 V LANE = 17.751 V 14 FT. = 18.620

EXAMPLE NO.5

DEAD LOAD DEFLECTIONS(INCHES) AT SPAN TWENTIETH POINTS

S.PT	BEAM	PN	WN	WPN	TOT.NC	TOT.C	TOT.DL	S.PT	BEAM	PN	WN	WPN	TOT.NC	TOT.C	TOT.DL
1.05	0.039	0.004	0.136	0.0	0.178	0.048	0.227	1.10	0.076	0.007	0.264	0.0	0.347	0.093	0.440
1.15	0.109	0.010	0.379	0.0	0.498	0.130	0.629	1.20	0.138	0.013	0.478	0.0	0.629	0.163	0.792
1.25	0.162	0.016	0.557	0.0	0.734	0.190	0.924	1.30	0.179	0.018	0.615	0.0	0.811	0.209	1.021
1.35	0.189	0.019	0.650	0.0	0.858	0.222	1.080	1.40	0.193	0.020	0.661	0.0	0.874	0.226	1.100
1.45	0.190	0.020	0.650	0.0	0.859	0.224	1.083	1.50	0.181	0.019	0.617	0.0	0.817	0.214	1.030
1.55	0.166	0.018	0.565	0.0	0.749	0.197	0.946	1.60	0.147	0.016	0.498	0.0	0.661	0.175	0.836
1.65	0.125	0.013	0.420	0.0	0.558	0.149	0.707	1.70	0.101	0.010	0.337	0.0	0.448	0.120	0.568
1.75	0.077	0.006	0.256	0.0	0.339	0.090	0.429	1.80	0.055	0.003	0.182	0.0	0.240	0.062	0.303
1.85	0.036	0.000	0.117	0.0	0.153	0.038	0.191	1.90	0.019	-0.001	0.062	0.0	0.080	0.018	0.098
1.95	0.007	-0.002	0.022	0.0	0.027	0.004	0.031								
2.05	0.002	0.005	0.004	0.0	0.010	0.009	0.019	2.10	0.012	0.012	0.036	0.0	0.060	0.032	0.092
2.15	0.028	0.021	0.088	0.0	0.137	0.064	0.201	2.20	0.049	0.032	0.156	0.0	0.236	0.102	0.338
2.25	0.074	0.042	0.240	0.0	0.355	0.143	0.498	2.30	0.099	0.051	0.328	0.0	0.478	0.182	0.660
2.35	0.123	0.058	0.408	0.0	0.589	0.216	0.804	2.40	0.141	0.064	0.471	0.0	0.676	0.242	0.918
2.45	0.153	0.067	0.512	0.0	0.731	0.258	0.989	2.50	0.157	0.068	0.526	0.0	0.751	0.263	1.014
2.55	0.153	0.067	0.512	0.0	0.731	0.258	0.989	2.60	0.141	0.064	0.471	0.0	0.676	0.242	0.917
2.65	0.123	0.058	0.408	0.0	0.589	0.216	0.804	2.70	0.099	0.051	0.328	0.0	0.478	0.182	0.660
2.75	0.074	0.042	0.240	0.0	0.355	0.143	0.498	2.80	0.049	0.032	0.156	0.0	0.236	0.102	0.338
2.85	0.028	0.021	0.088	0.0	0.137	0.064	0.201	2.90	0.012	0.012	0.036	0.0	0.060	0.032	0.092
2.95	0.002	0.005	0.004	0.0	0.010	0.009	0.019								
3.05	0.007	-0.002	0.022	0.0	0.027	0.004	0.031	3.10	0.019	-0.001	0.062	0.0	0.080	0.018	0.098
3.15	0.036	0.000	0.117	0.0	0.153	0.038	0.191	3.20	0.055	0.003	0.182	0.0	0.240	0.062	0.303
3.25	0.077	0.006	0.256	0.0	0.339	0.090	0.429	3.30	0.101	0.010	0.337	0.0	0.448	0.120	0.568
3.35	0.125	0.013	0.420	0.0	0.558	0.149	0.707	3.40	0.147	0.016	0.498	0.0	0.661	0.175	0.836
3.45	0.166	0.018	0.565	0.0	0.749	0.197	0.946	3.50	0.181	0.019	0.617	0.0	0.817	0.214	1.030
3.55	0.190	0.020	0.650	0.0	0.859	0.224	1.083	3.60	0.193	0.020	0.661	0.0	0.874	0.226	1.100
3.65	0.189	0.019	0.650	0.0	0.858	0.222	1.080	3.70	0.179	0.018	0.615	0.0	0.811	0.209	1.021
3.75	0.162	0.016	0.557	0.0	0.734	0.190	0.924	3.80	0.138	0.013	0.478	0.0	0.629	0.163	0.792
3.85	0.109	0.010	0.379	0.0	0.498	0.130	0.629	3.90	0.076	0.007	0.264	0.0	0.347	0.093	0.440
3.95	0.039	0.004	0.136	0.0	0.178	0.048	0.227								

LIVE LOAD DEFLECTIONS(INCHES)

SPAN	AT	LANE	TRUCK	MIL.	SIDEWALK	L/800
1	0.500 L	0.607	0.742	0.532	0.0	1.236
2	0.500 L	0.881	1.036	0.729	0.0	1.560
3	0.500 L	0.607	0.742	0.532	0.0	1.236

EXAMPLE NO. 5: COMMENTS

The beam in this example is the same as the beam given in Example number 3 except that the top cover plates in the positive moment areas have been replaced by a section of composite slab. Also the beam section in these areas has been decreased, i.e., W36X160 to W36X135. The shear connector capacity is based on four $\frac{3}{4}$"ϕ studs ($H/d \geq 4$) per transverse row. Note that the weight of the effective area of the composite slab (78" x 6½") is included in the uniform non-composite dead load (WDLnc).

In this type of problem (composite) the beam is actually analyzed three times. Note in the output the three pages of beam section properties. The maximum range of concrete stresses in the composite slab is given in the output. These stresses will indicate if a need exists for reinforcing steel. Observe also that the live load deflection is much less than in Example problem number 3 due to the stiffness of the composite slab.

VIII. OPERATING PROCEDURE

The State Highway Department of Georgia at the present time (April, 1971) is using an IBM 360 model 50 with 256^k core storage in its data processing applications. Both the Disk Operating System (DOS, Release 24) and the full Operating System (OS, Release 17 MFT) are used. The "Continuous Beam Analysis" computer program has been compiled and tested under both systems. The F-level compiler was used under DOS, and the G-level compiler was used with the Operating System.

A. COMPATIBILITY.

The "Continuous Beam Analysis" computer program is written in Fortran IV F-level programming language primarily to obtain computer independency, and to be able in the future to incorporate the program into a Total Design System. At the present time the program has not been compiled and tested under other manufacturer's computer systems. However, this program should be computer independent and compatible both in terms of models and manufacturers. It should be noted that low core storage capacity or the unavailability of a Fortran IV compiler would restrict the use of this program.

B. COMPILING THE PROGRAM.

The "Continuous Beam Analysis" computer program consists of a mainline program and two subroutines, SUBRI and SUBRII. The mainline program is comprised of four phases, Phase I, II, III and IV. Following is a brief description of the function of each phase.

PHASE	FUNCTION
I	Reads, checks and prints the input data.
II	Integration of the spans is performed by computing the various properties of the beam section at the span fortieth points. In addition, influence lines for moments over the intermediate supports and various other factors (stiffness, carry-over, etc.) are obtained. The output obtained consists of the Beam Section Properties and Beam Span Properties.
III	Computes and prints the moment and stresses, due to the various live and dead loads, and allowable fatigue stresses.
IV	Computes and lists the shears, reactions, shear connector spacings, and dead and live load deflections.

Subroutine I consists of several routines used by the mainline program. Subroutine II consists of two routines used by the mainline program and Subroutine I.

Core storage requirements are approximately 122,000 positions (bytes), not including any supervisor. If the computer system has a sufficiently large core storage capacity, the compilation process will consist simply of compiling the mainline with the two subroutines, linkage-editing and cataloging the program into the systems library (relocatable and/or core image) with appropriate names.

If the computer system has less core storage than required by the program and operating system supervisor, the mainline program can be divided into program phases and an overlay technique used. The mainline program already is structured so that the reorganization of the program will require a minimum amount of program changes. The procedure would be to divide the mainline program into the four phases previously discussed and compile each one separately. Then write a master program to "CALL" each phase (overlay) as it is required in the processing. The master program and the two subroutines would remain in core at all times. Routines that are used exclusively by one phase should be removed from Subroutine I and placed in that phase. Note that when compiling each phase the COMMON statements and other appropriate specification statements must be included with each phase in which they are required. The FORMAT statements are already placed in the phase in which they are used. The DATA statements go in Phase I and the labels assigned data by these statements need not be placed in COMMON.

When writing the mainline overlay program two conditions must be taken into account. First, provision for an Exit from the program in Phase I must be provided in case the last problem being processed contains an error. Secondly, some problems require that Phase II, III and IV be processed three times with one problem (Phase I is required only once). Refer to the last few statements of Phase IV. These two conditions should not present much of a programming problem.

C. KEY-PUNCH INSTRUCTIONS.

The input data will consist of three to nine sheets per problem with each line of the input data sheets representing a card. The number of the card columns are given in the headings of the various types of input cards for reference during and after punching. The position of the decimal is shown on the input form; however, the decimal does not occupy a card column and should not be punched. In some cases a decimal will be entered as data and will occupy a card column. In this case, the decimal is punched. Care should be taken to prevent the overlooking of a minus sign (a dash) in the input data fields.

All blank fields or card columns may be punched as zeros except in the Identification Card and Beam Identity of the Beam Constants Card. These data fields are read as alphabetic data and a zero or blank would have a significant meaning. One other exception occurs when a minus sign is used in a data field: a zero should not be punched in a data field before the minus sign. Following are examples of data fields, how the data fields are most likely to be filled in on the input data forms, and how the data field should be punched:

Input Data Form
(Punched form also)

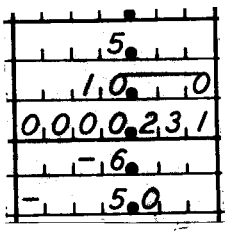

Punched Data Form

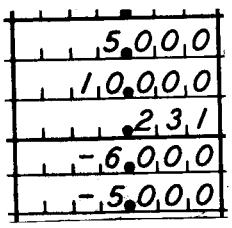

OR

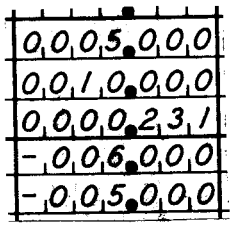

In general the input data should be punched exactly as given on the input data form.

The first sheet of the input data (Design Data) will consist of three cards which should always be punched. Each subsequent sheet (Span Data) will consist of a Span Card, which should always be punched, and several Load Cards. Only the Load Cards that contain data entered by hand (data that is not a part of the input data form green ink) should be punched. Note that all data in the Span Card and Load Cards will be numeric.

The input data cards should be punched in the same order as given in the input forms. Any exceptions to this will be clearly noted on the input forms by the Engineer.

D. COMPUTER OPERATOR INSTRUCTIONS.

No instructions as to the manual operation of the computer will be given here. The computer operator is assumed to be fully versed on the computer operation. This discussion, primarily, will present the characteristics of the program which the computer operator is required to know in order to be able to process the program.

The input data cards for each problem should be in the following order (See input data forms):

1. Identification Card.

2. Beam Constants Card.

3. Optional Beam Constants Card.

4. Span Card, Span 1.

5. Load Cards, Span 1.

6. Repeat 4 and 5 for all subsequent spans (Span Data Input Sheets).

Actually the cards should be punched in this order and there should be no reason for rearranging any of the input data cards.

The program has the ability to process one or several problems requiring only the Execute Control Card(s) with the first problem, i.e., the program automatically continues from one problem to another.

The input data cards should be entered in the card reader device in the following order:

1. Execute Control Card(s) (EXEC CONTBEAM).

2. Input Data Cards, Problem 1.

3. Input Data Cards, Problem 2.

   Repeat for each problem.

i. Input Data Cards, Last Problem.

j. End of Data Control Card (/* in card columns 1, 2).

The Execute Control Card and End of Data Control Card are dependent on the operating system being used, and the method of compiling and operation, and will not be discussed in this report.

All input to the program is from punched cards and all output from the program is listed by the printer. No intermediate I/O devices are

used. The form is automatically skipped by the program before printing the output data of each problem. The output will consist of from two to several sheets. The running time required per problem will vary from ten to forty seconds (IBM 360, Model 50) depending on the type of input data with the average run taking about twenty seconds.

After completing the processing of several problems, separate the output data of the various problems and return the output data along with the input data form to the Engineer. In order to be able to separate the output data properly, the first lines of the first sheet of the output data of each problem will contain:

STATE HIGHWAY DEPARTMENT OF GEORGIA

BRIDGE DIVISION

THE ANALYSIS OF CONTINUOUS BEAMS FOR HIGHWAY BRIDGES PROB. NO. xxxx

where xxxx is the Problem Number that is given in the Identification Card.

The program has a procedure for checking the validity of the input data and will print an error message after detecting an error in the input data. The error message will be given in the list of the output data of the problem in error. After an error the rest of that problem's input data cards are read out and the program proceeds to the next problem. Actually the only way the computer operator will know that an error has been found is to observe the output data.

The procedure after an error message is to check the input data cards of the problem in error for key-punch errors and sequence of the input data cards. If the input data cards are found to be punched correctly and in the correct sequence, return the output data with the error message and input data forms to the Engineer; if not, make the appropriate correction and rerun the problem from the beginning.