STATE	PROJECT NUMBER	SHEET NO.	TOTAL SHEETS
GA	NH000 0073 03(242)		

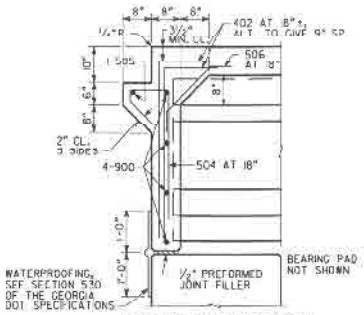

SLAB REINFORCEMENT NOT SHOWN

SECTION AT ENDWALL

(BENTS 1A & 3B)

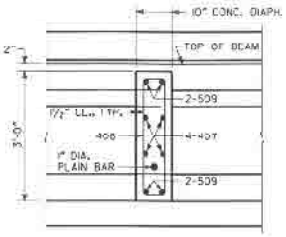

SLAB REINFORCEMENT NOT SHOWN

SECTION THRU DIAPHRAGM

(SPANS 1A & 2B)

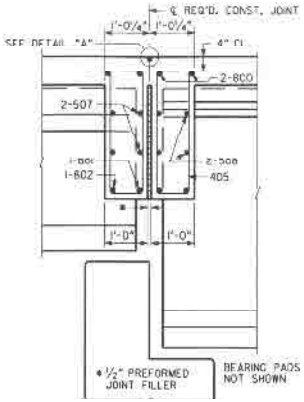

SLAB REINFORCEMENT NOT SHOWN

SECTION THRU EDGE BEAM

(BENT 2A, 2B SIMILAR)

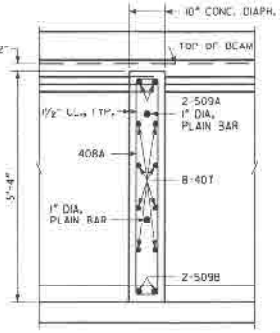

SLAB REINFORCEMENT NOT SHOWN

SECTION THRU DIAPHRAGM

(SPANS 2A & 1B)

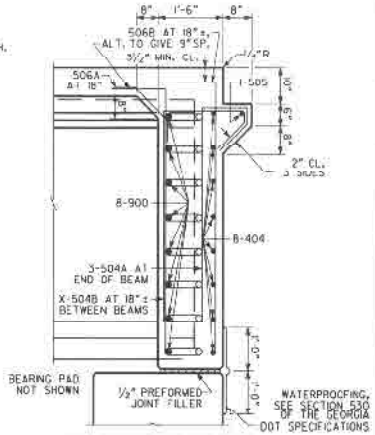

SLAB REINFORCEMENT NOT SHOWN

SECTION AT ENDWALL

(BENTS 3A & 1B)

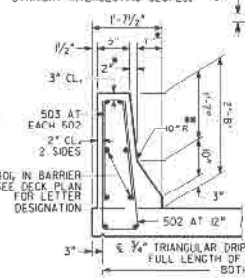

BARRIER DETAIL

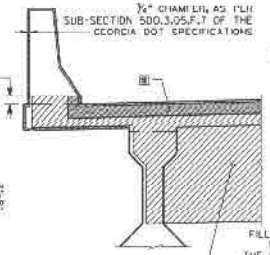

TRANSVERSE SECTION

JOINT OPENING (BENTS 2A & 2B)	
TEMPERATURE (°F)	W (IN.)
30	0.916
60	0.750
90	0.584

SEAL AS PER GEORGIA DOT SPECIFICATIONS SECTION 449.2.D. SEAL SHALL BE 1" (W) BY 1" WIDE PRIOR TO INSTALLATION.

FILLER MATERIAL IN ACCORDANCE WITH SUB-SECTION 833.2.01 OF THE GEORGIA DOT SPECIFICATIONS, HOLD IN PLACE WITH 10# GALV. NAILS

LONGITUDINAL SECTION

EXPANSION JOINT DETAILS

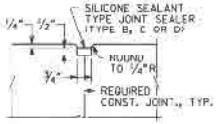

DETAIL "A"

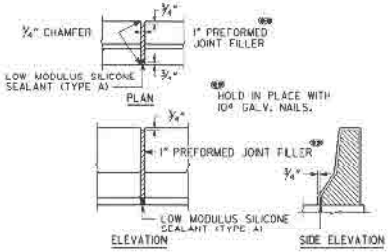

DETAILS OF 1" EXPANSION JOINT IN BARRIER

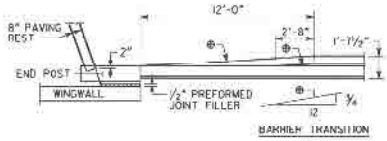

BARRIER TRANSITION DETAIL

NOTE IMPORTANT NOTICE: THIS DRAWING IS AN INCOMPLETE WORK-IN-PROGRESS AND ITS USE IS SUBJECT TO NOTE 1 ON DRAWING NO. 1-01.

BRIDGE NO. 34A & 34B

REVISIONS						
NO	DATE	DESCRIPTION	DRG.	CHKR	SUPV	APPR
A	4-30-09	Progress Deadline Use In Advance Of	ALM	JCK	DLS	WJL
B	9-28-09	SEC. SUBMISSION	ALM	JCK	DLS	WJL
C	11-10-09	ELEVATION COPTS TERMINATION	ALM			
		CONVENCNCE DIRECTION				

GTP Georgia Transportation Partners

NORTHWEST I-75/I-575 CORRIDOR

DEPARTMENT OF TRANSPORTATION
STATE OF GEORGIA

JBT J.B. Trimble, Inc.
2550 Heritage Ct, SE Suite 250
Atlanta GA 30339-3062
(770) 952 1022

BRIDGE SHEET 4 OF 5

I-75 / I-575 NORTHWEST CORRIDOR

HICKORY GROVE RD OVER I-75
MISCELLANEOUS DETAILS

COBB COUNTY NH000-0073-03(242)

DRAWING NO. 35-219