STATE	PROJECT NUMBER	SHEET NO.	TOTAL SHEETS
GA	NH000 0073 03(242)		

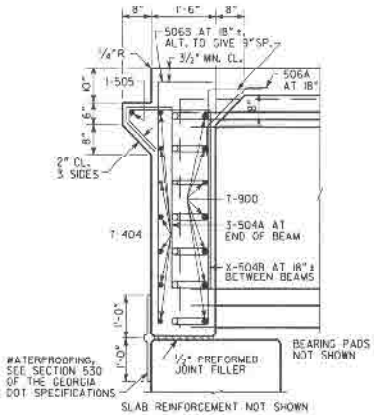

SECTION AT ENDWALL

(BENTS 1 & 4)

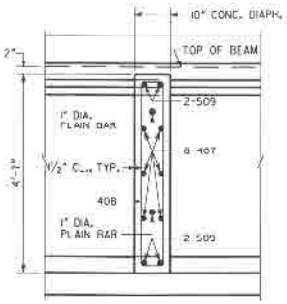

SLAB REINFORCEMENT NOT SHOWN

SECTION THRU DIAPHRAGM

(ALL SPANS)

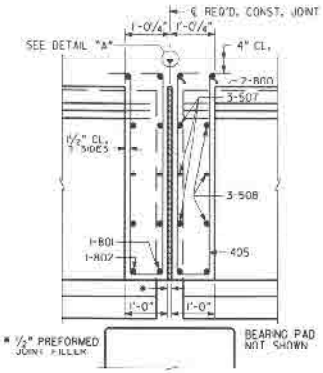

SLAB REINFORCEMENT NOT SHOWN

SECTION THRU EDGE BEAM

(BENTS 2 & 3)

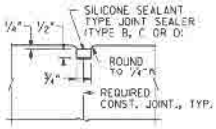

DETAIL "A"

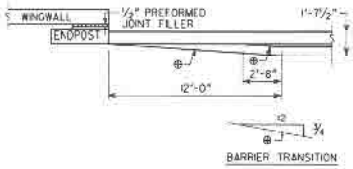

BARRIER TRANSITION DETAIL

* TAPERS TO 0" AT END POST.

** AT CONTRACTOR'S OPTION, REPLACE 10" RADIUS WITH STRAIGHT INTERSECTING SLOPES.

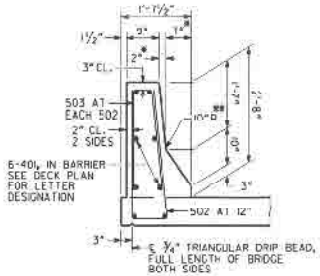

BARRIER DETAIL

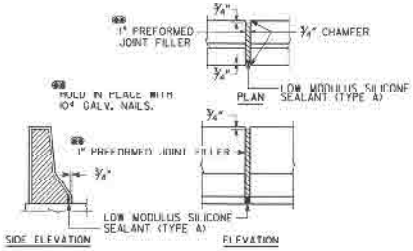

DETAILS OF 1" EXPANSION JOINT IN BARRIER

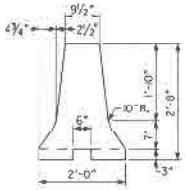

HOV BARRIER DETAIL

NOTE * IMPORTANT NOTICE: THIS DRAWING IS AN INCOMPLETE WORK-IN-PROGRESS AND ITS USE IS SUBJECT TO NOTE 1 ON DRAWING NO. 1-01.

BRIDGE NO. 32

ARTAS ETABGEN-REVISED	10/26/09	
DRAWN BY	DATE	
CHECKED BY	DATE	
SUPERVISOR	DATE	
APPROVED	DATE	

REVISIONS

NO	DATE	DESCRIPTION	DRWN	CHKR	SUPV	APPR
A	10/13/09	PROGRESS [illegible]	ASM	CDR	DLB	[illegible]
B	11/25/09	90% SUBMISSION	ASM	CDR	DLB	[illegible]
	2/26/09	PLOTTED FOR DOT 3 TERMINATION FOR	ASM			
		CONFERENCE INSPECTION				

Georgia Transportation Partners

NORTHWEST I-75/I-575 CORRIDOR

DEPARTMENT OF TRANSPORTATION
STATE OF GEORGIA

JBT J.B. Trimble, Inc.
2550 Heritage Ct. SE Suite 250
Atlanta GA 30339-3062
(770) 952 1022

BRIDGE SHEET
4 OF 5

I-75 / I-575 NORTHWEST CORRIDOR

I-75 REVERSIBLE OVER BIG SHANTY CONN

MISCELLANEOUS DETAILS

COBB COUNTY NH000-0073-03(242)

DRAWING NO. 35-206