STATE	PROJECT NUMBER	SHEET NO.	TOTAL SHEETS
GA	NH000-0073-03(242)		

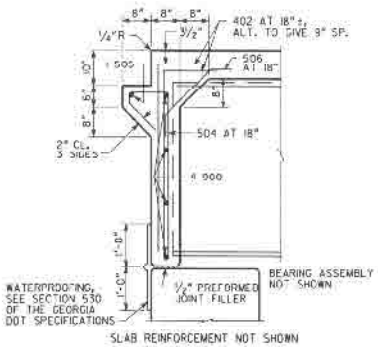

SECTION AT ENDWALL

(BENTS 1 & 4)

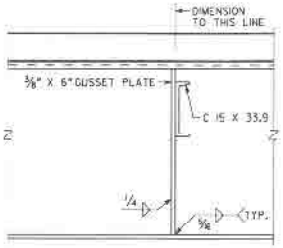

SECTION THRU DIAPHRAGM

(ALL SPANS)

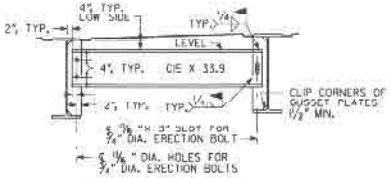

DIAPHRAGM DETAILS

NOTE: WELD DIAPHRAGMS X DECK IS POURED.

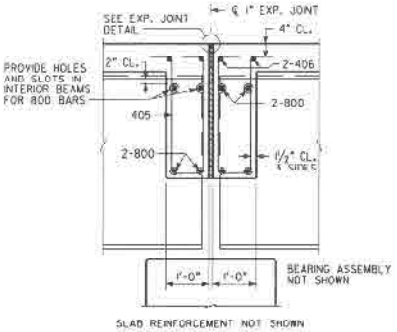

SECTION THRU EDGE BEAM

(BENTS 2 & 3)

JOINT OPENING		
TEMPERATURE (°F)	BENT 2	BENT 3
	W (IN.)	W (IN.)
30	0.961	0.984
60	0.750	0.750
90	0.533	0.516

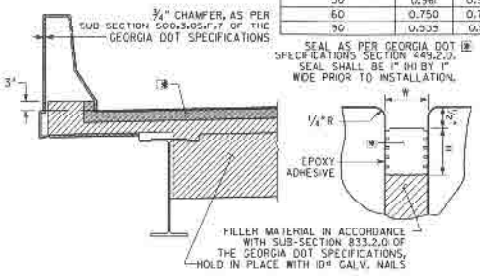

SEAL AS PER GEORGIA DOT SPECIFICATIONS SECTION 449.2.0. SEAL SHALL BE 1" (W) BY 1" WIDE PRIOR TO INSTALLATION.

TRANSVERSE SECTION — LONGITUDINAL SECTION

EXPANSION JOINT DETAILS

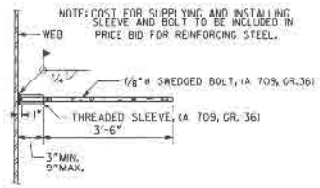

EDGE BEAM BAR LAP DETAIL

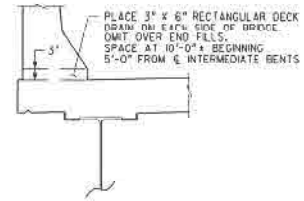

DECK DRAIN DETAIL

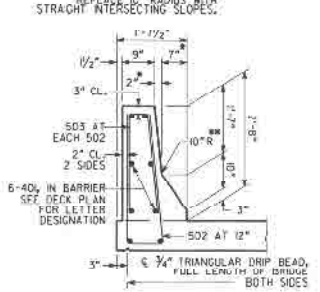

BARRIER DETAIL

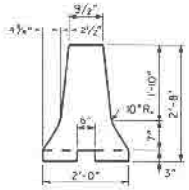

HOV BARRIER DETAIL

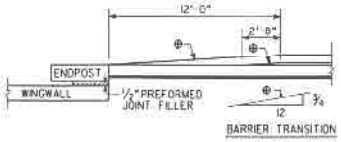

BARRIER TRANSITION

BARRIER TRANSITION DETAIL

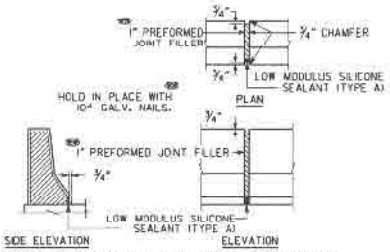

DETAILS OF 1" EXPANSION JOINT IN BARRIER

NOTE (IMPORTANT NOTICE): THE DRAWING IS AN INCOMPLETE WORK-IN-PROGRESS AND ITS USE IS SUBJECT TO NOTE 1 ON DRAWING NO. 1-01.

BRIDGE NO. 31

REVISIONS						
NO.	DATE	DESCRIPTION	DRG	CHK	SUPV	APPR
A	5/20/09	Progress Drawings for Utilities Only	KLM	JCT	GCC	CJL
B	9/25/09	50% SUBMISSION	KLM	JCT	GCC	CJL
C	11/30/09	REVISED PER COMMENTS RECEIVED FROM GDOT	KLM			
		CONVENIENCE SUBMISSION				

DRAWN BY — DATE
CHECKED BY — DATE
SUPERVISOR — DATE
APPROVED — DATE

GTP Georgia Transportation Partners

NORTHWEST I-75/I-575 CORRIDOR

DEPARTMENT OF TRANSPORTATION
STATE OF GEORGIA

JBT J.B. Trimble, Inc.
2550 Heritage Ct. SE Suite 250
Atlanta GA 30339-3062
(770) 952-1022

BRIDGE SHEET 6 OF 9

I-75 / I-575 NORTHWEST CORRIDOR

I-75 REVERSIBLE OVER NOONDAY CREEK

MISCELLANEOUS DETAILS

COBB COUNTY — NH000-0073-03(242) — DRAWING NO. 35-199