STATE	PROJECT NUMBER	SHEET NO.	TOTAL SHEETS
GA	NH000-0073-03(242)		

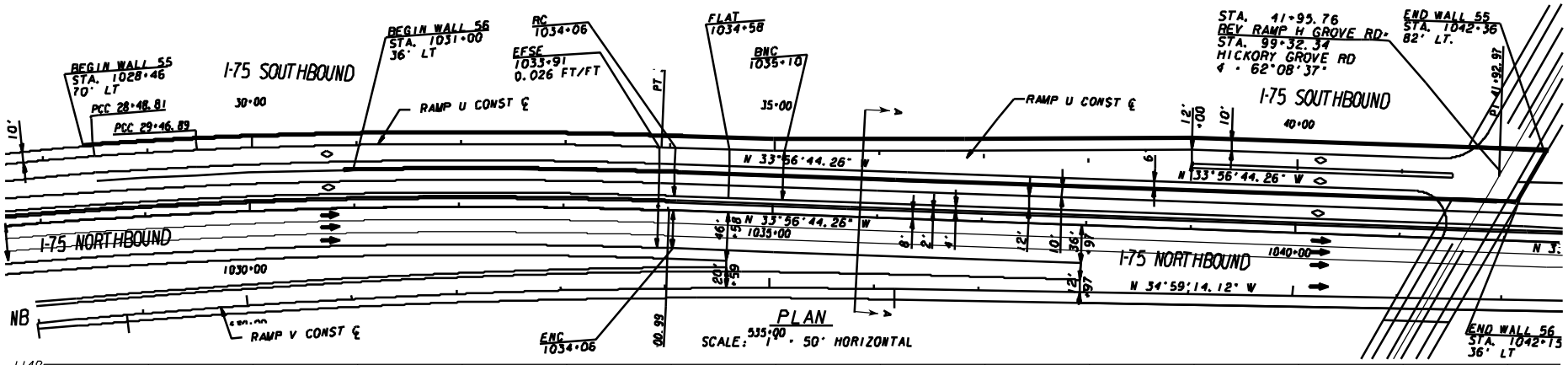

PLAN

SCALE: 1" = 50' HORIZONTAL

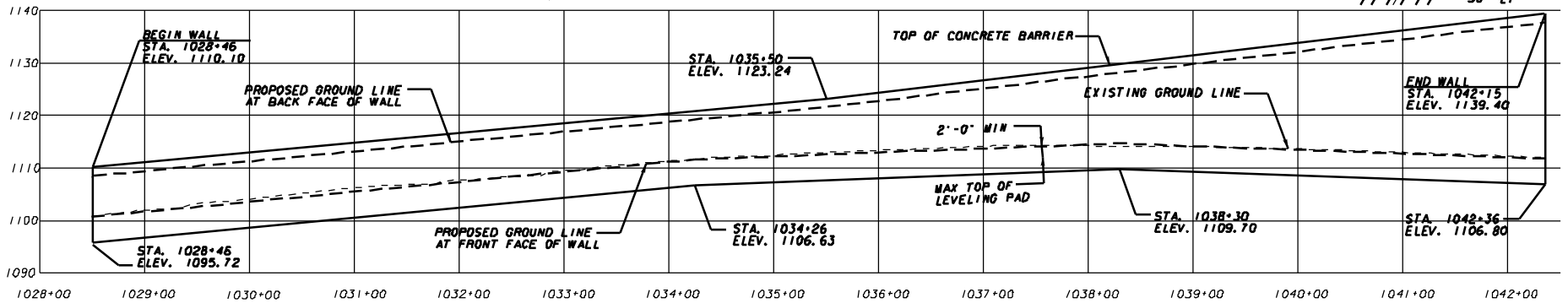

ELEVATION

SCALE: 1" = 50' HORIZONTAL
1" = 10' VERTICAL

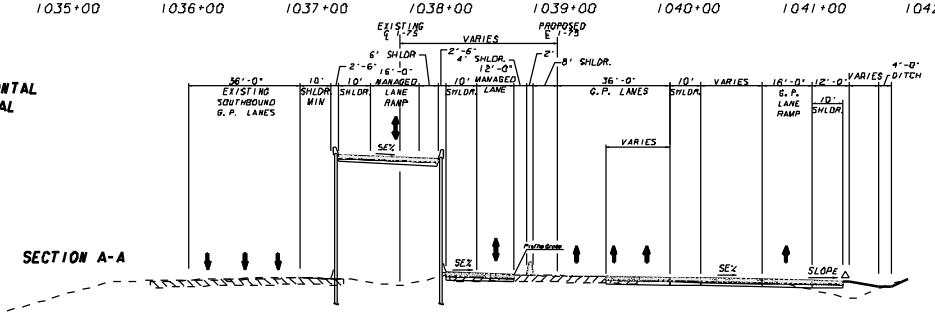

SECTION A-A

Note 1: IMPORTANT NOTICE:
This drawing is an incomplete work-in-progress and its use is subject to Note 1 on Drawing No. 1-01.

MINDY SANDERS	11/12/08
DRAWN BY	DATE
CHECKED BY	DATE
SUPERVISOR	DATE
APPROVED	DATE

REVISIONS

NO	DATE	DESCRIPTION	ORIG	CHKR	SUPV	APPR
A	6/30/09	PROGRESS DRAWINGS (ROLL PLOTS)	MHS	SJL	SJL	LFC
B	9/25/09	50% SUBMITTAL	MHS	SJL	SJL	LFC
C	11/30/09	PLOTTED PER GDOT'S TERMINATION FOR CONVENIENCE DIRECTION	MHS			

GTP Georgia Transportation Partners

NORTHWEST I-75/I-575 CORRIDOR

DEPARTMENT OF TRANSPORTATION
STATE OF GEORGIA

JBT J.B. TRIMBLE, INC.
2550 Heritage Court SE
Suite 250
Atlanta, Georgia 30339

I-75 / I-575 NORTHWEST CORRIDOR

WALL ENVELOPES

WALL 55
I-75 REV AT HICKORY GROVE RD.

DRAWING No. 3_-69

N:\TRA\255717\Drawings\Civil\Rdy\714130WEG9.dgn 24-NOV-2009 14:08