STATE	PROJECT NUMBER	SHEET NO.	TOTAL SHEETS
GA	NH000-0575-01(028)		

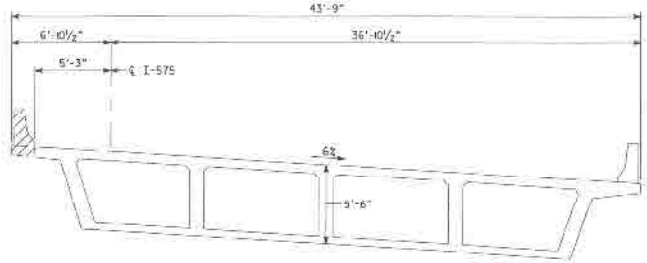

DECK SECTION
(LOOKING AHEAD, RIGHT BRIDGE)

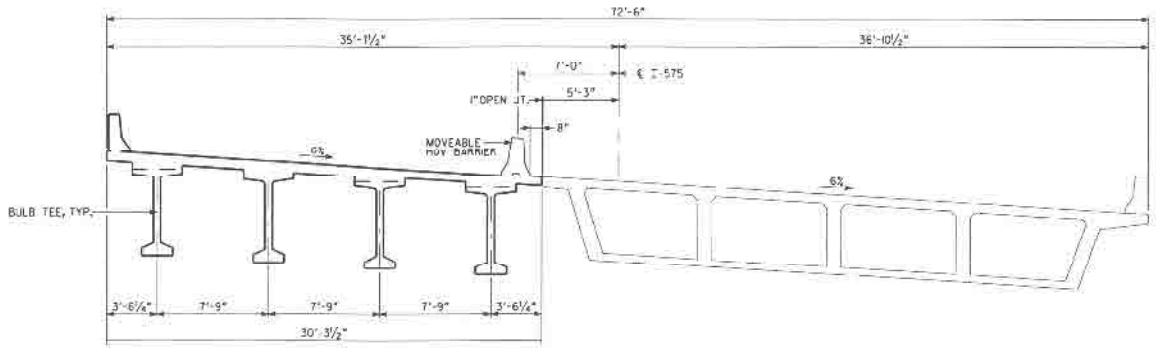

DECK SECTION
(LOOKING AHEAD, RIGHT BRIDGE)

NOTE = IMPORTANT NOTICE: THIS DRAWING IS AN INCOMPLETE WORK-IN-PROGRESS AND ITS USE IS SUBJECT TO NOTE 1 ON DRAWING NO. 1-01.

BRIDGE NO. 39

WPAS TEMPLATE (9/2003)	1/29/09
DRAWN BY	DATE
CHECKED BY	DATE
SUPERVISOR	DATE
APPROVED	DATE

REVISIONS

NO	DATE	DESCRIPTION	DRD	CHKR	SUPV	APPR
S	8/30/09	Revised per Comments [illegible]	AEM	JCB	[illegible]	[illegible]
R	8/25/09	90% SUBMISSION	AEM	JCB	[illegible]	[illegible]
C	1/29/09	PLOTTED FOR COSTS, TERMINATION FOR CONVENIENCE DIRECTION	AEM			

GTP Georgia Transportation Partners

NORTHWEST I-75/I-575 CORRIDOR

DEPARTMENT OF TRANSPORTATION
STATE OF GEORGIA

JBT J.B. Trimble, Inc.
2550 Heritage Ct, SE Suite 250
Atlanta GA 30339-3062
(770) 952 1022

BRIDGE SHEET
2 OF 2

I-75 / I-575 NORTHWEST CORRIDOR

I-575 REVERSIBLE OVER BELLS FERRY RD
CONSTRUCTION SEQUENCE

COBB COUNTY NH000-0575-01(028)

DRAWING NO. 35-23