STATE	PROJECT NUMBER	SHEET NO.	TOTAL SHEETS
GA	CSSTP-0006-00(869)	1	370

DEPARTMENT OF TRANSPORTATION
STATE OF GEORGIA

PLAN AND PROFILE OF PROPOSED
BIG SHANTY CONNECTOR PHASE 1
COBB COUNTY

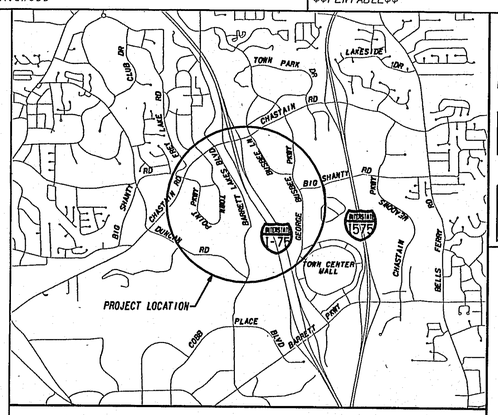

LOCATION SKETCH

DESIGN DATA:	BIG SHANTY	I-75
TRAFFIC A.D.T.:	9900 (2011)	150600 (2011)
TRAFFIC A.D.T.:	19000 (2031)	166400 (2031)
TRAFFIC D.H.V.:	1690 (2031)	13915 (2031)
DIRECTIONAL DIST:	65%	65%
% TRUCKS:	4%	11%
24 HR.TRUCKS %:	5%	13%
SPEED DESIGN:	45 MPH	65 MPH

LOCATION & DESIGN
APPROVAL DATE: 01/23/2008

FUNCTIONAL CLASS:
URBAN MINOR ARTERIAL

THIS PROJECT IS 100% IN COBB COUNTY AND IS 100% IN CONG.DIST.NO. 11.

PROJECT DESIGNATION: FULL OVERSIGHT
DESIGNED IN ENGLISH UNITS.

THIS PROJECT HAS BEEN PREPARED USING THE HORIZONTAL GEORGIA COORDINATE SYSTEM OF 1984 (NAD 1983)/94 WEST ZONE, AND THE NORTH AMERICAN VERTICAL DATUM (NAVD) OF 1988.

FEDERAL AID PROJECT
CSSTP-0006-00(869)

FEDERAL ROUTE * I-75
STATE ROUTE * 401
P.I.NO. 0006869

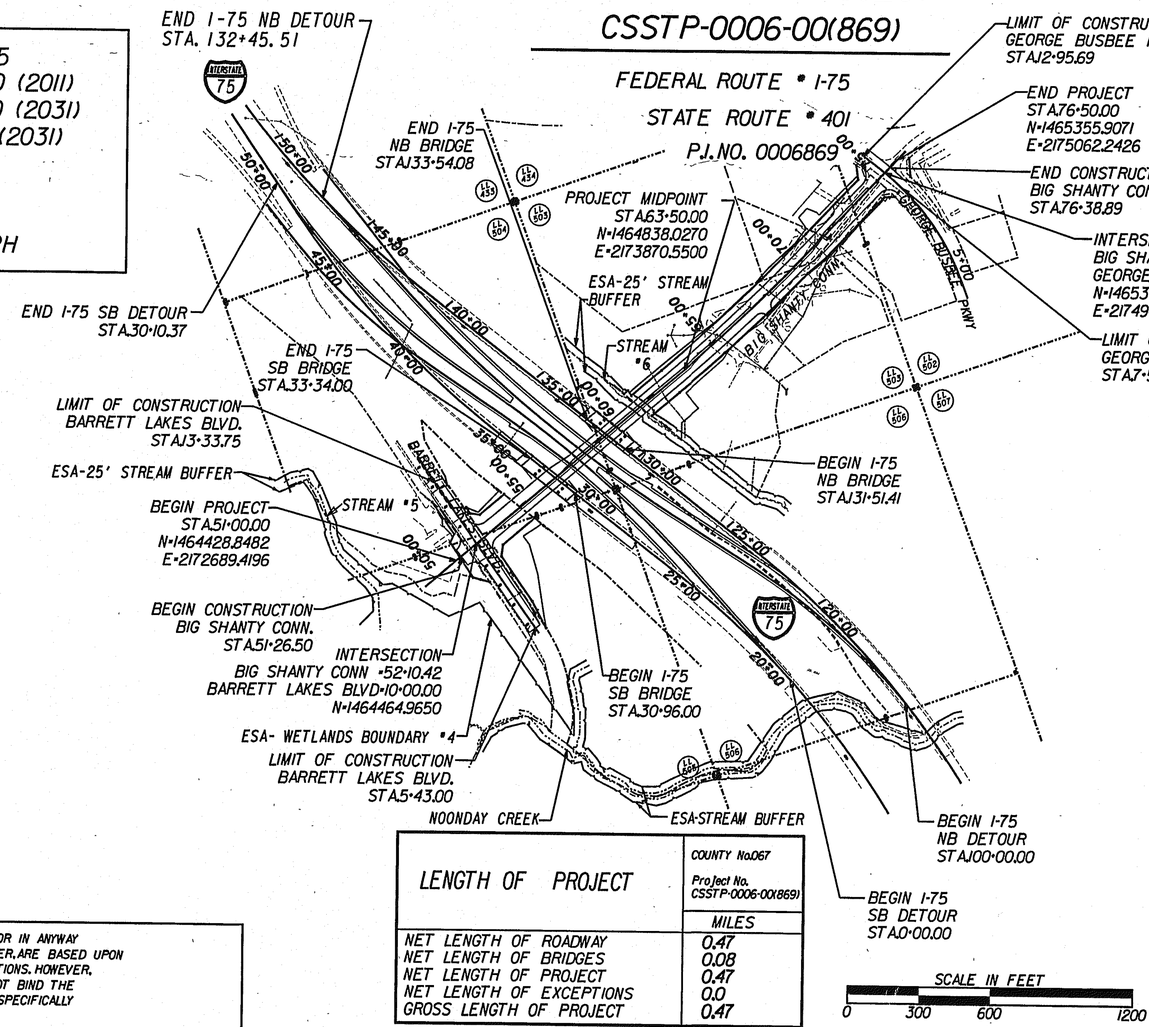

NOTE :
ALL REFERENCES IN THIS DOCUMENT, WHICH INCLUDES ALL PAPERS, WRITINGS, DOCUMENTS, DRAWINGS, OR PHOTOGRAPHS USED, OR TO BE USED IN CONNECTION WITH THIS DOCUMENT, TO "STATE HIGHWAY DEPARTMENT OF GEORGIA", "STATE HIGHWAY DEPARTMENT", GEORGIA STATE HIGHWAY DEPARTMENT", "HIGHWAY DEPARTMENT", OR "DEPARTMENT" WHEN THE CONTEXT THEREOF MEANS THE STATE HIGHWAY DEPARTMENT OF GEORGIA, AND SHALL BE DEEMED TO MEAN THE DEPARTMENT OF TRANSPORTATION.

LENGTH OF PROJECT	COUNTY No.067 Project No. CSSTP-0006-00(869)
	MILES
NET LENGTH OF ROADWAY	0.47
NET LENGTH OF BRIDGES	0.08
NET LENGTH OF PROJECT	0.47
NET LENGTH OF EXCEPTIONS	0.0
GROSS LENGTH OF PROJECT	0.47

SCALE IN FEET
0 300 600 1200

THE DATA, TOGETHER WITH ALL OTHER INFORMATION SHOWN ON THESE PLANS OR IN ANYWAY INDICATED THEREBY, WHETHER BY DRAWINGS OR NOTES, OR IN ANY OTHER MANNER, ARE BASED UPON FIELD INVESTIGATIONS AND ARE BELIEVED TO BE INDICATIVE OF ACTUAL CONDITIONS. HOWEVER, THE SAME ARE SHOWN AS INFORMATION ONLY, ARE NOT GUARANTEED, AND DO NOT BIND THE DEPARTMENT OF TRANSPORTATION IN ANY WAY. THE ATTENTION OF BIDDER IS SPECIFICALLY DIRECTED TO SUBSECTIONS 102.04, 102.05, AND 104.03 OF THE SPECIFICATIONS.

CROY ENGINEERING Engineers Planners Surveyors
200 NORTH COBB PARKWAY, BLDG 400, SUITE 413
MARIETTA, GA 30062
PHONE (770) 971-5407 FAX (770) 971-0620

GEORGIA REGISTERED No. 029656 PROFESSIONAL ENGINEER GREGORY D. TEAGUE

PREPARED BY: _____ 9-11-2009
DESIGN

SUBMITTED BY: _____ 9/11/09
DISTRICT PRECONSTRUCTION ENGINEER

9/17/09
DATE
GERALD ROSS (CHIEF ENGINEER)

PLANS COMPLETED 8-24-09	
REVISIONS	
10/01/09	
10/14/09	

SHEET NO.	DWG NO.	DESCRIPTION
		INDEX
1	1-01	COVER SHEET
2-3	2-01 TO 2-02	INDEX SHEET
4	3-01	REVISION SUMMARY SHEET
5-6	4-01 TO 4-02	GENERAL NOTES SHEET
7-14	5-01 TO 5-08	TYPICAL SECTION SHEETS
15-21	6-01 TO 6-07	SUMMARY OF QUANTITIES SHEETS
22-23	9-01 TO 9-02	DETAILED ESTIMATE SHEET
24-25	10-01 TO 10-02	TRAFFIC FLOW DIAGRAM
26-28	11-01 TO 11-03	CONSTRUCTION LAYOUT SHEETS
29-35	13-01 TO 13-07	MAINLINE PLAN SHEETS
36-37	14-01 TO 14-02	CROSSROAD PLAN SHEETS
38-39	15-01 TO 15-02	MAINLINE PROFILE SHEETS
40-42	16-01 TO 16-03	CROSSROAD PROFILE SHEETS
43	17-01	DRIVEWAY PROFILE SHEET
44-48	18-01 TO 18-05	SPECIAL GRADING
49-78	19-01 TO 19-30	STAGING PLAN SHEETS (STAGES 1 THRU 3)
79-81	19-31 TO 19-33	STAGING PROFILE SHEETS
82-102	19-34 TO 19-54	STAGING CROSS SECTION SHEETS
103-104	20-01 TO 20-02	STAGING DETAILS
105	21-01	DRAINAGE AREA MAP
106-114	22-01 TO 22-09	DRAINAGE PROFILE SHEETS
115-131	23-01 TO 23-16	EARTHWORK CROSS SECTION SHEETS
132-150	24-00 TO 24-18	UTILITY PLAN SHEETS
151-170	26-01 TO 26-20	SIGNING AND MARKING PLAN SHEETS
171-175	27-00 TO 27-05	SIGNAL/TRAFFIC SIGNAL COMMUNICATION PLAN SHEETS
176-183	28-00 TO 28-08	ATMS PLAN
184-200	1 TO 17	BRIDGE PLAN SHEETS - I-75 SB OVER BIG SHANTY - BRIDGE NO. 1
201-216	1 TO 16	BRIDGE PLAN SHEETS - I-75 NB OVER BIG SHANTY - BRIDGE NO. 2

SHEET NO.	DWG NO.	DESCRIPTION
		CONSTRUCTION DETAILS
217	A-2	DRIVEWAYS WITH TAPERED ENTRANCES CONCRETE VALLEY GUTTER (02/2003)
218	A-3	SPECIAL DETAILS - CONCRETE SIDEWALK DETAILS CURB CUT (WHEELCHAIR) RAMPS (06/2009)
219	A-4	DETECTABLE WARNING SURFACE TRUNCATED DOME SIZE, SPACING AND ALIGNMENT REQUIREMENTS(06/2009)
220	D-3	MEDIAN DROP INLET SPEDIAL DESIGN (02/1974)
221	D-4	DITCH DROP INLET WITH FABRICATED SAFETY GRATE AND WEIR OPENINGS (10/2000)
222	D-5	SAFETY INLET WITH GRATES (06/1995)
223	D-6	FABRICATION DETAILS FOR SAFETY GRATES (10/1972)
224	D-7	BERM DITCHES, SIDE DITCHES, SURFACE DITCHES (07/1980)
225	D-9	CONCRETE FLUMES TYPES "A" AND "B" (10/1983)
226	D-10	4" CONCRETE DITCH PAVING DETAILS & QUANTITIES (01/1988)
227	D-22	SEDIMENT BASIN TYPE - 1 FOR USE OUTSIDE NATURAL CHANNELS (10/2001)
228	D-34	PIPE/BOX CULVERT COLLAR CONNECTION DETAIL (03/1988)
229	F-1	WOVEN WIRE FENCE (03/1988)
230	F-2	GATE DETAILS FOR CHAIN LINK FENCE & WOVEN WIRE FENCE (01/1988)
231	F-4	TYPICAL DETAILS FOR FIELD FENCING (02/1988)
232	F-5	DETAIL OF GATE TO BE USED WITH FIELD FENCING (03/1988)
233	G-11	GUARDRAIL IMPACT ATTENUATOR UNITS (04/2006)
234	M-2	SUBBASES FOR APPROACH SLABS (03/2006)
235	P-2	DETAILS AND GUIDELINES FOR FULL DEPTH SLAB REPLACEMENT (08/1999)
236	S-4B	CONSTRUCTION DETAILS SHOULDER PAVING AND SURFACING UNDER GUARDRAIL (INTERSTATES AND FREEWAYS) (09/2002)
237	S-6	TYPICAL SLOPE PAVING DETAILS (11/1988)
238	IVDS-1	COAX TERMINATION PANEL (04/2001)
239	IVDS-2	BLOCK DIAGRAM/POWER TERM PANEL (04/2001)
240	IVDS-3	VIDEO CAMERA SENSOR MOUNTING/JUNCTION BOX (04/2001)
241	T01	SIGN PLATES (01/2000)
242	T02	DETAILS FOR TYICAL FRAMEING (03/2000)
243	T03A	TYPE 7, 8 AND 9 SQUARE TUBE POST INSTALLATION DETAIL (07/2002)
244	T03B	DETAILS OF SQUARE TUBE POST (BREAKAWAY SUPPORT) (07/2002)
245	T03C	DETAILS FOR STRAIN POLE ERECTION FOR OVERHEAD SIGNS (01/2000)
246	T05A	DETAILS OF REGULATORY SIGNS (SHEET 1 OF 2) (01/2003)
247	T05B	DETAILS OF REGULATORY SIGNS (SHEET 2 OF 2) (01/2000)
248	T05C	DETAILS OF WARNING SIGNS (01/2000)
249	T11A	DETAILS OF PAVEMENT MARKING PLACEMENT ON NON-LIMITED ACCESS ROADWAY (01/2000)
250	T11B	DETAILS OF PAVEMENT MARKING PLACEMENT ON LIMITED ACCESS ROADWAY (01/2000)
251	T12A	DETAILS OF PAVEMENT MARKING ARROW LOCATION (01/2000)
252	T12B	DETAILS OF PAVEMENT MARKINGS - ARROWS (04/2000)
253	T14	DETAILS OF PAVEMENT MARKING HATCHING (11/2008)
254	T15A	DETAILS OF RAISED PAVEMENT MARKER LOCATION NON-LIMITED ACCESS ROADWAY (01/2004)
255	T15B	DETAILS OF RAISED PAVEMENT MARKER LOCATION LIMITED ACCESS ROADWAY (01/2000)
256	T15C	DETAILS OF RAISED PAVEMENT MARKERS (01/2000)
257	T-20	TRAFFIC CONTROL PEDESTRIAN ACCESSIBILITY AROUND WORKZONE-SIDEWALK DIVERSION (10/2008)
258	T-21	TRAFFIC CONTROL PEDESTRIAN ACCESSIBILITY AROUND WORKZONE-SIDEWALK DETOUR (10/2008)
259	TS 02	PULL BOX ASSEMBLY DETAILS (08/2006)
260	TS 03A	DETAILS OF PEDESTRIAN FACILITIES (03/2007)
261	TS 03B	DETAILS OF CONTROLLER CABINET EQUIPMENT (03/2007)
262	TS 04	DETAILS OF METAL TRAFFIC SIGNAL SUPPORT STRUCTURES (07/2004)
263	TS 06	DETAILS OF STRAIN POLE AND MAST ARM POLE FOUNDATION (07/2004)
264	TS 07	GROUNDING DETAILS FOR OVERHEAD SPAN WIRE SIGNS AND TRAFFIC SIGNALS (07/2004)
265	TS 08	UTILITY CLEARANCE DETAILS (06/2000)
266	TS 10	FIBER OPTIC DETAILS (SHEET 1 OF 2) (12/2001)
267	TS 11	FIBER OPTIC DETAILS (SHEET 2 OF 2) (12/2001)
268	TS 12	WARNING FLASHER INSTALLATION DETAIL (06/2000)

CROY ENGINEERING
Engineers Planners Surveyors
200 NORTH COBB PARKWAY, BLDG. 400, SUITE 4L
MARIETTA, GA 30062
PHONE: (770) 97L5407 FAX: (770) 97L0620

REVISION DATES
10/01/09

STATE OF GEORGIA
DEPARTMENT OF TRANSPORTATION
OFFICE: DISTRICT 7

INDEX

BIG SHANTY CONNECTOR
PHASE 1

DRAWING No. 2-01

GPLN

STATE	PROJECT NUMBER	SHEET NO.	TOTAL SHEETS
GA	CSSTP-0006-00(869)	3	370

SHEET NO.	DWG NO.	DESCRIPTION
		GEORGIA STANDARDS
269	1011A	BRICK MANHOLES (10/1981)
270	1011A	PRECAST REINFORCED CONCRETE MANHOLE (06/1975)
271	1019A	DROP INLETS (08/1999)
272	1030D	CONCRETE AND METAL PIPE CULVERTS SHEET 1 OF 3 (09/2001)
273	1030D	CONCRETE AND METAL PIPE CULVERTS SHEET 2 OF 3 (09/2001)
274	1030D	CONCRETE AND METAL PIPE CULVERTS SHEET 3 OF 3 (09/2001)
275	1033G	CATCH BASINS (FOR USE WITH 6" MOUNTABLE CURB & GUTTER) (12/1985)
276	1033D	CATCH BASINS (FOR USE WITH 6" OR 8" HT. CURB AND GUTTER) (08/1982)
277	1034D	CATCH BASINS (FOR USE WITH 6" OR 8" CURB AND GUTTER IN SAGS OR LOW POINTS) (08/1982)
278	1120	FLARED END SECTIONS FOR PIPES (06/2006)
279	1122-1	SAFETY END SECTION (METAL) (FOR SIDE DRAIN PIPE-OR STORM DRAIN PIPE PARALLEL TO MAINLINE)
		(SHEET 1 OF 3)(01/2005)
280	1122-2	SAFETY END SECTION (METAL) (FOR SIDE DRAIN PIPE-OR STORM DRAIN PIPE PARALLEL TO MAINLINE)
		(SHEET 2 OF 3)(01/2005)
281	1122-3	SAFETY END SECTION (CONCRETE) (FOR SIDE DRAIN PIPE-OR STORM DRAIN PIPE PARALLEL TO MAINLINE)
		(SHEET 3 OF 3)(01/2005)
282	1125	INLET HEADWALL - OUTLET HEADWALL (10/1999)
283	1401	PAVEMENT PATCHING DETAILS (STORM DRAIN OR UTILITY INSTALLATION BY OPEN CUT ACROSS
		EXISTING PAVEMENT (08-1999)
284	2332-1	CONCRETE BOX CULVERT APRONS, BAFFLES AND INLET BEVELING DETAIL AND ADJACENT BOX CULVERT
		JOINT DETAIL (1 OF 2) (06/1998)
285	2332-2	CONCRETE BOX CULVERT APRONS, BAFFLES AND INLET BEVELING DETAIL AND ADJACENT BOX CULVERT
		JOINT DETAIL (2 OF 2) (06/1998)
286	2325-1	REINFORCED CONCRETE BOX CULVERTS DOUBLE 3'x 2'6'' TO TRIPLE 6' x 6' FOR DEPTHS OF FILL UP TO 20
		FEET. (1 of 2) (11/2001)
287	2325-2	REINFORCED CONCRETE BOX CULVERTS DOUBLE 3'x 2'6'' TO TRIPLE 6' x 6' FOR DEPTHS OF FILL UP TO 20
		FEET. (2 of 2) (11/2001)
288	3054	END POST AND END POST GUARDRAIL ATTACHMENT DETAIL (09/2002)
289	4000W	GUARDRAIL WARRANT GUIDES (09/2007)
290	4010	"W" BEAM GUARDRAIL (05/1999)
291	4011A	POST AND OFFSET BLOCKS FOR "W" AND "T" BEAM GUARDRAIL (REPLACES STANDARDS 4011 & 4271) (12/2001)
292	4012C	GUARDRAIL CONNECTION AT BRIDGE END OR AT CONCRETE BARRIER END (03/2005)
293	4012D	GUARDRAIL ANCHORAGE TYPE 1 (07/2002)
294	4040	GUARDRAIL ANCHORAGE TYPE 12 (04/2006)
295	4040A	GUARDRAIL ANCHORAGE WITHOUT FLARE (ALTERNATE A) (05/1997)
296	4040B	GUARDRAIL ANCHORAGE WITHOUT FLARE (ALTERNATE B) (05/1997)
297	4051	GUARDRAIL LOCATION DETAILS FOR MULTI-LANE DIVIDED HIGHWAYS (10/1997)
298	4052	GUARDRAIL LOCATION DETAILS FOR UNDIVIDED HIGHWAYS AND ROADS (10/1997)
299	4055	GUARDRAIL LOCATIONS AT FIXED OBJECTS IN THE MEDIAN (07/1998)
300	4270	"T" BEAM GUARDRAIL (11/1999)
301	4280	GUARDRAIL LOCATION ON ROADS WITH CURB & GUTTER OR CURBS (10/1999)
302	4360	REFLECTORIZED GUARDRAIL WASHERS AND ANCHORAGE NOSE STRIPING (04/2006)
303	4960	CONCRETE BARRIER - TEMPORARY (END TREATMENT OPTIONS) (05/2007)
304	4961	DETAILS OF PRECAST TEMPORARY BARRIER (09/2006)
305	5046H	JOINT DETAILS FOR PLAIN PORTLAND CEMENT CONCRETE PAVING (01/2007)
306	9003	FEDERAL AID AND STATE PROJECT MARKERS; RIGHT OF WAY MARKERS; COUNTY LINE MARKER (04/2006)
307	9017P	REINFORCED CONCRETE APPROACH SLAB 30 FT LENGTH (TYPICAL USE WHERE SHOULDER IS ADJACENT TO
		ROADWAY AND / OR ACROSS BRIDGE) (9/2002)
308	9029B	PERFORATED UNDERDRAIN (08/1983)
309	9030C	DELINEATORS & OBJECT MARKERS AND ALTERNATE POST (04/2006)
310	9031L	RETAINING WALL TYPICAL SECTIONS, RAISING HEADWALL, AND TYPICAL PIPE PLUG (06/1998)
311	9031L	CATCH BASIN MODIFIED FOR DOUBLE GATE, CONCRETE SPRING BOX, CONCRETE STEPS, CATCH BASIN OR
		PROP. INLET CONNECTION TO CONCRETE BOX CULVERT CAPPING EXISTING DROP INLET (12-1982)
312	9031N	CHAIN-LINK WIRE FENCE (08/1985)
313	9031S	MEDIAN DROP INLET (PRECAST OR BUILT-IN PLACE) AND CONCRETE APRON (04/1996)
314	9031U	JUNCTION BOXES (PRECAST OR BUILT-IN-PLACE) PIPE COLLARS, PIPE ELBOW AND PIPE CURVED ALIGNMENT
		(07/1985)
315	9032B	CONCRETE CURB AND GUTTER, CONCRETE CURBS, CONCRETE MEDIANS (03/2003)
316	9037	TYPICAL FILL DETAIL AT END OF BRIDGE (09/1999)
317	9100	TRAFFIC CONTROL GENERAL NOTES, STANDARD LEGEND, AND MISCELLANEOUS DETAILS (03/2006)
318	9106	TRAFFIC CONTROL DETAIL FOR LANE CLOSURE ON SIX LANE DIVIDED HIGHWAY (09/2007)
319	9107	TRAFFIC CONTROL DETAILS FOR LANE CLOSURE ON MULTI-LANE UNDIVIDED HIGHWAY (03/2006)
		EROSION CONTROL
320	50-01	EROSION COVER SHEET
321-323	51-01 TO 51-03	BMP GENERAL NOTES SHEET
324	52-01	EC-L1 EROSION CONTROL LEGEND AND UNIFORM CODE SHEET 1 OF 6 (11/ 2007)
325	52-02	EC-L2 EROSION CONTROL LEGEND AND UNIFORM CODE SHEET 2 OF 6 (11/ 2007)
326	52-03	EC-L3 EROSION CONTROL LEGEND AND UNIFORM CODE SHEET 3 OF 6 (11/ 2007)
327	52-04	EC-L4 EROSION CONTROL LEGEND AND UNIFORM CODE SHEET 4 OF 6 (11/ 2007)
328	52-05	EC-L5 EROSION CONTROL LEGEND AND UNIFORM CODE SHEET 5 OF 6 (11/ 2007)
329	52-06	EC-L6 EROSION CONTROL LEGEND AND UNIFORM CODE SHEET 6 OF 6 (11/ 2007)
330	53-01	EROSION CONTROL DRAINAGE AREA MAP
331-360	54-01 TO 54-30	BMP LOCATION DETAILS
361	55-01	WATERSHED MAP SITE MONITORING PLAN
362	56-01	EROSION CONSTRUCTION DETAIL
363	D-07	BERM DITCHES-SIDE DITCHES-SURFACE DITCHES (07/1980)
364	D-20	SILT CONTROL GATES FOR STRUCTURES TYPE L2, 3, : INLET SEDIMENT TRAP (03/2005)
365	D-22	SEDIMENT BASIN TYPE 1 (10/2001)
366	D-24A	TEMPORARY SILT FENCE, BALED STRAW EROSION CHECK, BRUSH BARRIERS (09/2001)
367	D-24B	TYPICAL LOCATION DETAILS FOR SILT FENCES/BALED STRAW (10/2002)
368	D-35	PERMANENT SOIL REINFORCING MAT (08/1988)
369	D-38	EXAMPLES OF DIVERSION CHANNELS (06/1993)
370	D-41	CONSTRUCTION EXIT (02/2001)

CROY ENGINEERING
Engineers Planners Surveyors
200 NORTH COBB PARKWAY, BLDG. 400, SUITE 4L
MARIETTA, GA 30062
PHONE: (770) 971-5407 FAX: (770) 971-0620

REVISION DATES

STATE OF GEORGIA
DEPARTMENT OF TRANSPORTATION
OFFICE: DISTRICT 7

INDEX

BIG SHANTY CONNECTOR
PHASE 1

DRAWING No. 2-02

GPLN

DATE	SHEET NO.	REVISION
10/01/09	28-01 TO 28-04	THE ATMS PLANS HAVE BEEN UPDATED AND QUANTITIES ADJUSTED
10/01/09	02-01	INDEX HAS BEEN UPDATED TO REFLECT CHANGES IN ATMS PLANS
10/01/09	27-00 TO 27-05	SIGNAL PLANS HAVE BEEN UPDATED AS PER COBB COUNTY REQUEST
10/01/09	13-01 & 14-01	SIDEWALKS ON THE EAST SIDE OF BARRETT LAKES BLVD SOUTH OF BIG SHANTY HAVE BEEN WIDENED TO 10 FT
10/01/09	5-05 06-01 09-01	APPROVED PAVING DESIGN HAS BEEN UPDATED THROUGHOUT PLANS
10/01/09	5-07, 23-12	WIDENED SIDEWALK ON THE EAST SIDE OF BARRETT LAKES BLVD SOUTH OF BIG SHANTY
10/01/09	9-02 & 6-05	CHANGED THERMOPLASTIC MARKING QUANTITIES OVER 1 MILE IN LENGTH TO MILES
10/01/09	9-02 & 6-07	MODIFIED EROSION CONTROL QUANTITIES IN SUMMARY OF QUANTITIES AND DETAILED ESTIMATE.
10/01/09	9-01 & 9-02	MOVED APPROACH SLAB FROM BRIDGE ITEMS TO ROADWAY ITEMS
10/01/09	13-01, 13-05	ADDED NOTE STATING "SIDEWALKS IN RADII TO BE 6" THICK"
10/01/09	24-06	CALLED OUT POWER POLE TO BE RELOCATED AND MOVED FIRE HYDRANT
10/01/09	6-06	ADJUSTED ATMS QUANTITIES TO REFLECT CHANGES
10/01/09	53-01	UPDATED DISTURBED AREA
10/14/09	19-01, 19-11, 19-21	REVISED STAGING NOTES TO REFER TO MOST CURRENT VERSION OF AASHTO ROADSIDE DESIGN GUIDE

DATE	SHEET NO.	REVISION

CROY ENGINEERING
Engineers Planners Surveyors
200 NORTH COBB PARKWAY, BLDG. 400, SUITE 413
MARIETTA, GA 30062
PHONE: (770) 971-5407 FAX: (770) 971-0620

REVISION DATES		
10/01/09		

STATE OF GEORGIA
DEPARTMENT OF TRANSPORTATION
OFFICE: DISTRICT 7

REVISION SUMMARY

BIG SHANTY CONNECTOR
PHASE 1

DRAWING No. 3-01

GPLN

1) ALL DRIVEWAYS THAT ARE TO BE RECONSTRUCTED SHALL BE PLACED IN KIND I.E. ASPHALT FOR ASPHALT, CONCRETE FOR CONCRETE, AND ASPHALT FOR DIRT DRIVES. DRIVEWAY RELOCATIONS ARE SHOWN FROM THE BEST AVAILABLE DATA. THE CONTRACTOR SHALL CONSTRUCT NEW DRIVEWAYS TO MATCH THE ACTUAL FIELD LOCATION OF EXISTING DRIVEWAYS OR AS LOCATED IN THE PLANS. RESIDENTIAL DRIVES SHALL BE 14 FEET WIDE AT THE THROAT UNLESS NOTED OTHERWISE IN THE PLANS. COMMERCIAL DRIVES SHALL BE 24 FEET WIDE UNLESS NOTED OTHERWISE IN THE PLANS. THE CONTRACTOR SHALL OBTAIN THE APPROVAL FROM THE ENGINEER PRIOR TO MAKING ANY REVISIONS TO LOCATION, WIDTH, AND/OR NUMBER OF DRIVES TO BE CONSTRUCTED. REQUIRED DRIVEWAY EASEMENTS NOT SHOWN ON THE PLANS SHALL BE ACQUIRED. DRIVES SHALL BE CONSTRUCTED USING:

ASPHALT -	RESIDENTIAL -	ASPH CONC 12.5mm SUPERPAVE (165 LB/SY) GRADED AGGREGATE BASE, 6"
	COMMERCIAL -	ASPH CONC 12.5mm SUPERPAVE (165 LB/SY) ASPH CONC 19mm SUPERPAVE (220 LB/SY) GRADED AGGREGATE BASE, 6"
CONCRETE -	RESIDENTIAL -	DRIVEWAY CONCRETE, 6" THICKNESS
	COMMERCIAL -	DRIVEWAY CONCRETE, 8" THICKNESS

2) A N.O.I. IS REQUIRED FOR THIS PROJECT.

3) THERE IS NO SUITABLE PLACE FOR DISPOSAL OF THE REMOVED SLABS WITHIN THE PROJECT LIMITS. IT SHALL BE THE RESPONSIBILITY OF THE CONTRACTOR TO PROVIDE FOR THE PROPER DISPOSAL AT NO ADDITIONAL COST TO THE DEPARTMENT.

4) ALL EXISTING PIPES THAT WILL NO LONGER BE IN SERVICE SHALL BE FILLED WITH FLOWABLE FILL AND ABANDONED UNLESS OTHERWISE NOTED IN PLANS. PAYMENT SHALL BE INCLUDED IN THE GRADING COMPLETE LUMP SUM.

5) TEMPORARY LANE CLOSURES AND TRAFFIC CHANNELIZATION SHALL COMPLY WITH ALL APPLICABLE GDOT STANDARDS TRAFFIC CONTROL PROCEDURES.

6) THE COST FOR THE REMOVAL OF CURB AND GUTTER SHALL BE INCLUDED IN THE PRICE FOR GRADING COMPLETE.

7) SHORING WILL NOT BE PAID FOR SEPARATELY. SOIL NAIL WALLS CANNOT BE USED AS SHORING ON THE PROJECT.

811 Know what's below Call before you dig

PIPE CULVERT MATERIAL ALTERNATES
FOR PIEDMONT/BLUE RIDGE REGION

TYPE OF PIPE INSTALLATION				CONCRETE	CORRUGATED STEEL AASHTO M-36		CORRUGATED ALUMINUM AASHTO M-196	PLASTIC			
					ALUMINUM COATED (TYPE 2) CORR. STEEL	PLAIN ZINC COATED	PLAIN UNCOATED ALUMINUM	CORR. POLY-ETHYLENE AASHTO M-252	CORR. POLY-ETHYLENE SMOOTHED LINED AASHTO M-294 TYPE "S"	POLY VINYL CHLORIDE (PVC) PROFILE WALL AASHTO M-304	POLY VINYL CHLORIDE (PVC) CORRUGATED SMOOTH INTERIOR WALL ASTM F-949
STORM DRAIN	LONGITUDINAL INTERSTATE AND TRAVEL BEARING			X							
	LONGITUDINAL NON-INTERSTATE AND NON-TRAVEL BEARING			X	X		X		X	X	X
	CROSS DRAIN	GRADE ≤ 10%	ADT < 250	X	X	X	X		X	X	X
			250 < ADT < 1500	X	X*		X		X	X	X
			ADT > 1500	X							
		GRADE > 10%	ADT < 250		X	X	X		X	X	X
			ADT > 250				X		X	X	X
SIDE DRAIN				X	X	X	X		X	X	X
PERMANENT SLOPE DRAIN					X	X	X		X	X	X
PERFORATED UNDERDRAIN					X	X	X	X	X		X

* THIS TYPE PIPE CAN BE USED IF THE ADDITION OF TYPE "B" COATING (AASHTO M-190, HALF BITUMINOUS COATED WITH PAVED INVERT) IS UTILIZED.

NOTE:
1. ALLOWABLE MATERIALS ARE INDICATED BY AN "X".
2. STRUCTURAL REQUIREMENTS OF STORM DRAIN PIPE WILL BE IN ACCORDANCE WITH GEORGIA STANDARD 1030-D OR 1030-P, WHICHEVER IS APPLICABLE, AND THE STANDARD SPECIFICATIONS.
3. GRADED AGGREGATE BACKFILL SHALL BE USED IN CROSS DRAIN APPLICATIONS FOR ALL PLASTIC PIPES (AASHTO M-294, HDPE PIPE; AASHTO M-304, PVC PIPE; ASTM F-949, PVC PIPE).

UTILITY OWNER	SERVICE	CONTACT NUMBERS	CONTACT NAME
ATLANTA GAS LIGHT	GAS	404-584-4184	JASON BROWN
AT & T	PHONE	770-514-3256	FRED BASTANPOUR
COBB EMC	POWER	687-355-3480	JACK SCHULER
COMCAST	CABLE	770-559-2158	JAMES YATES
COBB COUNTY WATER & SEWER	WATER/SEWER	770-419-6343	RUSSELL COOK
COBB-MARIETTA WATER AUTHORITY	WATER	678-414-7018	CHUCK BYRGE
GEORGIA POWER	POWER	404-506-6597	JOHN CLARK
MARIETTA POWER	POWER	770-794-5181	ART MISTALLY

CROY ENGINEERING
Engineers Planners Surveyors
200 NORTH COBB PARKWAY, BLDG. 400, SUITE 413
MARIETTA, GA 30062
PHONE: (770) 971-5407 FAX: (770) 971-0620

REVISION DATES

STATE OF GEORGIA
DEPARTMENT OF TRANSPORTATION
OFFICE: DISTRICT 7

GENERAL NOTES

BIG SHANTY CONNECTOR
PHASE 1

DRAWING No. 4-01

GPLN

			STATE	PROJECT NUMBER	SHEET NO.	TOTAL SHEETS
			GA	CSSTP-0006-00(869)	6	370

GENERAL NOTES - STANDARD SIGNS

1. ALL STANDARD HIGHWAY SIGNS SHALL BE FABRICATED AND ERECTED IN ACCORDANCE WITH THE DETAILS SHOWN IN THE PLANS, THE MANUAL ON UNIFORM TRAFFIC CONTROL DEVICES, CURRENT EDITION, AND THE GEORGIA SPECIFICATIONS, SUPPLEMENTAL SPECIFICATIONS, AND/OR SPECIAL PROVISIONS.

2. SIGN ERECTION STATIONS ARE APPROXIMATE AND MAY BE ADJUSTED TO MEET FIELD CONDITIONS WHERE NECESSARY, BUT SHALL BE WITHIN THE LIMITATIONS SET FORTH IN THE MANUAL ON UNIFORM TRAFFIC CONTROL DEVICES, CURRENT EDITION. NO SIGN LOCATION SHALL BE CHANGED BY THE CONTRACTOR OR BY THE PROJECT ENGINEER WITHOUT PRIOR APPROVAL FROM THE OFFICE OF TRAFFIC SAFETY AND DESIGN.

3. ALL STANDARD HIGHWAY SIGNS SHALL BE ERECTED AT A HEIGHT OF 7 FEET ABOVE THE NORMAL EDGE OF PAVEMENT TO THE BOTTOM OF THE SIGN OR ASSEMBLY.

4a. HORIZONTAL CLEARANCE FOR STANDARD HIGHWAY SIGNS ON INTERSTATE HIGHWAYS SHALL BE 32 FEET FROM THE NORMAL EDGE OF PAVEMENT TO THE NEARER EDGE OF THE SIGN(S), UNLESS SPECIFIED OTHERWISE IN THE PLANS. HORIZONTAL CLEARANCE FOR STANDARD HIGHWAY SIGNS ON RAMPS SHALL BE 2 FEET FROM THE NORMAL EDGE OF PAVED SHOULDER, OR EDGE OF GRADED SHOULDER WHEN PRESENT.

4b. HORIZONTAL CLEARANCE FOR STANDARD HIGHWAY SIGNS ON ALL OTHER ROADWAYS SHALL BE 6 FEET FROM THE EDGE OF THE PAVED SHOULDER OR 12 FEET FROM THE NORMAL EDGE OF PAVEMENT TO THE NEARER EDGE OF THE SIGN(S), WHICHEVER IS GREATER. THE HORIZONTAL CLEARANCE IN NON-MOUNTABLE CURB SECTIONS SHALL BE AT LEAST 2 FEET FROM THE CURB FACE TO THE NEARER EDGE OF THE SIGN(S).

4c. HORIZONTAL CLEARANCE FOR STANDARD HIGHWAY SIGNS MOUNTED BEHIND GUARD RAIL SHALL BE 6 FEET FROM THE FACE OF THE GUARD RAIL TO THE NEARER EDGE OF THE SIGN(S).

5. SINGLE PLATE, HORIZONTAL RECTANGULAR SIGNS OVER 48 INCHES IN WIDTH SHALL BE MOUNTED ON TWO POSTS WITH 2 EACH 2 INCH x $^{1}/_{2}$ INCH x (WIDTH OF SIGN) ALUMINUM OR GALVANIZED STEEL STRAPS. THE STRAPS SHALL BE FLUSH WITH THE BACK OF THE SIGN WITH ONE EACH ACROSS THE TOP AND BOTTOM OF THE SIGN. THE CENTERLINE OF EACH POST SHALL BE INSET 1/6TH OF THE SIGN WIDTH FROM THE EDGE OF THE SIGN. SIGN PLATE BOLT HOLES SHALL BE $^{3}/_{8}$ INCH DIAMETER, DRILLED OR PUNCHED, AS SHOWN ON THE SIGN PLATE DETAILS.

6. EACH 42 OR 48 INCH WIDE x 18 OR 24 INCH HIGH SIGN REQUIRES ONE 2 INCH x $^{1}/_{2}$ INCH x (WIDTH OF SIGN) ALUMINUM OR GALVANIZED STEEL STRAP LOCATED IN THE CENTER OF THE SIGN AND FLUSH WITH THE BACK OF THE SIGN.

7. SIGN ASSEMBLIES SHALL BE MOUNTED ON ALUMINUM OR GALVANIZED STEEL STRAP FRAMES. FOR DETAILS AND STRAP SPECIFICATIONS REFER TO SIGN ASSEMBLY-TYPICAL FRAMING DETAILS.

8. TYPE 3 (ENCAPSULATED LENS) REFLECTIVE SHEETING SHALL BE USED FOR ALL STANDARD HIGHWAY SIGNS REQUIRING REFLECTORIZED BACKGROUNDS EXCEPT AS SPECIFIED BELOW OR SPECIFIED OTHERWISE IN THE PLANS. EITHER CLASS 1 OR CLASS 2 ADHESIVE BACKING IS PERMISSIBLE.

9. TYPE 9 (VERY HIGH INTENSITY) REFLECTIVE SHEETING SHALL BE USED FOR ALL RED SERIES SIGNS (R1-1, R1-2, R1-3A, R1-4A, R5-1, R5-1A).

10. TYPE 9 (VERY HIGH INTENSITY) FLUORESCENT YELLOW GREEN REFLECTIVE SHEETING SHALL BE USED FOR SCHOOL ZONE (S1-1, S2-1, S3-1, S4-3, AND THE TOP PORTION OF THE S5-1) SIGNS, BICYCLE CROSSING (W11-1) SIGNS, AND PEDESTRIAN CROSSING (W11-2 AND W11A-2) SIGNS. SIGNS WITHIN THE SAME ASSEMBLY AS THE SCHOOL ZONE SIGNS SPECIFICALLY LISTED ABOVE AND ALL REGULATORY SIGNS PLACED AS PART OF THE SCHOOL ZONE SIGNING SHALL HAVE TYPE IX (VERY HIGH INTENSITY) REFLECTIVE SHEETING BACKGROUNDS OF THE APPROPRIATE COLOR.

11. TYPE 9 (VERY HIGH INTENSITY) FLUORESCENT YELLOW REFLECTIVE SHEETING SHALL BE USED FOR ALL WARNING SIGNS.

12. A $^{1}/_{2}$ INCH MINIMUM AIR SPACE SHALL BE REQUIRED BETWEEN ALL SIGN PLATES WITHIN AN ASSEMBLY.

13. WHERE SIGNS WITHIN AN ASSEMBLY EXTEND BELOW THE STANDARD MOUNTING HOLES ON THE POST(S), ADDITIONAL $^{3}/_{8}$ INCH DIAMETER HOLE(S), DRILLED OR PUNCHED, SHALL BE REQUIRED TO PROPERLY MOUNT THE ASSEMBLY.

14. INTERSTATE SHIELDS SHALL CONTAIN THE WORD GEORGIA. ALL INTERSTATE, U.S., AND GEORGIA SHIELDS REQUIRING ALT, BUS, CONN, LOOP, OR SPUR SHALL USE 4 INCH SERIES "D" LETTERS. REFER TO THE MANUAL ON UNIFORM TRAFFIC CONTROL DEVICES, CURRENT EDITION, FOR DETAILS.

15. FOR DETAILS OF SPECIAL DESIGN HIGHWAY SIGNS, SEE DETAILS OF MISCELLANEOUS SIGNS.

16. REFER TO PLAN SHEETS FOR LOCATION OF THE DISTRICT ENGINEERS' OFFICE TO BE SHOWN ON ALL R552-1 (LIMITED ACCESS) SIGNS IN THIS PROJECT, IF ANY.

17. THE CONTRACTOR WILL, AS REQUESTED BY THE DISTRICT TRAFFIC OPERATIONS ENGINEER, BE REQUIRED TO REMOVE ANY EXISTING SIGNS THAT ARE DUPLICATED OR ARE CONTRARY TO THESE SIGN PLANS.

CROY ENGINEERING
Engineers Planners Surveyors
200 NORTH COBB PARKWAY, BLDG. 400, SUITE 413
MARIETTA, GA 30062
PHONE: (770) 971-5407 FAX: (770) 971-0620

- NO SCALE -

DATE	REVISIONS

STATE OF GEORGIA
DEPARTMENT OF TRANSPORTATION
OFFICE: TRAFFIC SAFETY & DESIGN
GENERAL NOTES

T03
STANDARD SIGNS
GENERAL NOTES
JULY 2002
NUMBER 4-02

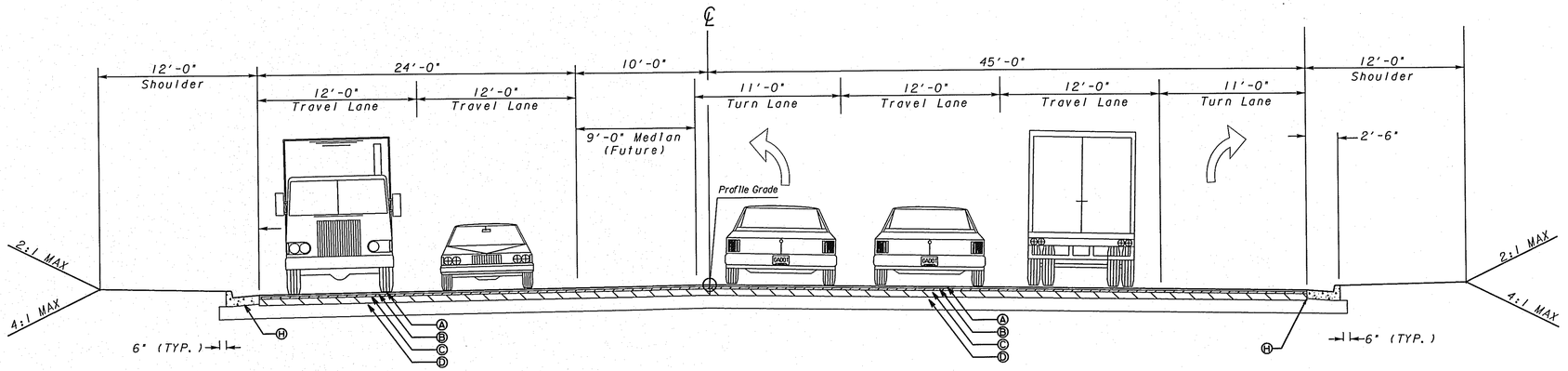

TYPICAL SECTION #1

BIG SHANTY CONNECTOR
STA. 51+26.50 TO STA. 51+70.62
PAVEMENT CROSS-SLOPE TO MATCH PROFILE OF BARRETT LAKES BLVD
*FOR BIG SHANTY CONNECTOR 51+70.62 TO 52+38.72 SEE BARRET LAKES BLVD TYPICAL SECTIONS

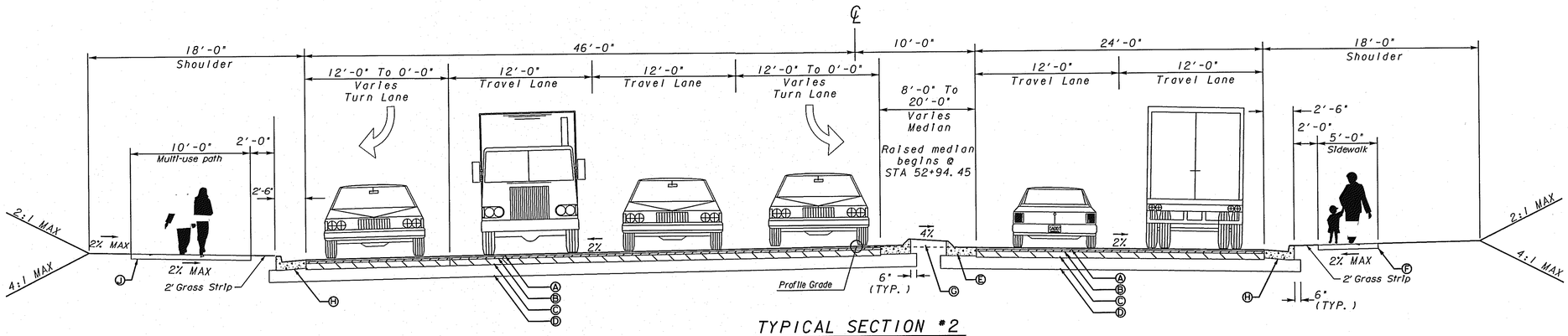

TYPICAL SECTION #2

BIG SHANTY CONNECTOR
STA. 52+38.72 TO STA. 57+48.50
SEE TYPICAL SECTION #8 FOR SHOULDER PAVING UNDERNEATH I-75 SOUTH BOUND BRIDGE

SLOPE TABLE		
SLOPE	BACKSLOPE•• CUT	FILL
4:1	———	0 - 10 FT.
2:1	ALL	OVER 6 FT.•
• GUARDRAIL REQUIRED •• FORESLOPE 4:1, ALL CONDITIONS		

REQUIRED PAVEMENT
- (A) RECYC. ASPH. CONCR. 12.5mm SUPERPAVE, 165LB/SY
- (B) RECYC. ASPH. CONCR. 19mm SUPERPAVE, 220LB/SY
- (C) RECYC. ASPH. CONCR. 25mm SUPERPAVE, 440LB/SY
- (D) GRADED AGGREGATE BASE, 12"
- (E) 8"x30"CONC. CURB & GUTTER, GA. STD. 9032 B. TYPE 7
- (F) 4"x5'CONC. SIDEWALK, GA. CONSTR. DET. A-3
- (G) RED STAMPED CONCRETE MEDIAN / GRASS MEDIAN (TYP)
- (H) 8"x30"CONC. CURB & GUTTER, GA. STD. 9032 B. TYPE 2
- (I) GRASS MEDIAN
- (J) 6"X10' CONCRETE MULTI-USE PATH

NOTE: COLORED STAMPED MEDIAN SHALL HAVE THE FOLLOWING COLOR: FEDERAL COLOR CODE #30045 (BROWN) OR APPROVED EQUIVALENT.

CROY ENGINEERING
Engineers Planners Surveyors
200 NORTH COBB PARKWAY, BLDG. 400, SUITE 413
MARIETTA, GA 30062
PHONE: (770) 971-5407 FAX: (770) 971-0620

NOT TO SCALE

REVISION DATES

STATE OF GEORGIA
DEPARTMENT OF TRANSPORTATION
OFFICE: DISTRICT 7

TYPICAL SECTIONS

BIG SHANTY CONNECTOR
PHASE 1

DRAWING No. 5-01

GPLN

10/15/2009	10:09:20 AM	PRF	y:\0313 big shanty conn\design\006869 phase 1\dgn\006869ty02.dgn	STATE	PROJECT NUMBER	SHEET NO.	TOTAL SHEETS
USER:dwebb		$$PENTABLE$$		GA	CSSTP-0006-00(869)	8	370

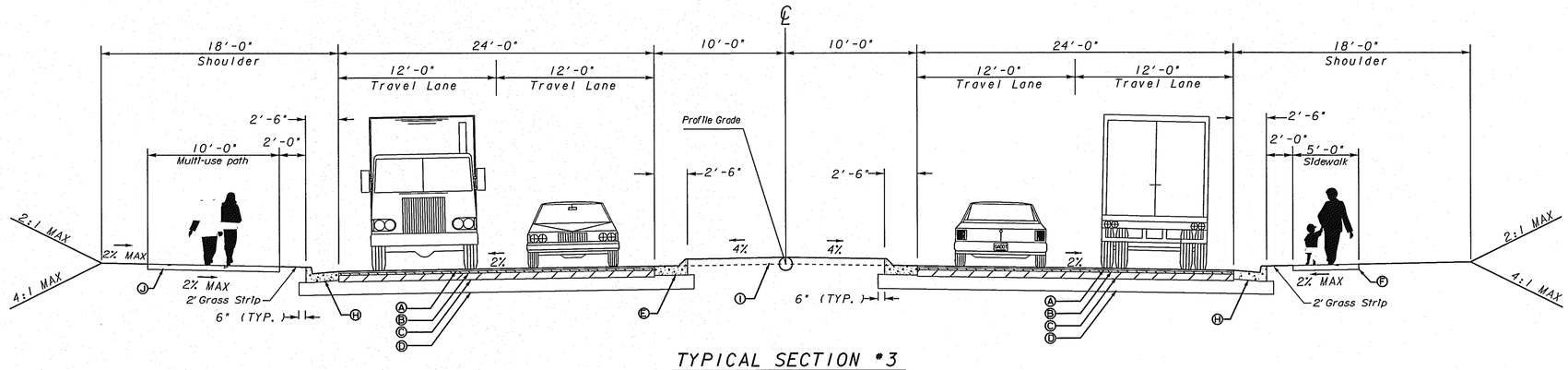

TYPICAL SECTION #3

BIG SHANTY CONNECTOR
STA. 57+48.50 TO STA. 59+11.26
STA. 59+79.34 TO STA. 63+76.42

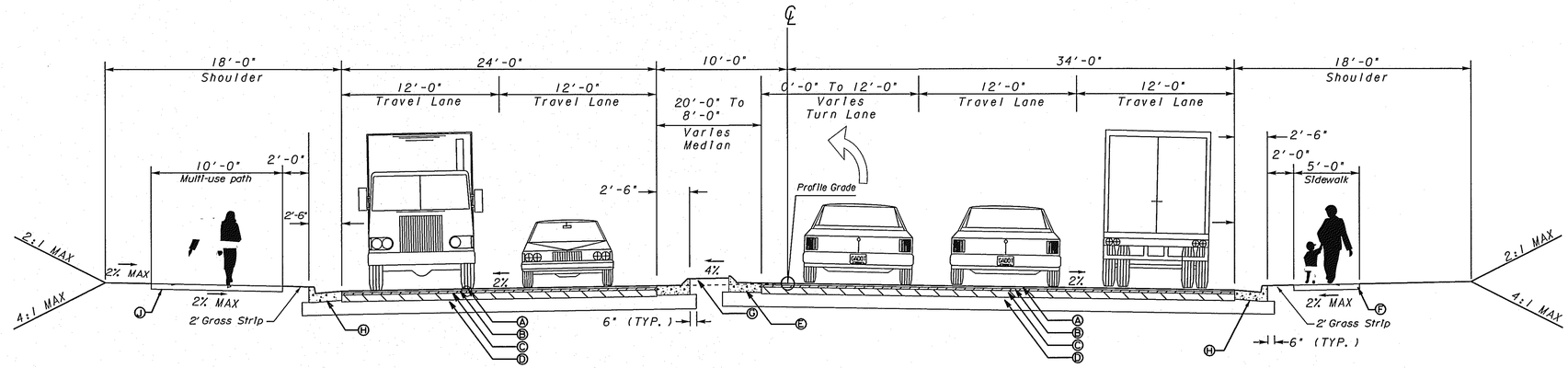

TYPICAL SECTION #4

BIG SHANTY CONNECTOR
STA. 63+76.42 TO STA. 67+26.33

SLOPE TABLE		
SLOPE	BACKSLOPE•• CUT	FILL
4:1	———	0 - 10 FT.
2:1	ALL	OVER 6 FT.•
• GUARDRAIL REQUIRED •• FORESLOPE 4:1, ALL CONDITIONS		

REQUIRED PAVEMENT

- (A) RECYC. ASPH. CONCR. 12.5mm SUPERPAVE. 165LB/SY
- (B) RECYC. ASPH. CONCR. 19mm SUPERPAVE. 220LB/SY
- (C) RECYC. ASPH. CONCR. 25mm SUPERPAVE. 440LB/SY
- (D) GRADED AGGREGATE BASE. 12"
- (E) 8"x30"CONC. CURB & GUTTER, GA. STD. 9032 B. TYPE 7
- (F) 4"x5'CONC. SIDEWALK, GA. CONSTR. DET. A-3
- (G) RED STAMPED CONCRETE MEDIAN / GRASS MEDIAN (TYP)
- (H) 8"x30"CONC. CURB & GUTTER, GA. STD. 9032 B. TYPE 2
- (I) GRASS MEDIAN
- (J) 6"X10' CONCRETE MULTI-USE PATH

NOTE: COLORED STAMPED MEDIAN SHALL HAVE THE FOLLOWING COLOR: FEDERAL COLOR CODE #30045 (BROWN) OR APPROVED EQUIVALENT.

CROY ENGINEERING
Engineers Planners Surveyors
200 NORTH COBB PARKWAY, BLDG. 400, SUITE 413
MARIETTA, GA 30062
PHONE: (770) 971-5407 FAX: (770) 971-0620

NOT TO SCALE

REVISION DATES

STATE OF GEORGIA
DEPARTMENT OF TRANSPORTATION
OFFICE: DISTRICT 7

TYPICAL SECTIONS

BIG SHANTY CONNECTOR
PHASE 1

DRAWING No. 5-02

GPLN

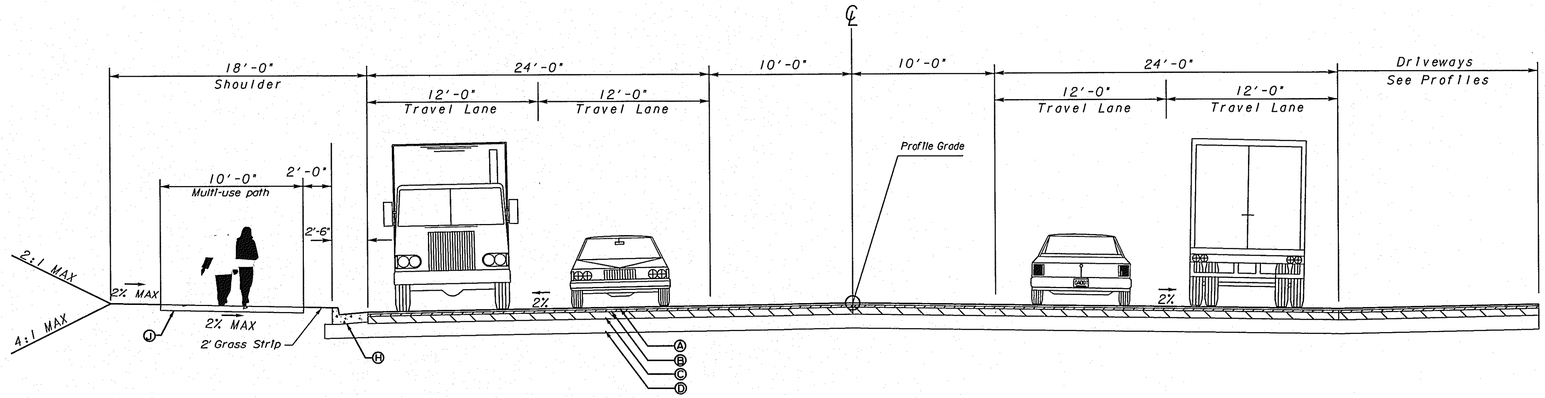

TYPICAL SECTION #5
BIG SHANTY CONNECTOR
(MEDIAN CROSS OVER)
STA. 67+26.33 TO STA. 68+21.52

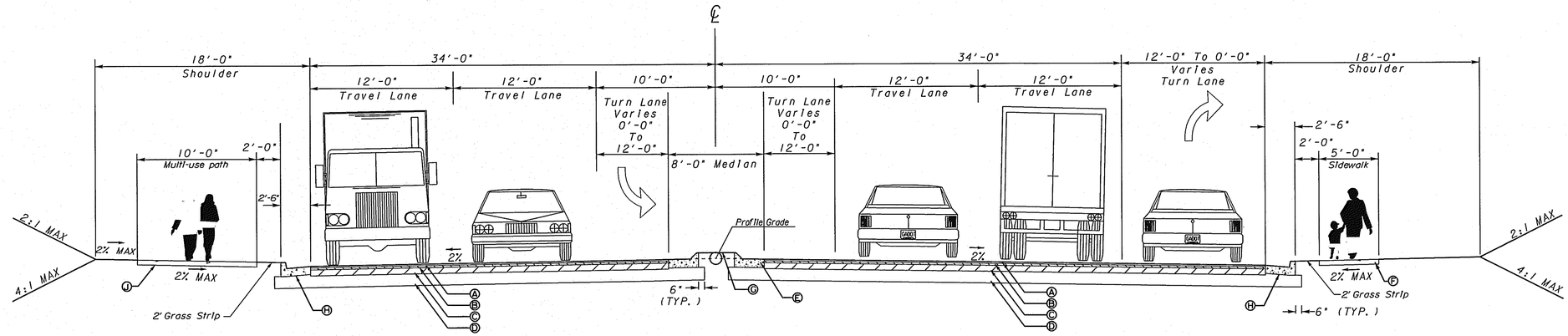

TYPICAL SECTION #6
BIG SHANTY CONNECTOR
STA. 68+21.52 TO STA. 71+71.52

SLOPE TABLE		
SLOPE	BACKSLOPE•• CUT	FILL
4:1	———	0 - 10 FT.
2:1	ALL	OVER 6 FT.•
• GUARDRAIL REQUIRED •• FORESLOPE 4:1, ALL CONDITIONS		

REQUIRED PAVEMENT
- Ⓐ RECYC. ASPH. CONCR. 12.5mm SUPERPAVE, 165LB/SY
- Ⓑ RECYC. ASPH. CONCR. 19mm SUPERPAVE, 220LB/SY
- Ⓒ RECYC. ASPH. CONCR. 25mm SUPERPAVE, 440LB/SY
- Ⓓ GRADED AGGREGATE BASE, 16"
- Ⓔ 8"x30"CONC. CURB & GUTTER, GA. STD. 9032 B. TYPE 7
- Ⓕ 4'x5'CONC. SIDEWALK, GA. CONSTR. DET. A-3
- Ⓖ RED STAMPED CONCRETE MEDIAN / GRASS MEDIAN (TYP)
- Ⓗ 8"x30"CONC. CURB & GUTTER, GA. STD. 9032 B. TYPE 2
- Ⓘ GRASS MEDIAN
- Ⓙ 6"X10' CONCRETE MULTI-USE PATH

NOTE: COLORED STAMPED MEDIAN SHALL HAVE THE FOLLOWING COLOR: FEDERAL COLOR CODE #30045 (BROWN) OR APPROVED EQUIVALENT.

CROY ENGINEERING
Engineers Planners Surveyors
200 NORTH COBB PARKWAY, BLDG. 400, SUITE 413
MARIETTA, GA 30062
PHONE: (770) 971-5407 FAX: (770) 971-0620

NOT TO SCALE

REVISION DATES

STATE OF GEORGIA
DEPARTMENT OF TRANSPORTATION
OFFICE: DISTRICT 7

TYPICAL SECTIONS

BIG SHANTY CONNECTOR
PHASE 1

DRAWING No. 5-03

GPLN

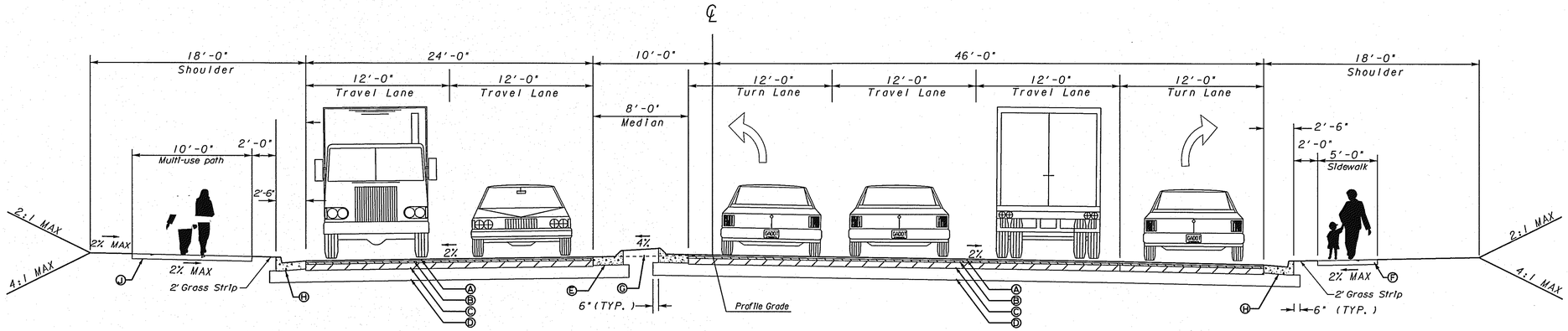

TYPICAL SECTION #7
BIG SHANTY CONNECTOR
STA. 71+71.52 TO STA. 74+86.86

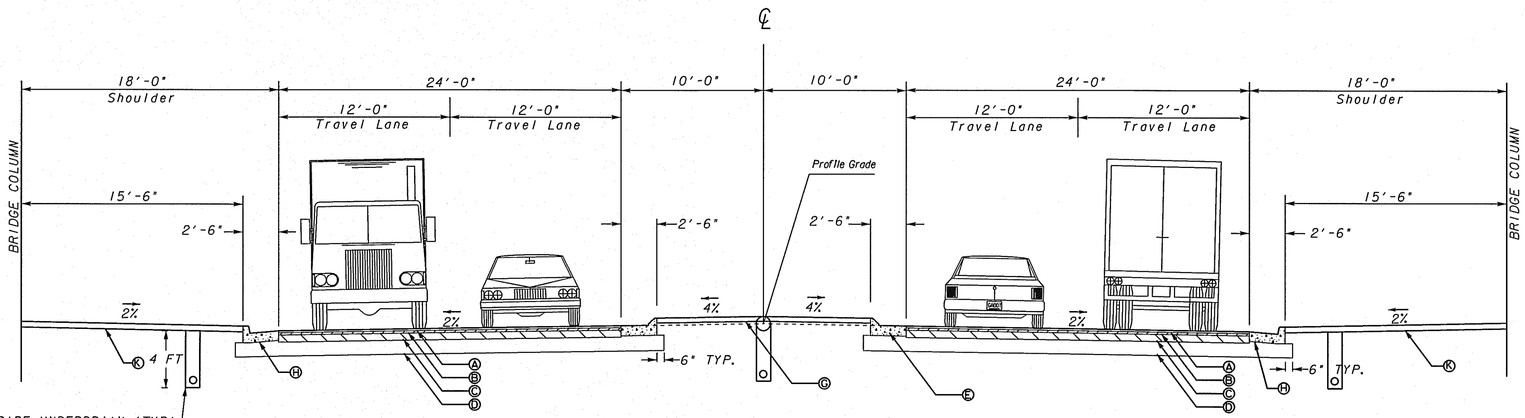

6" PERFORATED PIPE UNDERDRAIN (TYP)

APPLIES TO STA 52+50 +/- TO STA 60+50 +/- LEFT AND RIGHT

TYPICAL SECTION #8
BIG SHANTY CONNECTOR
AREA UNDER BRIDGE-SEE PLAN SHEET
STA 59+11.26 TO STA 59+79.34

UNDERDRAIN GENERAL NOTES:

1) PERFORATED UNDERDRAIN TO BE PLACED 4.0 FT ACCORDANCE WITH GDOT STANDARD 9029B.

2) PIPES SHALL BE TIED INTO CROSS DRAIN PIPES.

3) UNDERDRAINS SHALL BE INSTALLED AT THE DIRECTION OFTHE ENGINEER.

4) WHERE UNDERDRAINS WILL BE INSTALLED IN CONJUNCTION WITH SLOPE DRAINS, SLOPE DRAINS SHALL BE PLACED A SUFFICIENT DISTANCE ABOVE THE UNDERDRAIN AS NOT TO INTERFERE WITH UNDERDRAIN INSTALLATION.

NOTE: COLORED STAMPED MEDIAN SHALL HAVE THE FOLLOWING COLOR: FEDERAL COLOR CODE *30045 (BROWN) OR APPROVED EQUIVALENT.

SLOPE TABLE		
SLOPE	BACKSLOPE•• CUT	FILL
4:1	———	0 - 10 FT.
2:1	ALL	OVER 6 FT.•
• GUARDRAIL REQUIRED •• FORESLOPE 4:1, ALL CONDITIONS		

REQUIRED PAVEMENT

(A) RECYC. ASPH. CONCR. 12.5mm SUPERPAVE, 165LB/SY
(B) RECYC. ASPH. CONCR. 19mm SUPERPAVE, 220LB/SY
(C) RECYC. ASPH. CONCR. 25mm SUPERPAVE, 440LB/SY
(D) GRADED AGGREGATE BASE, 12"
(E) 8"x30"CONC. CURB & GUTTER, GA. STD. 9032 B. TYPE 7
(F) 4"x5'CONC. SIDEWALK, GA. CONSTR. DET. A-3
(G) RED STAMPED CONCRETE MEDIAN / GRASS MEDIAN (TYP)
(H) 8"x30"CONC. CURB & GUTTER, GA. STD. 9032 B. TYPE 2
(J) GRASS MEDIAN
(J) 6"X10' CONCRETE MULTI-USE PATH
(K) 4" CONCRETE PAVING

CROY ENGINEERING
Engineers Planners Surveyors
200 NORTH COBB PARKWAY, BLDG. 400, SUITE 413
MARIETTA, GA 30062
PHONE: (770) 971-5407 FAX: (770) 971-0620

NOT TO SCALE

REVISION DATES

STATE OF GEORGIA
DEPARTMENT OF TRANSPORTATION
OFFICE: DISTRICT 7

TYPICAL SECTIONS

BIG SHANTY CONNECTOR
PHASE 1

DRAWING No. 5-04

GPLN

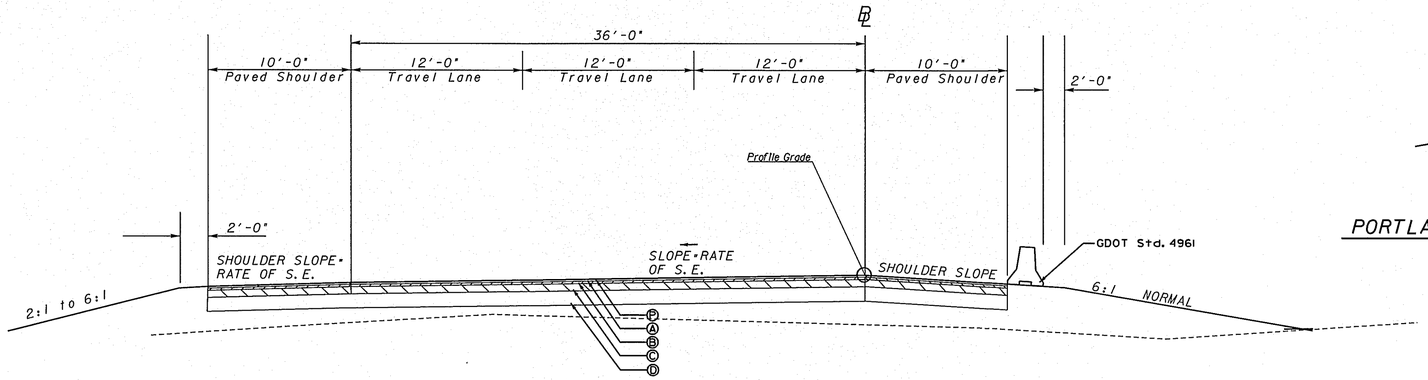

TYPICAL SECTION *9
I-75 SB DETOUR
STA 0+00 TO 30+10.37

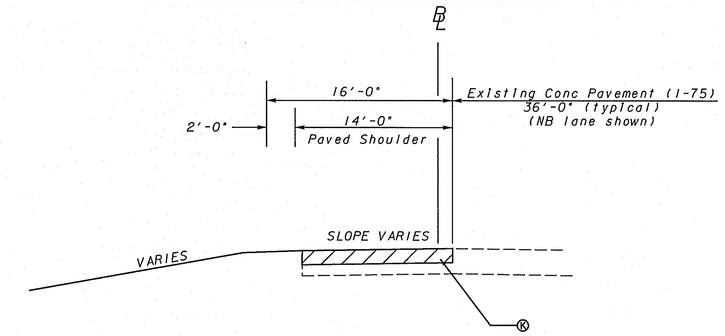

PORTLAND CEMENT CONCRETE SHOULDER REPLACEMENT DETAIL
I-75 SB AND NB SHOULDER REPLACEMENT
STA 2+00 TO STA 6+50
STA 126+50 TO 132+45.50

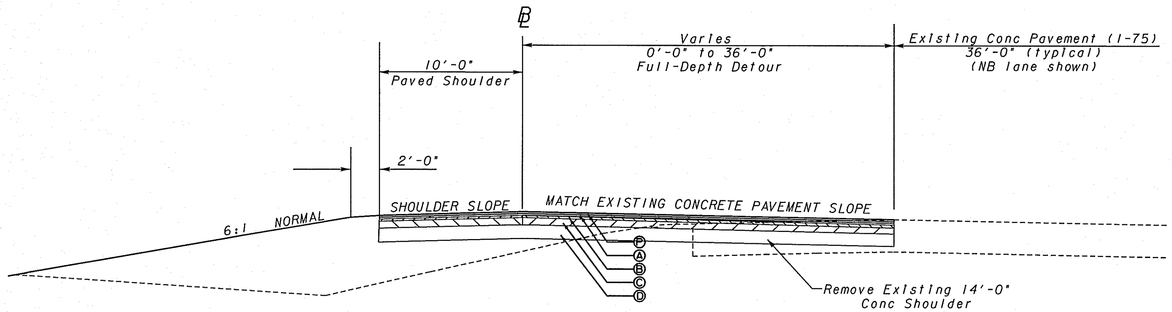

DETOUR TRANSITION DETAIL
I-75 SB AND NB DETOUR TRANSITION
STA 2+00 TO STA 6+50
STA 126+50 TO 132+45.50

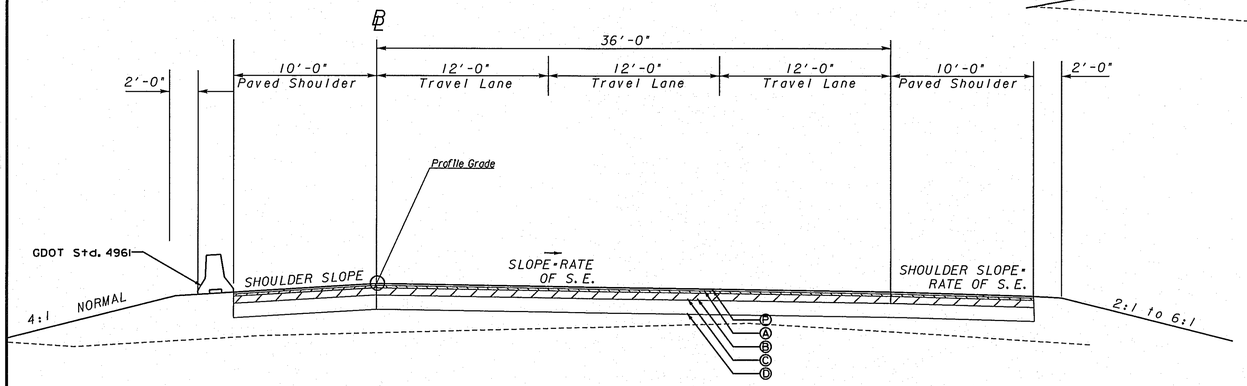

TYPICAL SECTION *10
I-75 NB DETOUR
STA 100+00 TO STA 132+41.82

SLOPE TABLE		
SLOPE	BACKSLOPE•• CUT	FILL
4:1	———	0 - 10 FT.
2:1	ALL	OVER 6 FT.•

• GUARDRAIL REQUIRED
•• FORESLOPE 4:1, ALL CONDITIONS

REQUIRED PAVEMENT
- (A) ASPH. CONC. 12.5mm SUPERPAVE POLY-MOD. 165LB/SY
- (B) RECYC. ASPH. CONCR. 19mm SUPERPAVE, 220LB/SY
- (C) RECYC. ASPH. CONCR. 25mm SUPERPAVE, 440LB/SY
- (D) GRADED AGGREGATE BASE, 12"
- (K) PLAIN PORTLAND CEMENT PVMT. CLASS HES CONCRETE, 12" THICK. (REMOVE DURING DETOUR CONST. AND REPLACE AFTER DETOUR)
- (P) 12.5mm OGFC, 135LBS/SY
- (N) RECYC. ASPH. CONC. FOR LEVELING

CROY ENGINEERING
Engineers Planners Surveyors
200 NORTH COBB PARKWAY, BLDG. 400, SUITE 413
MARIETTA, GA 30062
PHONE: (770) 971-5407 FAX: (770) 971-0820

NOT TO SCALE

REVISION DATES		
10/01/09		

STATE OF GEORGIA
DEPARTMENT OF TRANSPORTATION
OFFICE: DISTRICT 7

TYPICAL SECTIONS

BIG SHANTY CONNECTOR
PHASE 1

DRAWING No. 5-05

GPLN

10/15/2009 10:09:25 AM	PRF	y:\0313 big shanty conn\design\006869 phase 1\dgn\006869ty06.dgn	STATE	PROJECT NUMBER	SHEET NO.	TOTAL SHEETS
USER:dwebb	$$PENTABLE$$		GA	CSSTP-0006-00(869)	12	370

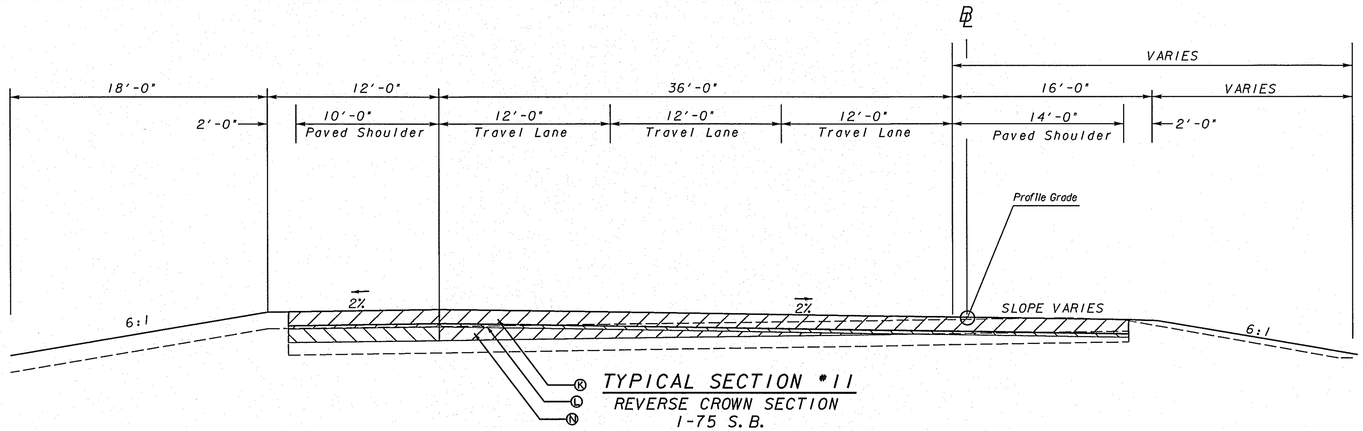

TYPICAL SECTION #11

REVERSE CROWN SECTION
I-75 S. B.
STA 26+00 TO STA 30+66
STA 33+64 TO STA 35+00

REMOVE EXISTING 12 INCH PLAIN PORTLAND CEMENT CONCRETE,
ADD 19 MM SUPERPAVE ASPHALTIC CONCRETE TO ACHEIVE A +2% CROSS SLOPE
REPLACE EXISTING CONCRETE PAVING WITH 12 INCHES OF NEW PORTLAND CEMENT CONCRETE
WITH 1½INCH DOWELS AND JOINTS AT 15 FT INTERVALS

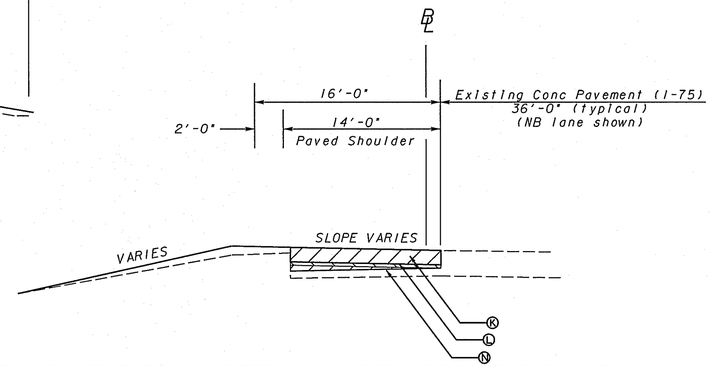

PORTLAND CEMENT CONCRETE SHOULDER REPLACEMENT DETAIL

I-75 NB SHOULDER REPLACEMENT
STA 130+00 TO STA 130+71.41
STA 134+34.08 TO STA 135+00

REMOVE EXISTING 12 INCH PLAIN PORTLAND CEMENT CONCRETE,
USE LEVELING ASPHALTIC CONCRETE TO TRANSITION CROSS SLOPE TO MATCH APPROACH SLAB
REPLACE EXISTING CONCRETE PAVING WITH 12 INCHES OF NEW PORTLAND CEMENT CONCRETE
WITH 1½INCH DOWELS AND JOINTS AT 15 FT INTERVALS

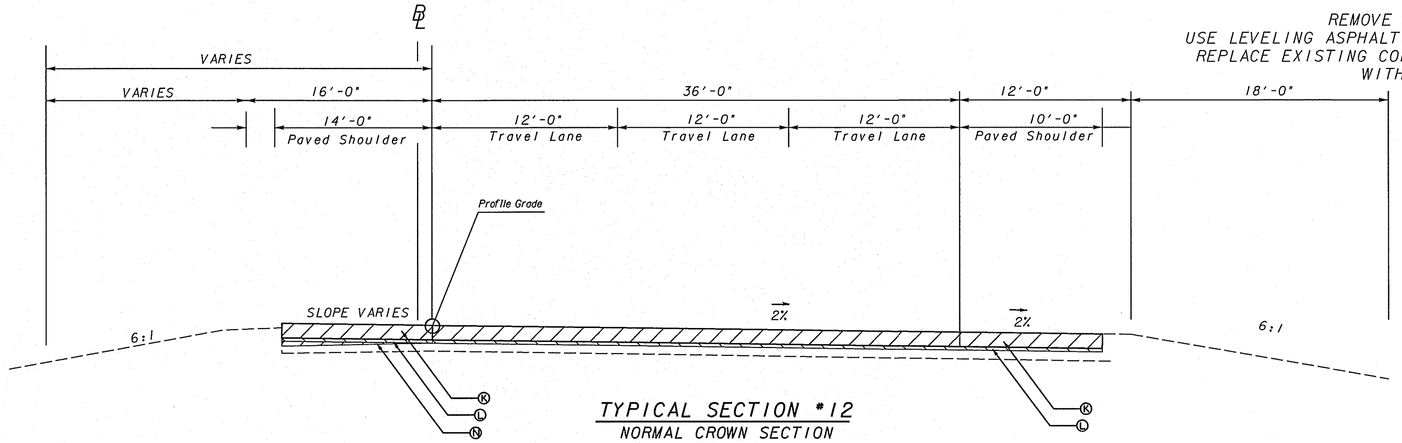

TYPICAL SECTION #12

NORMAL CROWN SECTION
I-75 N. B.
FOR INSIDE SHOULDER: STA 130+00.00 TO STA 131+21.41 AND STA 133+84.08 TO STA 135+00.00
FOR TRAVEL LANE AND OUTSIDE SHOULDER: STA 130+71.41 TO STA 131+21.41 AND STA 133+84.08 TO 134+34.08

REMOVE EXISTING 12 INCH PLAIN PORTLAND CEMENT CONCRETE,
USE LEVELING ASPHALTIC CONCRETE TO TRANSITION INSIDE SHOULDER CROSS SLOPE TO MATCH APPROACH SLAB
REPLACE EXISTING CONCRETE PAVING WITH 12 INCHES OF NEW PORTLAND CEMENT CONCRETE
WITH 1½INCH DOWELS AND JOINTS AT 15 FT INTERVALS

SLOPE TABLE		
SLOPE	BACKSLOPE•• CUT	FILL
4:1	———	0 - 10 FT.
2:1	ALL	OVER 6 FT.•
• GUARDRAIL REQUIRED •• FORESLOPE 4:1, ALL CONDITIONS		

REQUIRED PAVEMENT

(I) GRASS MEDIAN
(K) PLAIN PORTLAND CEMENT PVMT. CLASS HES CONCRETE. 12" THICK. (REMOVE DURING DETOUR CONST. AND REPLACE AFTER DETOUR)
(L) RECYC. ASPH. CONCR. 19mm SUPERPAVE, 330LB/SY (REMOVE DURING DETOUR CONST. AND REPLACE AFTER DETOUR)
(N) RECYC. ASPH. CONC. FOR LEVELING

CROY ENGINEERING
Engineers Planners Surveyors
200 NORTH COBB PARKWAY, BLDG. 400, SUITE 413
MARIETTA, GA 30062
PHONE: (770) 971-5407 FAX: (770) 971-0620

NOT TO SCALE

REVISION DATES		

STATE OF GEORGIA
DEPARTMENT OF TRANSPORTATION
OFFICE: DISTRICT 7

TYPICAL SECTIONS

BIG SHANTY CONNECTOR
PHASE I

DRAWING No. 5-06

GPLN

10/15/2009	10:09:26 AM	PRF	y:\0313 big shanty conn\design\006869 phase 1\dgn\006869ty07.dgn	STATE	PROJECT NUMBER	SHEET NO.	TOTAL SHEETS
USER:dwebb		$$PENTABLE$$		GA	CSSTP-0006-00(869)	13	370

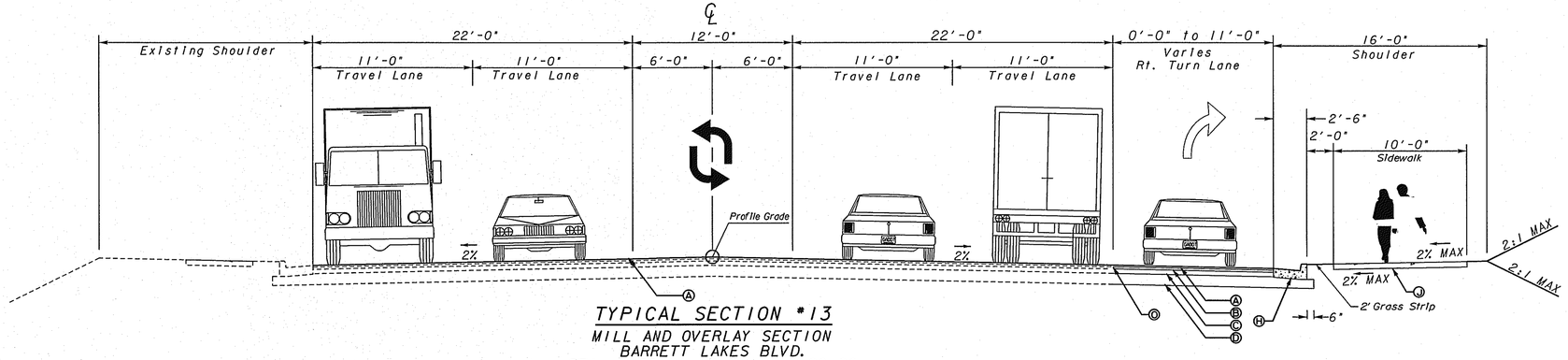

TYPICAL SECTION #13

MILL AND OVERLAY SECTION
BARRETT LAKES BLVD.
STA. 5+69.21 TO STA. 10+00.00

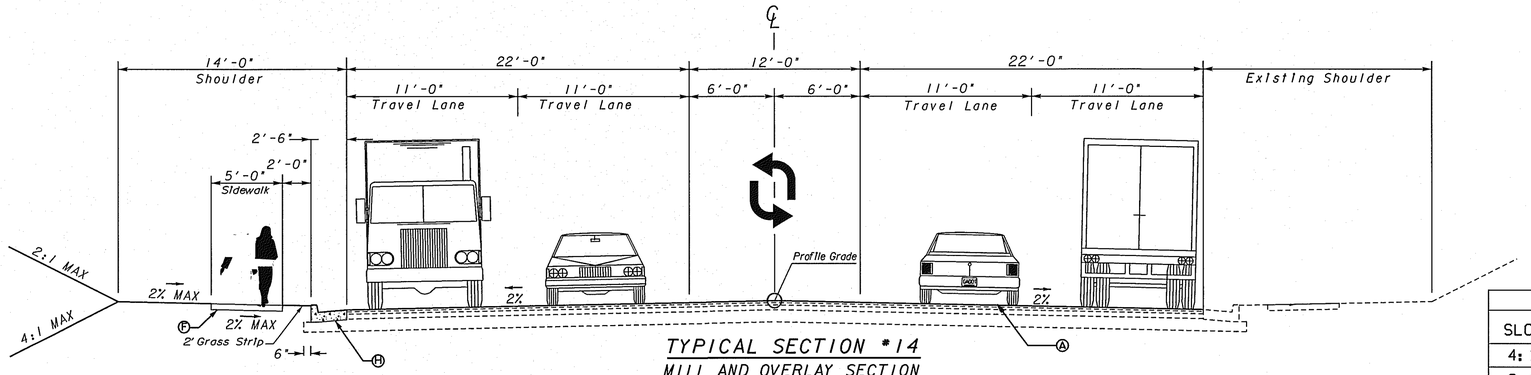

TYPICAL SECTION #14

MILL AND OVERLAY SECTION
BARRETT LAKES BLVD.
STA. 10+00.00 TO STA. 12+80.01

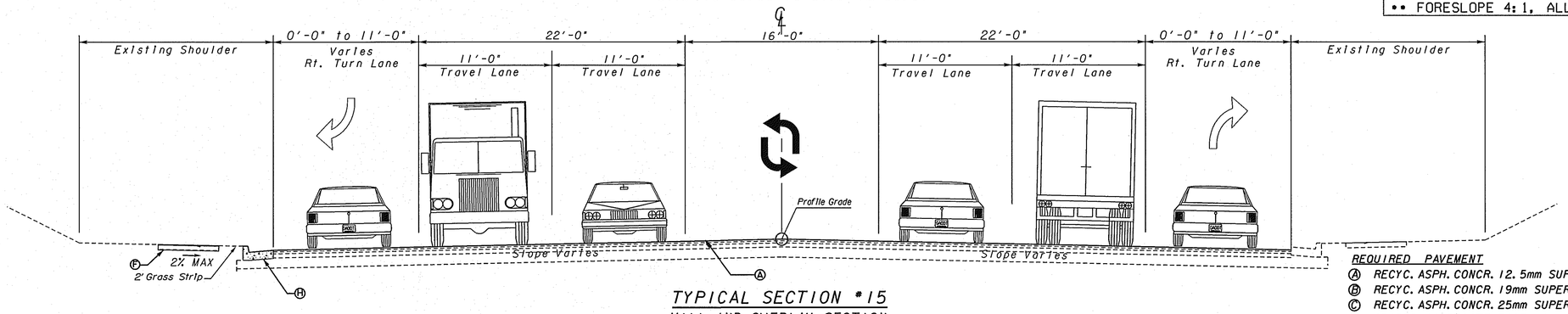

TYPICAL SECTION #15

MILL AND OVERLAY SECTION
GEORGE BUSBEE PARKWAY
STA. 8+99.84 TO STA. 11+19.00

SLOPE TABLE		
SLOPE	BACKSLOPE•• CUT	FILL
4:1	———	0 - 10 FT.
2:1	ALL	OVER 6 FT.•

• GUARDRAIL REQUIRED
•• FORESLOPE 4:1, ALL CONDITIONS

REQUIRED PAVEMENT

- (A) RECYC. ASPH. CONCR. 12.5mm SUPERPAVE, 165LB/SY
- (B) RECYC. ASPH. CONCR. 19mm SUPERPAVE, 220LB/SY
- (C) RECYC. ASPH. CONCR. 25mm SUPERPAVE, 440LB/SY
- (D) GRADED AGGREGATE BASE, 10"
- (F) 4"x5' CONC. SIDEWALK, GA. CONSTR. DET. A-3
- (H) 8"x30" CONC. CURB & GUTTER, GA. STD. 9032 B. TYPE 2
- (J) 6"X10' CONCRETE MULTI-USE PATH
- (O) PAVEMENT WIDENING FABRIC

CROY ENGINEERING
Engineers Planners Surveyors
200 NORTH COBB PARKWAY, BLDG. 400, SUITE 413
MARIETTA, GA 30062
PHONE: (770) 971-5407 FAX: (770) 971-0620

NOT TO SCALE

REVISION DATES		
10/01/09		

STATE OF GEORGIA
DEPARTMENT OF TRANSPORTATION
OFFICE: DISTRICT 7

TYPICAL SECTIONS

BIG SHANTY CONNECTOR
PHASE 1

DRAWING No. 5-07

GPLN

BENCHING DETAIL

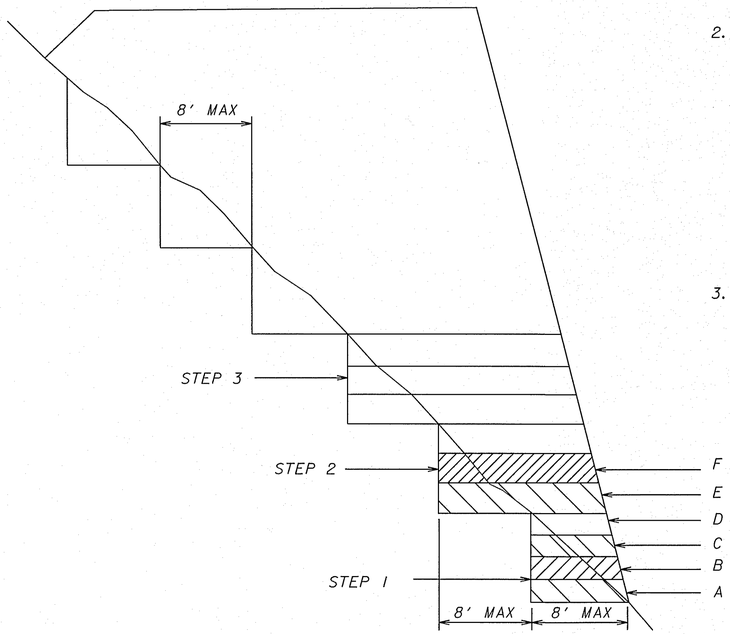

1. WHERE THE EMBANKMENT IS TO BE PLACED ON A HILLSIDE OR ANOTHER EXISTING EMBANKMENT HAVING A SLOPE OF 3 TO 1 OR STEEPER. THE FOUNDATION MUST BE BENCHED WHILE THE EMBANKMENT IS BEING MADE. (SEE DIAGRAM AT LEFT)

2. THE DIAGRAM SHOWS THAT BEFORE LAYER "A" IS PLACED THE FIRST STEP (1) IS CUT INTO THE SLOPE A MAXIMUM DISTANCE OF ABOUT 8' (ABOUT 3/4 THE WIDTH OF THE USUAL D-8 BULLDOZER BLADE). SUCCESSIVE LAYERS B, C, AND D ARE THEN PLACED. BEFORE LAYER "E" IS PLACED, THE SECOND STEP IS CUT 8' INTO THE SLOPE AND SUCCESSIVE LAYERS ARE AGAIN PLACED. IF IT IS ANTICIPATED THAT THE VERTICAL PART OF THE STEP WILL EXCEED 4' IF AN 8' HORIZONTAL CUT IS MADE, THEN THE ACTUAL CUT STOPS WHEN THE VERTICAL PART REACHED A MAXIMUM OF 4' ALLOWING THE HORIZONTAL DISTANCE TO VARY.

3. THE PROCESS OF BENCHING IS CONSIDERED INCIDENTAL TO THE ITEM OF UNCLASSIFIED EXCAVATION AND BORROW IN CONSTRUCTION OF THE EMBANKMENT AND NO ADDITIONAL MEASUREMENT OF QUANTITY OR PAYMENT WILL BE MADE FOR BENCHING.

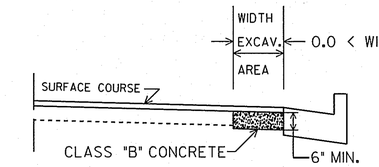

NO SCALE
CLASS "B" CONCRETE BASE OR PAVEMENT WIDENING
Item Code 500-9999 - Cu. Yds.

In excavated areas between the existing paving and new curb and gutter that are 5'-0" or less in width, Class "B" concrete shall be placed in lieu of the base and paving specified by the typical section. Payment will be made under "Class B Concrete Base and Pavement Widening".

In excavated areas greater than 5'-0" in width, the Contractor shall place base and paving as specified on the typical section.

See plans for details of curb and gutter construction.

CLASS "B" CONCRETE BASE OR WIDENING DETAIL

ALLOWABLE RANGES TABLE

FOR THIS PROJECT, CROSS SLOPES THAT ARE ADJUSTED TO "BEST FIT" EXISTING PAVEMENT SLOPES ARE SUBJECT TO THE FOLLOWING LIMITS:

A. NORMAL CROWN

SECTION WITH GRADES 0.5% OR GREATER	SECTION WITH GRADES LESS THAN 0.5%
0.0150 FT/FT - MINIMUM	0.0156 FT/FT - MINIMUM
0.0208 FT/FT - DESIRABLE	0.0208 FT/FT - DESIRABLE
0.0250 FT/FT - MAXIMUM	0.0300 FT/FT - MAXIMUM

B. SUPERELEVATION RATE

S.E. RATE SHOWN ON PLANS OR SE RATE EXISTING IN FIELD, WHICHEVER IS GREATER.

C. SUPERELEVATION TRANSITION LENGTH (LENGTH FROM FLAT POINT TO FULL SE)

	RATE OF CHANGE	CORRESPONDING DIFFERENCE IN GRADE BETWEEN PIVOT POINT AND EDGE OF PAVEMENT
MINIMUM	1:150	0.67%
DESIRABLE	1:200	0.50%
MAXIMUM	1:300	0.33%

LENGTH SHALL BE SET TO AVOID CREATING A FLAT GUTTER GRADE ON LOW SIDE AND TO AVOID FLAT CROSS SLOPES AT OR NEAR THE LOW POINT OF VERTICAL CURVES.

D. POSITIONING OF SUPERELEVATION TRANSITION LENGTH ON SIMPLE CURVES

50% OF TRANSITION INSIDE CURVE - MAXIMUM
33% OF TRANSITION INSIDE CURVE - DESIRABLE
20% OF TRANSITION INSIDE CURVE - MINIMUM

NOTE: CROWN WIPE-OUT SHALL BE AT SAME RATE AS THE SE TRANSITION.

E. SMOOTHING OF BREAKS IN EDGE PROFILE AT BEGIN AND END OF TRANSITION SHALL BE ACCOMPLISHED BY VERTICAL CURVE WITH A MINIMUM LENGTH (IN FEET) EQUAL TO THE SPEED DESIGN (IN MPH).

TYPICAL SECTION DETAIL TO BE USED WHEN EXISTING PAVEMENT IS TO BE RESURFACED WITH TWO INCHES OR MORE OF ASPHALTIC CONCRETE

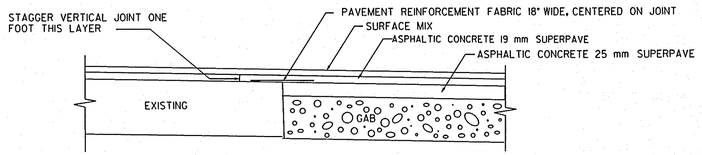

TYPICAL SECTION DETAIL TO BE USED WHEN EXISTING PAVEMENT IS TO BE RESURFACED WITH LESS THAN TWO INCHES OF ASPHALTIC CONCRETE

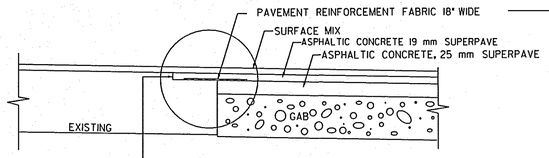

MILL EXISTING LANE ONE FOOT WIDE TO DEPTH OF ADJOINING LAYER TO BE PLACED. COST OF MILLING FOR THIS WORK TO BE INCLUDED IN THE UNIT PRICE BID FOR PAVEMENT REINFORCING FABRIC.

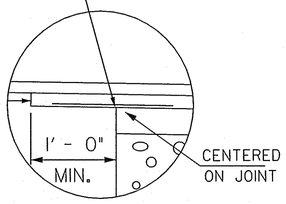

STATIONS THAT MAY REQUIRE ADDITIONAL 4 INCHES OF GAB (AS PER SOILS REPORT)

BIG SHANTY STA 72+00 +/- TO STA 76+00+/- LEFT AND RIGHT
I-75 SB DETOUR STA 0+00 +/- TO STA 3+00+/-
I-75 SB DETOUR STA 9+00+/- TO STA 13+00+/-
I-75 NB DETOUR STA 100+00 +/- TO STA 103+50+/-
I-75 NB DETOUR STA 113+50+/- TO STA 117+50+/-

CROY ENGINEERING
Engineers Planners Surveyors
200 NORTH COBB PARKWAY, BLDG. 400, SUITE 413
MARIETTA, GA 30062
PHONE: (770) 971-5407 FAX: (770) 971-0620

NOT TO SCALE

REVISION DATES

STATE OF GEORGIA
DEPARTMENT OF TRANSPORTATION
OFFICE: DISTRICT 7

TYPICAL SECTIONS

BIG SHANTY CONNECTOR
PHASE 1

DRAWING No. 5-08

GPLN

SUMMARY OF QUANTITIES- ROADWAY

ASPHALTIC CONCRETE

LOCATION / DRAWING NO. / ROAD	GR AGGR BASE CRS. INCL MATL 10" THICK (BARRETT LAKES BLVD)	GR AGGR BASE CRS. INCL MATL 12" THICK (BIG SHANTY CONNECTOR)	GR AGGR BASE CRS. INCL MATL 12" THICK (I-75 DETOUR. THROUGH LANES)	GR AGGR BASE CRS. INCL MATL 12" THICK (I-75 DETOUR. SHOULDERS)	ADDITIONAL DEPTH OF GR AGGR BASE CRS. INCL MATL 4" THICK PER SOIL SURVEY REPORT	AGGREGATE SURFACE COURSE (UNDER TEMPORARY BARRIERS) 6" THICK	ASPH CONC 12.5MM OGFC, GP 2 ONLY, INCL POLYMER-MODIFIED BITUM MATL & H LIME 135 LB/SY(I-75 DETOUR)	ASPH CONC 12.5MM SUPERPAVE, GP 1 OR 2, INCL POLYMER-MODIFIED BITUM MATL & H LIME 165 LB/SY(I-75 DETOUR. THRU LANES)	ASPH CONC 12.5MM SUPERPAVE, GP 1 OR 2, INCL POLYMER-MODIFIED BITUM MATL & H LIME 165 LB/SY(I-75 DETOUR. SHOULDER)	RECYCLED ASPHALTIC CONCRETE LEVELING, INCL. BITUM MATL & H LIME	RECYCLED ASPH CONC, 25mm SUPERPAVE. GP 1 OR 2, INC BITUM MATL & H LIME 440 LB/SY (BIG SHANTY CONNECTOR)	RECYCLED ASPH CONC, 25mm SUPERPAVE. GP 1 OR 2, INC BITUM MATL & H LIME 440 LB/SY (I-75 DETOUR. THROUGH LANES)	RECYCLED ASPH CONC, 25mm SUPERPAVE. GP 1 OR 2, INC BITUM MATL & H LIME 440 LB/SY (I-75 DETOUR. SHOULDERS)	RECYCLED ASPH CONC, 12.5mm SUPERPAVE. GP2 ONLY, INCL BITUM MATL & H LIME 165 LB/SY (BIG SHANTY CONNECTOR)	RECYCLED ASPH CONC, 19mm SUPERPAVE. GP1 OR GP2. INCL BITUM MATL & H LIME 220 LB/SY (BIG SHANTY CONNECTOR)	RECYCLED ASPH CONC, 19mm SUPERPAVE. GP1 OR GP2. INCL BITUM MATL & H LIME 220 LB/SY (I-75 DETOUR. THROUGH LANES)	RECYCLED ASPH CONC, 19mm SUPERPAVE. GP1 OR GP2. INCL BITUM MATL & H LIME 220 LB/SY (I-75 DETOUR. SHOULDERS)	BITUM TACK COAT	MILL ASPH CONC PVMT. 1½ IN DEPTH	MILL ASPH CONC PVMT VARIABLE DEPTH	PLAIN PC CONC PVMT. CL 3 CON. 12" THK	CONC SIDEWALK. 4 IN (LT & RT)	CONC SIDEWALK. 6 IN (LT & RT) TO BE USED IN RADII & MULTI-USE PATH	CONC MEDIAN 4 IN STD. 9032-B NON-COLORED UNDER & BETWEEN BRIDGES	CONC MEDIAN. 4 IN (RED STAMPED) STD. 9032-B.	CONC HEADER CURB 6 IN TYPE 2	CURB & GUTTER: CONC CURB & GUTTER 8 IN X 30 IN. TP 2 STD. 9032B	CURB & GUTTER: CONC CURB & GUTTER, 8 IN X 30 IN. TP 7 STD. 9032B	PVMT REINF. FABRIC STRIPS. TP. 2. 18 INCH WIDTH	CLASS "B" CONC. BASE OR PVMT WIDENING
	TON	TON	TON	TON	TON	TON	TON	TON	TON	TON	TON	TON	TON	TON	TON	TON	TON	TON	GAL	SY	SY	SY	SY	SY	SY	SY	LF	LF	LF	LF	CY
BIG SHANTY CONNECTOR																																		
DWG NO. 13-01	130	2412								30	698			453	349			433	2310			208	616	—	78	100	981	470	380	2.6
DWG NO. 13-02		2997								—	780			293	389			354	—			445	725	117	67	—	1163	1160	—	—
DWG NO. 13-03		2818								—	729			273	364			331	—			313	621	—	91	25	1120	1121	—	—
DWG NO. 13-04		3206			43					—	873			327	436			397	—			273	609	—	154	385	1006	926	—	—
DRIVEWAY STA. 67+74.00		153								5	—			22	30			13	—			—	—	—	—	—	150	—	—	2.1
DWG NO. 13-05		1836			576					20	513			345	257			326	1850			127	315	—	69	—	526	419	310	5.1
DRIVEWAY STA. 72+83.35		216								5	—			31	41			19	—			—	—	—	—	—	269	—	—	2.5
BARRETT LAKES BLVD																																		
DWG NO. 14-01	220									—	62			169	31			117	1773			2	310	—	—	—	285	—	285	2.8
DWG NO. 14-02	4									—	—			151	—			92	1836			9	—	—	—	—	17	—	—	—
I-75 NB DETOUR																																		
STA. 100+00 - 115+00			2476	1495	260	17	407	310	187			826	499			413	250	902																
STA. 115+00 - END			3846	2456	360	290	646	481	307			1282	819			641	410	1433																
I-75 SB DETOUR																																		
STA. 0+00 - 15+00			3183	1911	608	226	522	398	239			1061	637			531	319	1158																
15+00 - END			3473	1501		18	511	435	188			1158	501			579	251	1131																
I-75 NORTH BOUND																																		
STA. 130+00 TO 131+51										30								10			413													
STA. 133+54 TO 135+00										22								9			459													
STA. 142+04 TO 148+00																					662													
I-75 SOUTH BOUND																																		
STA. 20+97 TO 25+47																					500													
STA. 27+63 TO 30+96										541								79			2048													
STA. 33+34 TO 35+00										97								38			965													
SUB-TOTAL	354	13,638	12,978	7362	1,847	551	2086	1624	922	930	3655	4327	2455	2064	1897	2164	1229	6842	9454		5047	1377	3196	117	459	510	5517	4096	975	15.1
AS DIRECTED	46	862	522	638	153	49	214	376	128	70	95	173	95	86	103	136	71	358	146		153	123	204	83	41	20	183	104	50	2.9
TOTALS	400	14,500	13,500	8,000	2000	600	2300	2000	1050	1000	3750	4500	2550	2150	2000	2300	1300	7200	9600		5200	1500	3400	200	500	530	5700	4200	1025	18

TRAFFIC CONTROL

CSSTP-0006-00(869)

LOCATION	LS
CSSTP-0006-00(869)	1
TOTAL	1

FIELD ENGINEER'S OFFICE- TP 3

EACH 1

GRADING COMPLETE

CSSTP-0006-00(869)

LUMP SUM

CROY ENGINEERING
Engineers Planners Surveyors
200 NORTH COBB PARKWAY, BLDG. 400, SUITE 413
MARIETTA, GA 30062
PHONE: (770) 971-5407 FAX: (770) 971-0620

REVISION DATES
10/01/09

STATE OF GEORGIA
DEPARTMENT OF TRANSPORTATION
OFFICE: DISTRICT 7

SUMMARY OF QUANTITIES

BIG SHANTY CONNECTOR
PHASE 1

DRAWING No. 6-01

GPLN

SUMMARY OF QUANTITIES / ROADWAY / DRAINAGE

6" UNDERDRAIN INCLUDING AGGREGATE GA STD 9029B

LOCATION	LIN. FT.
BIG SHANTY CONNECTOR	
STA. 52+98. LT. TO STA. 60+50. LT	752
STA. 52+98 MEDIAN TO STA. 60+75. MEDIAN	777
STA. 52+94. RT. TO STA. 61+00 RT.	806
SUBTOTAL	2335
AS DIRECTED BY ENGINEER	665
TOTAL	3000

TEMPORARY CONCRETE BARRIER (METHOD 1)

LOCATION	LIN. FT.
I-75 DETOUR (CENTER MEDIAN WALL)	
STA. 2+50. RT TO STA. 129+50. LT.	2275
SOUTH BOUND DETOUR	
STA. 11+50 LT. TO STA. 16+04. LT.	454
NORTH BOUND DETOUR	
STA. 114+50. RT TO STA. 118+50 RT.	450
TOTAL	3179

CONCRETE RIGHT- OF- WAY MARKERS GA. STD. 9003

LOCATION	EA
BARRETT LAKES BLVD	
STA. 5+42.89 - 37.32' RT.	1
STA. 6+68.15 - 52.93' RT.	1
STA. 8+37.09 - 46.82' LT.	1
STA. 8+67.55 - 72.72' LT.	1
STA. 8+92.50 - 93.94' LT.	1
STA. 10+67.29 - 88.70' LT.	1
STA. 10+96.26 - 55.12' LT.	1
STA. 12+50.11 - 55.28' LT.	1
BIG SHANTY CONNECTOR	1
STA. 52+57.27 - 107.86' RT.	1
STA. 52+93.15 - 75.00' RT.	1
STA. 54+66.51 - 75.00' RT.	1
STA. 61+21.01 - 60.00' RT.	1
STA. 66+75.00 - 60.00' RT.	1
STA. 62+74.01 - 60.00' RT.	1
STA. 69+99.85 - 60.00' RT.	1
STA. 70+99.88 - 70.01' RT.	1
STA. 71+10.34 - 60.00' RT.	1
STA. 74+49.85 - 70.00' RT.	1
STA. 74+82.04 - 101.01' RT.	1
STA. 75+87.69 - 87.56' RT.	1
STA. 76+38.89 - 29.84' RT.	1
STA. 52+70.64 - 115.34' LT	1
STA. 52+98.50 - 85.00' LT.	1
STA. 54+31.23 - 85.00' LT.	1
STA. 60+89.11 - 85.00' LT.	1
STA. 61+10.00 - 85.00' LT.	1
STA. 61+10.00 - 60.00' LT.	1
STA. 62+74.01 - 60.00' LT.	1
STA. 66+75.00 - 60.00' LT.	1
STA. 71+10.34 - 60.00' LT.	1
STA. 74+24.25 - 60.00' LT.	1
STA. 74+62.25 - 107.67' LT.	1
TOTAL	32

GUARDRAIL QUANTITIES

	GUARDRAIL		ANCHORAGES		
	"T" BEAM	"W" BEAM	TP 1	TP 12	
GA. STDS.	4012C	4010	4012D	4040	
LOCATION & SIDE	LIN FT	LIN FT	EACH	EACH	
I-75 SB STA. 30+86. LT		7	1		
STA. 30+99. LT.	9				
STA. 30+72. RT.		7	1		
STA. 30+85. RT.	9				
I-75 SB STA. 33+45. LT.	21				
STA. 35+15. LT		150			
STA. 33+31. RT.	21				
STA. 35+39. RT.		188		1	
I-75 SB STA. 39+42. RT.			1		
STA. 43+23. RT.		388		1	
I-75 NB STA. 129+46. LT.		188		1	
STA. 131+34. LT.	21				
STA. 129+94. RT.		125		1	
STA. 131+19. RT.	21				
I-75 NB STA. 133+53. LT.	9				
STA. 133+65. LT.		13	1		
STA. 133+43. RT.	9				
STA. 133+51. RT.		13	1		
I-75 NB STA. 116+61. LT.			1		
STA. 117+86. LT.		125		1	
I-75 NB STA. 141+07. LT.			1		
STA. 144+13. LT.		313		1	
SB DETOUR STA. 16+65. RT.			1		
STA. 25+50 RT.		888		1	
NB DETOUR STA101+00. LT.			1		
STA. 103+00 LT.		200		1	
TOTALS	120	2605	9	8	

NOTE: THE ACTUAL BEGINNING AND ENDING OF GUARDRAIL MAY BE ADJUSTED TO MEET FIELD CONDITION, AS DIRECTED BY THE ENGINEER.

FOUNDATION BACKFILL MATERIAL TYPE II

LOCATION	TON
STA. 60+86. LT. U/S @ CULVERT	
STRUCT. NO. BI. 1	222
STA. 60+92. RT. D/S @ CULVERT	
STRUCT. NO. BI	143
TOTAL	365

PLAIN CONCRETE DITCH PAVING 4" THICK GA DETAIL D-10

LOCATION	SQ. YDS.
SOUTH BOUND DETOUR	
STA. 2+50, RT. TO STA. 7+75, RT. (6:1-2:1)	602
STA. 16+50, RT. TO STA. 24+00 RT. (2:1-2:1)	539
STA. 6+50, LT. TO STA. 11+50 LT. (6:1-2:1)	573
STA. 14+00, LT. TO STA. 18+50, LT. (2:1,2:1)	324
NORTH BOUND DETOUR	
STA. 102+50, LT. TO STA. 110+50, LT. (6:1-2:1)	917
STA. 110+50. LT. TO STA. 116+00, LT. (4:1-6:1)	746
STA. 118+00, RT. TO STA. 124+50, RT. (4:1-4:1)	740
BIG SHANTY CONNECTOR	
STA. 61+00	333
SUBTOTAL	4774
AS DIRECTED	226
TOTAL	5000

CONCRETE SPILLWAY GA STD 9017J

LOCATION	TYPE 1 EACH
BRIDGE NO. 1 (SOUTH BOUND)	1
BRIDGE NO. 2 (NORTH BOUND)	1
SUBTOTAL	2
AS DIRECTED BY ENGINEER	—
TOTAL	2

CROY ENGINEERING
Engineers Planners Surveyors
200 NORTH COBB PARKWAY, BLDG. 400, SUITE 413
MARIETTA, GA 30062
PHONE: (770) 971-5407 FAX: (770) 971-0820

REVISION DATES

STATE OF GEORGIA
DEPARTMENT OF TRANSPORTATION
OFFICE: DISTRICT 7

SUMMARY OF QUANTITIES

BIG SHANTY CONNECTOR
PHASE 1

DRAWING No. 6-02

GPLN

SUMMARY OF QUANTITIES / DRAINAGE

STRUCTURE NUMBER	LOCATION	FILTER FABRIC FOR EMBANKMENT STABILIZATION	INLET/OUTLET STRUCTURES: GA STD 1125 CLASS "A" CONCRETE INCL. REINF. STEEL	GA DET D-9 CLASS "A" CONCRETE	GA DET D-9 REINFORCING STEEL	GA STD 2325 CLASS "A" CONCRETE DESIGN I HK12 FT	GA STD 2325 REINFORCING STEEL	GA STD 2332 CLASS "A" CONCRETE	GA STD 2332 REINFORCING STEEL	GA STD 1120 18" STORM (F.E.S.)	GA STD 1120	ACCEPTABLE MATERIAL: STORM DRAIN PIPE LINEAR FEET 0-10 18"	H-0-10' 24"	H-20-25 24"	H-30-35 24"	H-0-10' 30"	H-0-10' 36"	APPROXIMATE GRADE OF PIPE	MAXIMUM HEIGHT OF FILL OVER PIPE	SLOPE DRAIN PIPE - 15"	RECONSTRUCT MINOR DRNG STRUCTURE	STRUCTURES: CATCH BASINS GP 1, 36" OR < GA STD 1033D 6' 0" OR LESS	GA STD 1033D ADDITIONAL DEPTH	GA STD 1034D 6' 0" OR LESS	GA STD 1034D ADDITIONAL DEPTH	GA STD 1033G 6' 0" OR LESS	GA STD 1033G ADDITIONAL DEPTH	DROP INLETS GP 1, 36" OR < GA STD 9031S 6' 0" OR LESS	GA STD 9031S ADDITIONAL DEPTH	GA STD 1019A 6' 0" OR LESS	GA STD 1019A ADDITIONAL DEPTH	DITCH DROP INLETS GA STD D-4 0'-0" OR LESS	GA STD D-4 ADDITIONAL DEPTH	GA STD D-4 STORM SAFETY GRATES, TP 1	MANHOLE TP 1 6' OR < GA. STD. 1011A 6' 0" OR LESS	GA. STD. 1011A ADDITIONAL DEPTH	JUNCTION BOX GA STD 9031U 6' 0" OR LESS	GA STD 9031U ADDITIONAL DEPTH
		SY	CY	CY	LB	CY	LB	CY	LB	EA	EA	18"	24"	24"	24"	30"	36"	%	FT	LF	EA	EA	LF	EA	LF	EA	LF	EA	LF	EA	LF	EA	LF	EA	LF	EA	LF	EA	
	BIG SHANTY CONNECTOR																																						
A11	STA. 58+80, LT.											77						0.80	4.5			1	—											—	—			
A10	STA. 58+80, RT.											205						1.00	4.5			1	—											—	—			
A9	STA. 56+75, RT											125						1.00	4.5			1	—											—	—			
A9.1	STA. 56+75, LT.											86						1.20	4.5			1												—	—			
A8.1A	STA. 55+29, LT.											20						2.08	3.0			1	—											—	—			
A8.1B	STA. 55+70, LT.											20						0.70	3.1			1	—											—	—			
A8.1	STA. 55+50, LT.											89						1.61	5.0					1	—									—	—			
A8	STA. 55+50, RT.											85						1.00	5.0															1	1.5			
A7	STA. 54+65, RT.											20						1.00	5.5			1	1.4											—	—			
A6	STA. 54+44, RT.												20					1.00	5.5					1	1.9									—	—			
A5.1	STA. 54+30, MEDIAN											33						4.57	3.8			1	—															
A5	STA. 54+24, RT.												163					1.03	14.6			1	2.1															
A4.1	STA. 52+68, LT.											175						5.81	6.2											1	0.5							
A4	STA. 52+64, RT.															47		1.62	9.4															1	5.4			
A3	STA. 52+45, RT.															76		0.53	6.8			1	—															
A2	STA. 51+70, RT.																45	0.55	6.9															1	3.8			
A1	STA. 51+25, RT.		3.05									—	—	—	—	—	—	—	—																			
A2.1	STA. 51+73, RT.														EX																			EX			
A2.2	STA. 51+73, LT.											EX																						EX			
A2.3	STA. 51+87, LT.											EX																						1			
A2.4	STA. 51+74, LT.											13						0.70	2.6			1	—															
A2.5	STA. 51+65, LT.											12						0.70	2.5													1						
B7	STA. 72+00, LT.											89						1.00	3.1			1	—															
B6	STA. 72+00, RT.											251						2.80	4.0			1	—															
B5.1	STA. 69+50, LT.											77						0.88	4.5			1	—															
B5	STA. 69+50, LT.											251						3.00	4.8			1	—															
B4.1	STA. 67+00, LT.											77						0.92	4.1			1	—															
B4	STA. 67+00, RT.											301						2.40	3.6			1	—															
B3.1	STA. 64+00, LT.											77						0.54	4.5			1	—															
B3	STA. 64+00, RT.												276					1.46	3.5			1	—															
B2.2	STA. 62+33, LT.											113						4.60	7.8			—	—													1	3.4		
B2.1	STA. 61+25, LT.												77					0.70	4.0			1	—															
B2	STA. 61+25, RT.															29		0.55	4.0			1	—															
B1.1A	STA. 60+86, RT @ CULVERT																																					
B1.1	STA. 60+86, LT. U/S & CULVERT	606			201	①14																															
B1	STA. 61+11, RT. D/S @ CULVERT	400				②113, 32	18, 384	③6.54	516																														
	STA. 61+20, RT. STREAM "TIE-IN"																																					
	(DRAINAGE SUB-TOTALS DWG. - NO 6-03)	1006	3.05	14	201	127, 32	18, 384	6.54	516			2196	536			152	45					21	3.6	2	1.9			1	0.5	1				5	14.1		

① SEE DRAINAGE CROSS-SECTIONS FOR INFORMATION
② INCLUDES BARRELL + BOTH WING WALLS + BOTH PARAPETS
③ APRONS ONLY

CROY ENGINEERING
Engineers Planners Surveyors
200 NORTH COBB PARKWAY, BLDG. 400, SUITE 413
MARIETTA, GA 30062
PHONE: (770) 971-5407 FAX: (770) 971-0820

REVISION DATES

STATE OF GEORGIA
DEPARTMENT OF TRANSPORTATION
OFFICE: DISTRICT 7

SUMMARY OF QUANTITIES

BIG SHANTY CONNECTOR
PHASE 1

DRAWING No. 6-03

GPLN

SUMMARY OF QUANTITIES / DRAINAGE

STRUCTURE NUMBER	LOCATION	FILTER FABRIC FOR EMBANKMENT STABILIZATION	INLET/OUTLET STRUCTURES: GA STD 1125 CLASS "A" CONCRETE INCL. REINF. STEEL	GA DET D-9 CLASS "A" CONCRETE	GA DET D-9 REINFORCING STEEL	GA STD 2325 CLASS "A" CONCRETE DESIGN 1 HC12 FT	GA STD 2325 REINFORCING STEEL	GA STD 2332 CLASS "A" CONCRETE	GA STD 2332 REINFORCING STEEL	GA STD 1120 18" STORM (F.E.S.)	GA STD 1120	ACCEPTABLE MATERIAL: STORM DRAIN PIPE LINEAR FEET 0-10	H-0-10'	H-20-25	H-30-35	H-0-10'	H-0-10'	APPROXIMATE GRADE OF PIPE	MAXIMUM HEIGHT OF FILL OVER PIPE	SLOPE DRAIN PIPE - 15"	RECONSTRUCT MINOR DRNG STRUCTURE	STRUCTURES: CATCH BASINS GP 1, 36" OR < GA STD 1033D 6' 0" OR LESS	GA STD 1033D ADDITIONAL DEPTH	GA STD 1034D 6' 0" OR LESS	GA STD 1034D ADDITIONAL DEPTH	GA STD 1033G 6' 0" OR LESS	GA STD 1033G ADDITIONAL DEPTH	DROP INLETS GP 1, 36" OR < GA STD 9031S 6' 0" OR LESS	GA STD 9031S ADDITIONAL DEPTH	GA STD 1019A 6' 0" OR LESS	GA STD 1019A ADDITIONAL DEPTH	DITCH DROP INLETS GA STD D-4 0'-0" OR LESS	GA STD D-4 ADDITIONAL DEPTH	GA STD D-4 STORM SAFETY GRATES, TP 1	MANHOLE TP 1 6'OR < GA. STD. 1011A 6' 0" OR LESS	GA. STD. 1011A ADD'L DEPTH CL 1	JUNCTION BOX GA STD 9031U 6' 0" OR LESS	GA STD 9031U ADDITIONAL DEPTH
		SY	CY	CY	LB	CY	LB	CY	LB	EA	EA	18"	24"	24"	24"	30"	36"	%	FT	LF	EA	EA	LF	EA	LF	EA	LF	EA	LF	EA	LF	EA	LF	LF	EA	LF	EA	
	BIG SHANTY CONNECTOR																																					
D1.1	STA. 65+22, LT.											126						1.81	6.0																	1	.26		
D1.0	STA. 65+68, RT.																																			1	2.1		
D3.2	STA. 71+40 LT. (RELOCATE EX. OCS)											46						4.75	7.7		1																		
D3.1	STA. 70+95, LT.											140						2.87	8.0																	1	1.2		
D3.0	STA. 71+06, RT.											—						EXIST.																		1	3.1		
F2	STA. 74+69, LT. (MAIN LINE)											43						1.00	3.5			1	—																
F1	STA. 74+73, LT. (MAIN LINE)																																			1	—		
	BIG SHANTY CONNECTOR																																					
D2	STA. 68+40, RT.											—						EXIST.																		1	2		
	BARRETT LAKES BLVD.																																					
E2	STA. 7+25, RT.											12						1.00	3.5			1	—																
E1	STA. 7+26, RT.											—																								1	—		
	DETOUR																																					
A4.5	STA. 118+20, RT. NB													106				0.51	9.0															1	—	12			
A4.4	STA. 14+37, RT. SB													132				2.51	13.5															1	5.3	12			
A4.3	STA. 15+62, LT. SB																	EXIST.	—																			1	
A4.4.1	STA. 14+48, LT. SB											96						1.78	8.5															1	—	10			
H2	STA. 8+07, LT. SB											239						0.64	4.0															1	—	10			
H1	STA. 5+85, RT. SB									1																													
I2	STA. 110+76, RT. NB											—						EXIST.																1	1.7	12			
I1	STA. 110+63, RT. NB (EX. HW)																																					
G3	STA. 23+00, RT. SB														119			1.03	17										1	.11								
G2	STA. 21+85, RT. SB																																					1
NB	BRIDGE STA. 131+21.54, RT. NB																			80																		
SB	BRIDGE STA. 30+66, RT. SB																			20																		
	(DRAINAGE SUB-TOTALS DWG. - NO 6-04)	—	—	—	—	—	—	—	—	1	—	702	—	238	119	—	—	—	—	100	—	2	—	—	—	—	—	1	.11	1	—	5	1.7	56	7	8.7	2	
	(DRAINAGE SUB-TOTALS DWG. - NO 6-03)	1006	3.05	14	201	127.32	18.384	6.54	516	—	—	2196	536		—	152	45	—	—	—	1	21	3.6	2	1.9	—	—	1	0.5	1	—	—	—	—	5	14.1	—	
	AS DIRECTED BY ENGINEER	94	1.95	6	19	6.68	616	1.46	34	—	—	50	19	12	11	10	5	—	—	20	—	—	0.7	—	0.1	—	—	—	1.2	—	0.2		0.2	4	1	5.4	—	
	TOTAL	1100	5	20	220	134	19.000	8	550	1		2898	555	250	130	162	50	—	—	120	1	23	4.3	2	2.0	1	—	2	1.8	2	0.2	5	1.9	48	13	28	2	

CROY ENGINEERING
Engineers Planners Surveyors
200 NORTH COBB PARKWAY, BLDG. 400, SUITE 413
MARIETTA, GA 30062
PHONE: (770) 971-5407 FAX: (770) 971-0620

REVISION DATES

STATE OF GEORGIA
DEPARTMENT OF TRANSPORTATION
OFFICE: DISTRICT 7

SUMMARY OF QUANTITIES

BIG SHANTY CONNECTOR
PHASE 1

DRAWING No. 6-04

GPLN

SUMMARY OF QUANTITIES / STANDARD SIGNS

STATION	INSTALLATION NUMBER	CODE	STEEL WIRE STRAND CABLE, 1/4IN (LF)	STEEL STRAIN POLE TP IV (EACH)	SIGNS (SQUARE FEET) TYPE III REFLECTIVITY TYPE 1 MATL. (0.08) SIZE	QUANTITY	SQUARE FEET	SIGNS (SQUARE FEET) TYPE IX REFLECTIVITY TYPE 2 MATL. (0.10) SIZE	QUANTITY	SQUARE FEET	GALV STEEL POSTS (LINEAR FEET) TYPE 7 LENGTH	QUANTITY	LINEAR FEET
BIG SHANTY CONNECTOR													
STA. 51+48.0 OVERHEAD	1	D-SPEC. #2						108" X 18"	1	13.50			
STA. 52+76.0 OVERHEAD	1	D-SPEC. #2						108" X 18"	1	13.50			
STA. 53+04.00, MEDIAN	1	R4-7R (24)			24" X 30"	1	5.00				12	1	12
STA. 55+00.00, RT.	2	R 2-1			24 X 30"	1	5.00				12	1	12
STA. 65+08.00, RT.	3	R 5-1(36)			36" X 24"	1	6.00				12	1	12
STA. 67+08.00, RT.	4	R 5-1 (30)			30" X 30"	1	6.25				12	1	12
STA. 68+00.00, RT.	5	R 1-1			30" X 30"	1	6.25				12	1	12
STA. 68+23.00, MEDIAN	6	R4-7R (24)			24" X 30"	1	5.00				12	1	12
STA. 69+00.00, RT.	7	W 3-3			36" X 36"	1	9.00				12	1	12
		W 16-8			44" X 8"	1	2.44						
STA. 72+03.00, RT.	9	R 5-1a (36)			36" X 24"	1	6.00				12	1	12
STA. 74+03.00, RT.	10	R 5-1 (30)			30" X 30"	1	6.25				12	1	12
STA. 76+02, MEDIAN	11	R4-7R(24)			24" X30"	1	5.00				12	1	12
STA. 53+19.00, LT.	12	R 5-1 (30)			30" X 30"	1	6.25				12	1	12
STA. 55+19.00, LT.	13	R 5-1a (36)			36" X 24"	1	6.00				12	1	12
STA. 56+50.00, LT.	14	W 3-3			36" X 36"	1	9.00						
		W 16-8			44" X 8"	1	2.44				12	1	12
STA. 67+26.00, MEDIAN	16	R4-7R (24)			24" X 30"	1	5.00				12	1	12
STA. 68+23.00, MEDIAN	17	R4-7R (24)			24" X 30"	1	5.00				12	1	12
STA. 68+43.00, LT	18	R 5-1 (30)			30" X 30"	1	6.25						
STA. 70+43.00, LT.	19	R 5-1a (36)			36" X24"	1	6.00				12	1	12
STA. 72+00.00, LT.	20	R 2-1			24" X 30"	1	5.00				12	1	12
STA. 72+65.00, LT	21	R 1-1			30" X 30"	1	6.25				12	1	12
STA. 72+76.00, LT.	22	R 6-2R			24" X 30"	1	5.00				12	1	12
STA. 74+13.00, MEDIAN	23	R 4-7R (24)			24" X 30"	1	5.00				12	1	12
STA. 74+46.0 OVERHEAD	1	D-SPEC. #3						120" X 18"	1	15.00			
STA. 76+00.0 OVERHEAD	1	D-SPEC. #3						120" X 18"	1	15.00			
BARRETT LAKE BLVD.													
STA. 5+75.00, RT.	24	W 3-3			36" X 36"	1	9.0						
		W 16-8			33" X 8"	1	1.83				12	1	12
STA. 6+25.00 OVERHEAD	1	D-SPEC. #1						84" X 18"	1	10.50			
STA. 10+80.0 OVERHEAD	1	D-SPEC. #1						84" X 18"	1	10.50			
STA. 14+00.00, LT.	25	W 3-3			36" X 36"	1	9.0						
		W 16-8			33" X 8"	1	1.83				12	1	12
GEORGE BUSBEE PKWY													
STA. 9+26 OVERHEAD	26	D-SPEC. #1						84" X 18"	1	10.50			
STA. 10+72 OVERHEAD		D-SPEC. #1						84" X 18"	1	10.50			
I-75 SOUTHBOUND													
STA. 38+35 LT. & RT.	26	W-8-13			36" X 36"	2	18.0				12	2	24
I-75 NORTHBOUND													
STA. 126+50 LT. & RT.	27	W-8-13			36" X 36"	2	18.0				12	2	24
TOTALS						31	187.04		8	99.0		26	312

SUMMARY OF QUANTITIES / PAVEMENT MARKINGS

THERMOPLASTIC TRAFFIC STRIPE

LOCATION	5" SOLID WHITE L.F.	5" SOLID YELLOW L.F.	24" SOLID WHITE L.F.	8" SOLID WHITE L.F.	5" SKIP WHITE G.L.F.	5" SKIP YELLOW G.L.F.	TRAFFIC STRIPING, WHITE S.Y.
DRAWING NUMBER							
BIG SHANTY CONN.							
26-1	1529	790	132	1221	924	132	—
26-2	1400	1161	—	—	1360	—	—
26-3	1320	1121	—	—	1210	—	—
26-4	1419	936	28	296	1400	—	—
26-5	1780	732	171	1692	730	—	—
26-6	743	540	—	—	660	540	—
26-7	680	470	—	—	570	—	91
SUBTOTALS	8871	5750	331	3209	6854	672	91
DIRECTED BY ENGINEER	429	250	169	291	146	328	9
TOTALS	9300	6000	500	3500	7000	1000	100
TOTALS (MILES)	2	2			2		

PREFORMED PLASTIC PAVEMENT MARKINGS

LOCATION	8 IN SOLID, CONTRAST (BLACK-WHITE), TP PB L.F.	10 IN SOLID WHITE TP PB L.F.	8 IN SKIP, CONTRAST (BLACK-WHITE), TP PB G.L.F.	8 IN SOLID, CONTRAST (BLACK-YELLOW), TP PB L.F.
DRAWING NUMBER				
I-75 (FINAL)				
26-8	554		1106	555
26-9	580		1160	580
26-10	520		1040	520
26-11	470		1200	470
26-12	1430	370	1060	530
26-13	590	120	700	350
26-14	519		1048	519
26-15	520		1040	520
26-16	450		900	450
26-17	550		1100	550
26-18	550		1100	550
26-19	460		1075	450
26-20	200		400	200
SUBTOTALS	7393	490	12929	6244
DIRECTED BY ENGINEER	607	110	671	256
TOTALS	8000	600	13500	6500

NOTE: ALL THERMOPLASTIC EDGE LINES SHALL BE 0.060 INCHES IN THICKNESS. ALL OTHER THERMOPLASTIC MARKINGS SHALL BE 0.090 INCHES IN THICKNESS. ALL ARROWS SHALL BE WHITE UNLESS OTHERWISE SPECIFIED. SEE PLANS FOR LOCATION.

RAISED PAVEMENT MARKERS

LOCATION	TP 1 YELLOW EACH	TP 2 CLEAR EACH	TP 3 RED/CLEAR EACH
BIG SHANTY CONNECTOR			163
BARRET LAKES BLVD	30		29
I-75 SOUTHBOUND			124
I-75 NORTHBOUND			134
TOTALS	30		450

THERMOPLASTIC PVMT MARKINGS

LOCATION	TYPE 2 ARROW EACH	TYPE 7 ARROW EACH	TYPE 1 WORD EACH
DRAWING NUMBER			
BIG SHANTY CONN.			
26-1	10	—	1
26-2	2	—	—
26-3	7	2	—
26-4	6	1	—
26-5	7	—	—
26-6	3	—	—
26-7	2	—	1
TOTALS	37	3	2

CROY ENGINEERING
Engineers Planners Surveyors
200 NORTH COBB PARKWAY, BLDG. 400, SUITE 413
MARIETTA, GA 30062
PHONE: (770) 971-5407 FAX: (770) 971-0620

REVISION DATES
10/01/09

STATE OF GEORGIA
DEPARTMENT OF TRANSPORTATION
OFFICE: DISTRICT 7

SUMMARY QUANTITIES

BIG SHANTY CONNECTOR
PHASE 1

DRAWING No. 6-05

GPLN

SUMMARY OF QUANTITIES

ATMS		QUANTITY TEMPORARY	QUANTITY PERMANENT	UNITS	TOTAL
PAY ITEM NUMBER	DESCRIPTION				
615-1200	DIRECTIONAL BORE - 5 IN	4350	-	LF	4350
647-2160	PULL BOX, PB-6	6	-	EA	6
682-6520	CONDUIT, FIBERGLASS, 2 IN	-	2100	LF	2100
682-6233	CONDUIT, NONMETL, TP 3, 2 IN	8700	-	LF	8700
682-9028	ELECTRICAL COMMUNICATION BOX, TYPE 5	-	3	EA	3
682-9029	ELECTRICAL COMMUNICATION BOX REHABILITATION	-	5	EA	5
935-1113	OUTSIDE PLANT FIBER OPTIC CABLE, LOOSE TUBE, SINGLE MODE, 24 FIBER	2845	2795	LF	5640
935-1117	OUTSIDE PLANT FIBER OPTIC CABLE, LOOSE TUBE, SINGLE MODE, 96 FIBER	10900	10090	LF	20990
935-3103	FIBER OPTIC CLOSURE, UNDERGROUND, 24 FIBER	2	2	EA	4
935-3107	FIBER OPTIC CLOSURE, UNDERGROUND, 96 FIBER	8	8	EA	16
935-4010	FIBER OPTIC SPLICE FUSION	816	816	EA	1632

REINFORCED CONCRETE APPROACH SLAB 30 FT LENGTH GA STD 9017P	
LOCATION	SQ. YDS.
BRIDGE NO. 1 (SOUTH BOUND)	
NORTHERN END	215
SOUTHERN END	215
BRIDGE NO. 2 (NORTH BOUND)	
NORTHERN END	215
SOUTHERN END	215
TOTAL	860

TRAFFIC SIGNAL INSTALLATION ITEMS		QUANTITY COMMUNICATION PLAN	QUANTITY INSTALLATION NO. 1	QUANTITY INSTALLATION NO. 2	UNITS	TOTAL
PAY ITEM NUMBER	DESCRIPTION					
615-1200	DIRECTIONAL BORE - 3 IN	50	-	180	LF	230
615-1200	DIRECTIONAL BORE - 6 IN	-	410	420	LF	830
639-3004	STEEL STRAIN POLE, TP IV	-	4	4	EA	8
647-1000	TRAFFIC SIGNAL INSTALLATION	-	1	1	LS	2
647-2160	PULL BOX, PB-6	3	-	-	EA	3
647-2170	PULL BOX, PB-7	2	-	-	EA	2
682-6120	CONDUIT, RIGID, 2 IN	50	-	-	LF	50
682-6233	CONDUIT, NONMETAL, TP 3, 2 IN	2150	1560	1960	LF	5670
935-1113	OUTSIDE PLANT FIBER OPTIC CABLE, LOOSE TUBE, SINGLE MODE, 24 FIBER	3000	-	-	LF	3000
935-1511	OUTSIDE PLANT FIBER OPTIC CABLE, DROP, SINGLE MODE, 6 FIBER	200	-	-	LF	200
935-3101	FIBER OPTIC CLOSURE, UNDERGROUND, 6 FIBER	2	-	-	LF	2
935-4010	FIBER OPTIC SPLICE FUSION	12	-	-	EA	12
935-6562	EXTERNAL TRANSCEIVER, DROP AND REPEAT, 1310 SINGLE MODE, (SIGNAL JOBS)	2	-	-	EA	2
938-1100	INTERSECTION VIDEO DETECTION SYSTEM ASSEMBLY, TYPE A	-	3	4	EA	7
938-1200	PROGRAMMING MONITOR, TYPE A	-	1	1	EA	2
938-1210	OUTPUT EXPANSION MODULE, TYPE A	-	-	2	EA	2
938-8000	TESTING (IVDS)	-	1	-	LS	1

CROY ENGINEERING
Engineers Planners Surveyors
200 NORTH COBB PARKWAY, BLDG. 400, SUITE 413
MARIETTA, GA 30062
PHONE: (770) 971-5407 FAX: (770) 971-0620

REVISION DATES		
10/01/09		

STATE OF GEORGIA
DEPARTMENT OF TRANSPORTATION
OFFICE: DISTRICT 7

SUMMARY OF QUANTITIES

BIG SHANTY CONNECTOR
PHASE 1

DRAWING No. 6-06

GPLM

SUMMARY OF QUANTITIES - EROSION CONTROL

TEMPORARY GRASSING			MULCH	AGRICULTURAL LIME	LIQUID LIME	FERTILIZER MIXED GRADE	FERTILIZER NITROGEN CONTENT
ITEM	UNIT	QUANTITY	TON	TON	GAL	TON	LB
TEMPORARY GRASSING	ACRE	8	24	16	20	1.6	400
TOTAL DISTURBED AREA		21.1	211				
		TOTAL	235				

CONSTRUCTION EXIT
TOTAL 10

CONSTRUCT AND REMOVE TEMPORARY SLOPE DRAIN
TOTAL 375 LF

CONSTRUCT AND REMOVE TEMPORARY DITCH CHECKS - STONE PLAIN RIP RAP/SAND BAGS
TOTAL 50

CONSTRUCT AND REMOVE TEMPORARY SEDIMENT BARRIER OR BALED STRAW CHECK DAM
TOTAL 3000 LF

CONSTRUCT AND REMOVE SEDIMENT BASIN, TP 1

LOCATION	SIDE	EACH
STA 53+00 (BIG SHANTY)	RT	1
STA 62+50 (BIG SHANTY)	RT	1
STA 1+00 (SB DETOUR)	RT	1
STA 15+50 (SB DETOUR)	LT	1
TOTAL		4

* FOR DETAILS, SEE SHEETS D22.

CONSTRUCT AND REMOVE INLET SEDIMENT TRAP
TOTAL 40

MAINTENANCE OF TEMPORARY SILT FENCE C
TOTAL 7350 LF

MAINTENANCE OF TEMPORARY SEDIMENT BASIN

LOCATION	SIDE	EACH
STA 53+00 (BIG SHANTY)	RT	1
STA 62+50 (BIG SHANTY)	RT	1
STA 1+00 (SB DETOUR)	RT	1
STA 15+50 (SB DETOUR)	LT	1
TOTAL		4

MAINTENANCE OF CHECK DAMS ALL TYPES
TOTAL 500 LF

MAINTENANCE OF SEDIMENT BARRIER BALED STRAW
TOTAL 1500 LF

MAINTENANCE OF CONSTRUCTION EXIT
TOTAL 20

MAINTENANCE OF INLET SEDIMENT TRAP
TOTAL 40

WATER QUALITY MONITORING AND SAMPLING
TOTAL 2

WATER QUALITY INSPECTIONS
TOTAL 24 MONTHS

TEMPORARY SILT FENCE TYPE C
TOTAL 14700 LF

BARRIER FENCE (ORANGE) 4 FT
TOTAL 1500 LF

STONE DUMPED RIP RAP, TYPE 3, 24 IN
TOTAL 102 S.Y.

PLASTIC FILTER FABRIC
TOTAL 102 S.Y.

PERMANENT GRASSING			MULCH	AGRICULTURAL LIME	LIQUID LIME	FERTILIZER MIXED GRADE	FERTILIZER NITROGEN CONTENT
ITEM	UNIT	QUANTITY	TON	TON	GAL	TON	LB
PERMANENT GRASSING	ACRE	16	48	32	40	9.6	800
TOTAL DISTURBED AREA		21.1					

EROSION CONTROL MATS, SLOPES
TOTAL 14,379 SY

CROY ENGINEERING
Engineers Planners Surveyors
200 NORTH COBB PARKWAY, BLDG. 400, SUITE 413
MARIETTA, GA 30062
PHONE: (770) 971-5407 FAX: (770) 971-0620

REVISION DATES
10/01/09

STATE OF GEORGIA
DEPARTMENT OF TRANSPORTATION
OFFICE: DISTRICT 7

SUMMARY OF QUANTITIES

BIG SHANTY CONNECTOR
PHASE 1

DRAWING No. 6-07

GPLN

ITEM NO.	DESCRIPTION	UNITS	QUANTITY
	ROADWAY ITEMS		
150-1000	TRAFFIC CONTROL - CSSTP 0006-00(869)	LS	1
153-1300	FIELD ENGINEERS OFFICE TP 3	EA	1
210-0100	GRADING COMPLETE - CSSTP 0006-00(869)	LS	1
310-1101	GR AGGR BASE CRS, INCL MATL	TN	38400
318-3000	AGGR SURF CRS	TN	600
400-3130	ASPH CONC 12.5 MM SUPERPAVE, GP 1 OR GP 2, INCL POLYMER-MODIFIED BITUM MATL & H LIME	TN	3050
400-3206	ASPH CONC 12.5 MM OGFC, GP 2 ONLY, INCL POLYMER-MODIFIED BITUM MATL & H LIME	TN	2300
402-1812	RECYCLED ASPH CONC LEVELING, INCL BITUM MATL & H LIME	TN	1000
402-3121	RECYCLED ASPH CONC 25 MM SUPERPAVE, GP 1 OR 2, INCL BITUM MATL & H LIME	TN	10800
402-3130	RECYCLED ASPH CONC 12.5 MM SUPERPAVE, GP 2 ONLY, INCL BITUM MATL & H LIME	TN	2150
402-3190	RECYCLED ASPH CONC 19 MM SUPERPAVE, GP 1 OR 2, INCL BITUM MATL & H LIME	TN	5600
413-1000	BITUM TACK COAT	GL	7200
432-0206	MILL ASPH CONC PVMT, 1½IN DEPTH	SY	9600
433-1000	REINF CONC APPROACH SLAB	SY	860
439-0026	PLAIN PC CONC PVMT, CL 3 CONC, 12 INCH THK	SY	5200
441-0104	CONC SIDEWALK, 4 IN	SY	1500
441-0106	CONC SIDEWALK, 6 IN	SY	3400
441-0740	CONCRETE MEDIAN, 4 IN	SY	700
441-5002	CONCRETE HEADER CURB 6 IN TP 2	LF	530
441-6222	CONC CURB & GUTTER, 8 IN X 30 IN, TP 2	LF	5700
441-6740	CONC CURB & GUTTER, 8 IN X 30 IN, TP 7	LF	4200
446-1100	PVMT REINF FABRIC STRIPS, TP 2, 18 INCH WIDTH	LF	1025
500-9999	CLASS B CONC, BASE OR PVMT WIDENING	CY	18
573-2006	UNDERDRAIN PIPE INCLUDING DRAINING AGGREGATE, 6 IN	LF	3000
620-0100	TEMPORARY BARRIER, METHOD NO. 1	LF	3179
634-1200	RIGHT OF WAY MARKERS	EA	32
641-1100	GUARDRAIL, TP T	LF	120
641-1200	GUARDRAIL, TP W	LF	2605
641-5001	GUARDRAIL ANCHORAGE, TP 1	EA	9
641-5012	GUARDRAIL ANCHORAGE, TP 12	EA	8
	DRAINAGE		
207-0203	FOUND BKFILL MATL, TP 11	CY	365
441-0204	PLAIN CONC DITCH PAVING, 4 IN	SY	5000
441-0301	CONC SPILLWAY, TP 1	EA	2
455-1000	FILTER FABRIC FOR EMBANKMENT STABILIZATION	SY	1006
500-3101	CLASS A CONCRETE	CY	148
500-3800	CLASS A CONCRETE, INCL REINF STEEL	CY	3
511-1000	BAR REINF STEEL	LB	19101
550-1180	STORM DRAIN PIPE, 18 IN, H 1-10	LF	2916
550-1240	STORM DRAIN PIPE, 24 IN, H 1-10	LF	555
550-1243	STORM DRAIN PIPE, 24 IN, H 20-25	LF	250
550-1244	STORM DRAIN PIPE, 24 IN, H 25-30	LF	130
550-1300	STORM DRAIN PIPE, 30 IN, H 1-10	LF	162
550-1360	STORM DRAIN PIPE, 36 IN, H 1-10	LF	50
550-4418	FLARED END SECTION, 18 IN, SLOPE DRAIN	EA	1
576-1015	SLOPE DRAIN PIPE - 15"	LF	120
611-4001	RECONSTRUCT MINOR DRAINAGE STRUCTURE	EA	1
668-1100	CATCH BASIN, GP 1	EA	26
668-1110	CATCH BASIN, GP 1, ADDL DEPTH	LF	6
668-2100	DROP INLET, GP 1	EA	9
668-2110	DROP INLET, GP 1, ADDL DEPTH	LF	9
668-4300	STORM SEWER MANHOLE, TP 1	EA	13
668-4311	STORM SEWER MANHOLE, TP 1, ADDL DEPTH, CL 1	LF	28
668-5000	JUNCTION BOX	EA	2
668-8011	SAFETY GRATE, TP 1	SF	48

ITEM NO.	DESCRIPTION	UNITS	QUANTITY
	SIGNING AND MARKING		
636-1020	HIGHWAY SIGNS, TP 1 MATL, REFL SHEETING, TP 3	SF	187
636-1041	HIGHWAY SIGNS, TP 2 MATL, REFL SHEETING, TP 9	SF	99
636-2070	GALV STEEL POSTS, TP 7	LF	312
653-0120	THERMOPLASTIC PVMT MARKING, ARROW, TP 2	EA	37
653-0170	THERMOPLASTIC PVMT MARKING, ARROW, TP 7	EA	3
653-0210	THERMOPLASTIC PVMT MARKING, WORD, TP 1	EA	2
653-2501	THERMOPLASTIC SOLID TRAF STRIPE, 5 IN, WHITE	LM	2
653-2502	THERMOPLASTIC SOLID TRAF STRIPE, 5 IN, YELLOW	LM	2
653-1704	THERMOPLASTIC SOLID TRAF STRIPE, 24 IN, WHITE	LF	500
653-1804	THERMOPLASTIC SOLID TRAF STRIPE, 8 IN, WHITE	LF	3500
653-4501	THERMOPLASTIC SKIP TRAF STRIPE, 5 IN, WHITE	GLM	2
653-3502	THERMOPLASTIC SKIP TRAF STRIPE, 5 IN, YELLOW	GLF	1000
653-6004	THERMOPLASTIC TRAF STRIPING, WHITE	SY	100
654-1001	RAISED PVMT MARKERS TP 1	EA	30
654-1003	RAISED PVMT MARKERS TP 3	EA	450
657-1085	PREFORMED PLASTIC SOLID PVMT MKG, 8 IN, CONTRAST (BLACK-WHITE), TP PB	LF	8000
657-1104	PREFORMED PLASTIC SOLID PVMT MKG, 10 IN, WHITE, TP PB	LF	600
657-3085	PREFORMED PLASTIC SKIP PVMT MKG, 8 IN, SKIP CONTRAST (BLACK-WHITE), TP PB	GLF	13500
657-6085	PREFORMED PLASTIC SOLID PVMT MKG, 8 IN, SOLID CONTRAST (BLACK-YELLOW), TP PB	LF	6500
	SIGNAL ITEMS		
615-1200	DIRECTIONAL BORE - 3 IN	LF	230
615-1200	DIRECTIONAL BORE - 5 IN	LF	4350
615-1200	DIRECTIONAL BORE - 6 IN	LF	830
639-3004	STEEL STRAIN POLE, TP IV	EA	8
647-1000	TRAFFIC SIGNAL INSTALLATION NO - 1	LS	1
647-1000	TRAFFIC SIGNAL INSTALLATION NO - 2	LS	1
647-2160	PULL BOX, PB-6	EA	9
647-2170	PULL BOX, PB-7	EA	2
682-6120	CONDUIT, RIGID, 2 IN	LF	50
682-6233	CONDUIT, NONMETL, TP 3, 2 IN	LF	14370
682-6520	CONDUIT, FIBERGLASS, 2 IN	LF	2100
682-9028	ELECTRICAL COMMUNICATION BOX, TYPE 5	EA	3
682-9029	ELECTRICAL COMMUNICATION BOX REHABILITATION	EA	5
935-1113	OUTSIDE PLANT FIBER OPTIC CABLE, LOOSE TUBE, SINGLE MODE, 24 FIBER	LF	8640
935-1117	OUTSIDE PLANT FIBER OPTIC CABLE, LOOSE TUBE, SINGLE MODE, 96 FIBER	LF	20990
935-1511	OUTSIDE PLANT FIBER OPTIC CABLE, DROP, SINGLE MODE, 6 FIBER	LF	200
935-3101	FIBER OPTIC CLOSURE, UNDERGROUND, 6 FIBER	EA	2
935-3103	FIBER OPTIC CLOSURE, UNDERGROUND, 24 FIBER	EA	4
935-3107	FIBER OPTIC CLOSURE, UNDERGROUND, 96 FIBER	EA	16
935-4010	FIBER OPTIC SPLICE, FUSION	EA	1644
935-6562	EXTERNAL TRANSCEIVER, DROP AND REPEAT, 1310 SINGLE MODE, (SIGNAL JOBS)	EA	2
938-1100	INTERSECTION VIDEO DETECTION SYSTEM ASSEMBLY, TYPE A	EA	7
938-1200	PROGRAMMING MONITOR, TYPE A	EA	2
938-1210	OUTPUT EXPANSION MODULE, TYPE A	EA	2
938-8000	TESTING	LS	1

CROY ENGINEERING
Engineers Planners Surveyors
200 NORTH COBB PARKWAY, BLDG. 400, SUITE 413
MARIETTA, GA 30062
PHONE: (770) 971-5407 FAX: (770) 971-0620

REVISION DATES
10/01/09

STATE OF GEORGIA
DEPARTMENT OF TRANSPORTATION
OFFICE: DISTRICT 7

DETAILED ESTIMATE

BIG SHANTY CONNECTOR
PHASE 1

DRAWING No. 9-01

GPLN

ITEM NO.	DESCRIPTION	UNITS	QUANTITY
	BRIDGE NO. 1		
207-0203	FOUND BKFILL MATL, TP 11	CY	27
211-0200	BRIDGE EXCAVATION, GRADE SEPARATION	CY	272
441-0004	CONC SLOPE PAV, 4 IN	SY	940
500-0100	GROOVED CONCRETE	SY	1534
500-1006	SUPERSTR CONCRETE, CL AA, BR NO - 1	LS	1
500-2100	CONCRETE BARRIER	LF	464
500-3002	CLASS AA CONCRETE	CY	311
507-9001	PSC BEAMS, AASHTO TYPE 1, BR NO - 1	LF	342
507-9002	PSC BEAMS, AASHTO TYPE 11, BR NO - 1	LF	447
507-9031	PSC BEAMS, AASHTO, BULB TEE, 63 IN, BR NO - 1	LF	1326
511-1000	BAR REINF STEEL	LB	45141
511-3000	SUPERSTR REINF STEEL, BR NO - 1	LS	1
514-1000	EPOXY COATED SUPERSTR REINF STEEL, BR NO - 1	LS	1
520-1125	PILING IN PLACE, STEEL H, HP 12 X 53	LF	1120
520-1147	PILING IN PLACE, STEEL H, HP 14 X 73	LF	700
520-4125	LOAD TEST, STEEL H, HP 12 X 53	EA	1
520-4147	LOAD TEST, STEEL H, HP 14 X 73	EA	1
	BRIDGE NO. 2		
207-0203	FOUND BKFILL MATL, TP 11	CY	27
211-0200	BRIDGE EXCAVATION, GRADE SEPARATION	CY	288
441-0004	CONC SLOPE PAV, 4 IN	SY	600
500-0100	GROOVED CONCRETE	SY	1306
500-1006	SUPERSTR CONCRETE, CL AA, BR NO - 2	LS	1
500-2100	CONCRETE BARRIER	LF	393
500-3002	CLASS AA CONCRETE	CY	299
507-9001	PSC BEAMS, AASHTO TYPE 1, BR NO -	LF	627
507-9031	PSC BEAMS, AASHTO, BULB TEE, 63 IN, BR NO - 2	LF	1169
511-1000	BAR REINF STEEL	LB	42203
511-3000	SUPERSTR REINF STEEL, BR NO - 2	LS	1
514-1000	EPOXY COATED SUPERSTR REINF STEEL, BR NO - 2	LS	1
520-1125	PILING IN PLACE, STEEL H, HP 12 X 53	LF	1240
520-1147	PILING IN PLACE, STEEL H, HP 14 X 73	LF	1220
520-4125	LOAD TEST, STEEL H, HP 12 X 53	EA	1
520-4147	LOAD TEST, STEEL H, HP 14 X 73	EA	1

ITEM NO.	DESCRIPTION	UNITS	QUANTITY
	TEMPORARY EROSION CONTROL		
163-0232	TEMPORARY GRASSING	AC	8
163-0240	MULCH	TN	235
163-0300	CONSTRUCTION EXIT	EA	10
163-0520	CONSTRUCT AND REMOVE TEMPORARY PIPE SLOPE DRAIN	LF	375
163-0527	CONSTRUCT AND REMOVE TEMPORARY CHECK DAMS, STONE PLAIN RIP RAP/SAND BAGS	EA	50
163-0529	CONSTRUCT AND REMOVE TEMPORARY SEDIMENT BARRIER OR BALED STRAW CHECK DAM	LF	3000
163-0531	CONSTRUCT AND REMOVE SEDIMENT BASIN, TP 1, STA NO - 53+00	EA	1
163-0531	CONSTRUCT AND REMOVE SEDIMENT BASIN, TP 1, STA NO - 62+50	EA	1
163-0531	CONSTRUCT AND REMOVE SEDIMENT BASIN, TP 1, STA NO - 1+00 (SB DETOUR)	EA	1
163-0531	CONSTRUCT AND REMOVE SEDIMENT BASIN, TP 1, STA NO - 15+50 (SB DETOUR)	EA	1
163-0550	CONSTRUCT AND REMOVE INLET SEDIMENT TRAP	EA	40
165-0030	MAINTENANCE OF TEMPORARY SILT FENCE, TP C	LF	7350
165-0041	MAINTENANCE OF CHECK DAMS-ALL TYPES	LF	500
165-0060	MAINTENANCE OF TEMPORARY SEDIMENT BASIN STA NO - 53+00	EA	1
165-0060	MAINTENANCE OF TEMPORARY SEDIMENT BASIN STA NO - 62+50	EA	1
165-0060	MAINTENANCE OF TEMPORARY SEDIMENT BASIN STA NO - 1+00 (SB DETOUR)	EA	1
165-0060	MAINTENANCE OF TEMPORARY SEDIMENT BASIN STA NO - 15+50 (SB DETOUR)	EA	1
165-0071	MAINTENANCE OF SEDIMENT BARRIER - BALED STRAW	LF	1500
165-0101	MAINTENANCE OF CONSTRUCTION EXIT	EA	20
165-0105	MAINTENANCE OF INLET SEDIMENT TRAP	EA	40
167-1000	WATER QUALITY MONITORING AND SAMPLING	EA	2
167-1500	WATER QUALITY INSPECTIONS	MO	24
171-0030	TEMPORARY SILT FENCE, TYPE C	LF	14700
643-8200	BARRIER FENCE (ORANGE), 4 FT	LF	1500
700-7000	AGRICULTURAL LIME	TN	16
700-7010	LIQUID LIME	GL	20
700-8000	FERTILIZER MIXED GRADE	TN	2
700-8100	FERTILIZER NITROGEN CONTENT	LB	400
	PERMANENT EROSION CONTROL		
163-0240	MULCH	TN	48
603-2182	STN DUMPED RIP RAP, TP 3, 24 IN	SY	102
603-7000	PLASTIC FILTER FABRIC	SY	102
700-6910	PERMANENT GRASSING	AC	16
700-7000	AGRICULTURAL LIME	TN	32
700-7010	LIQUID LIME	GL	40
700-8000	FERTILIZER MIXED GRADE	TN	10
700-8100	FERTILIZER NITROGEN CONTENT	LB	800
716-2000	EROSION CONTROL MATS, SLOPES	SY	14379

CROY ENGINEERING
Engineers Planners Surveyors
200 NORTH COBB PARKWAY, BLDG. 400, SUITE 413
MARIETTA, GA 30062
PHONE: (770) 971-5407 FAX: (770) 971-0620

REVISION DATES
10/01/09

STATE OF GEORGIA
DEPARTMENT OF TRANSPORTATION
OFFICE: DISTRICT 7

DETAILED ESTIMATE

BIG SHANTY CONNECTOR
PHASE 1

DRAWING No. 9-02

GPLN

10/15/2009 10:09:34 AM	PRF	y:\0313 big shanty conn\design\006869 phase 1\dgn\006869traffic-approved-7-31-09.dgn	COUNTY	PROJECT NUMBER	SHEET NO.	TOTAL SHEETS
USER:dwebb	$$PENTABLE$$		COBB	CSSTP-0006-00(869)	24	370

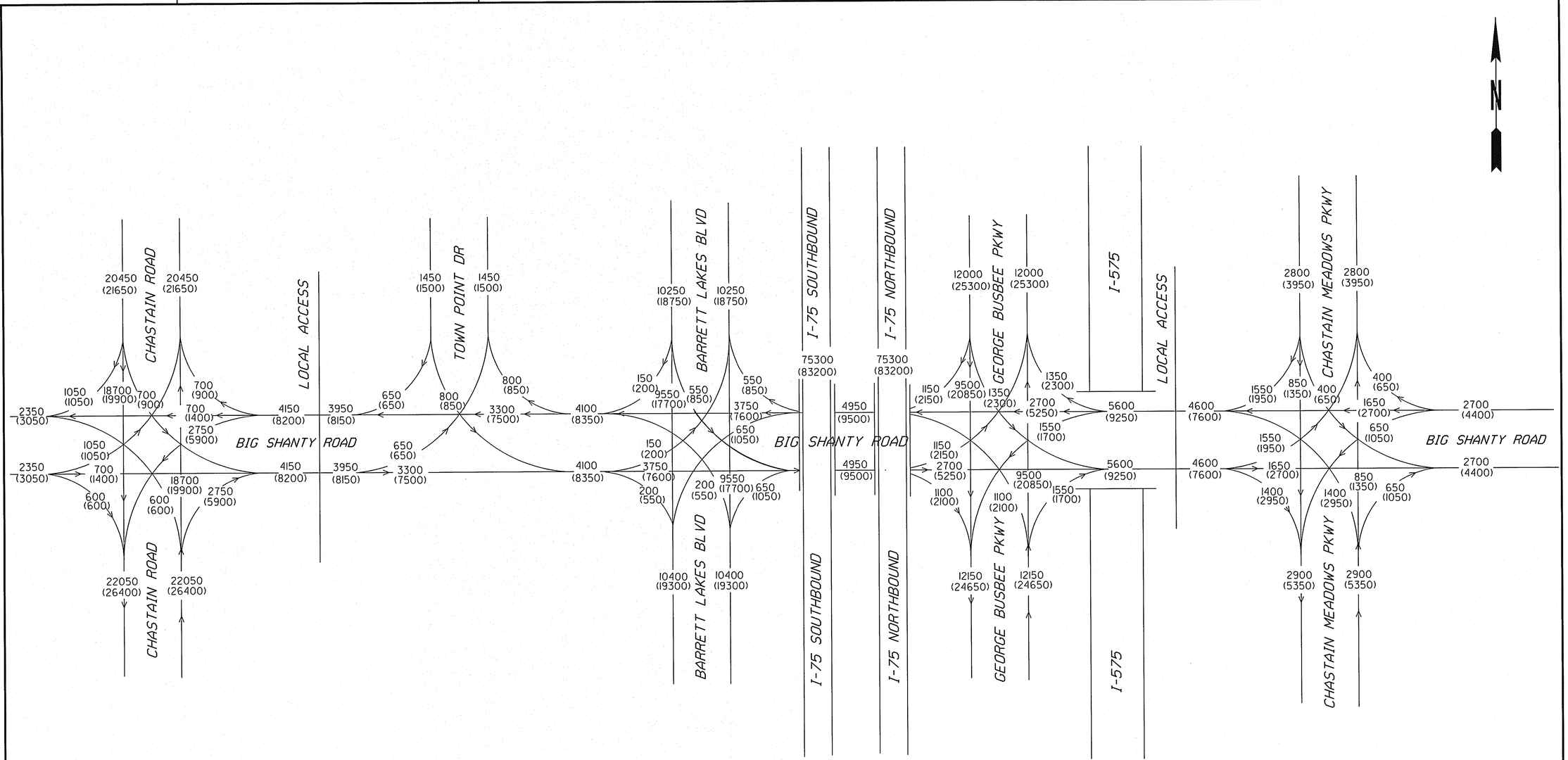

Big Shanty Rd 24hr T= 5%
SU= 4%
COMB= 1%

Interstate 75 24hr T= 13%
SU= 6%
COMB= 7%

LEGEND

00 2011 ADT
(00) 2031 ADT

Moreland Altobelli Associates, Inc.
2211 Beaver Ruin Road
Suite 190
Norcross, Georgia 30071
Telephone (770) 263-5945

CROY ENGINEERING
Engineers
Planners
Surveyors
200 NORTH COBB PARKWAY, BLDG. 400, SUITE 413
MARIETTA, GA 30062
PHONE: (770) 971-5407 FAX: (770) 971-0620

REVISION DATES		

STATE OF GEORGIA
DEPARTMENT OF TRANSPORTATION
OFFICE:DISTRICT 7

YEAR 2011/2031 AVERAGE DAILY TRAFFIC
TRAFFIC FLOW DIAGRAM

BIG SHANTY CONNECTOR
PHASE I - P.I. NO. 0006869

DRAWING No. 10-01

GPLM

10/15/2009 10:09:34 AM	PRF	y:\0313 big shanty conn\design\006869 phase 1\dgn\006869traffic-approved-7-31-09.dgn	COUNTY	PROJECT NUMBER	SHEET NO.	TOTAL SHEETS
USER:dwebb	$$PENTABLE$$		COBB	CSSTP-0006-00(869)	25	370

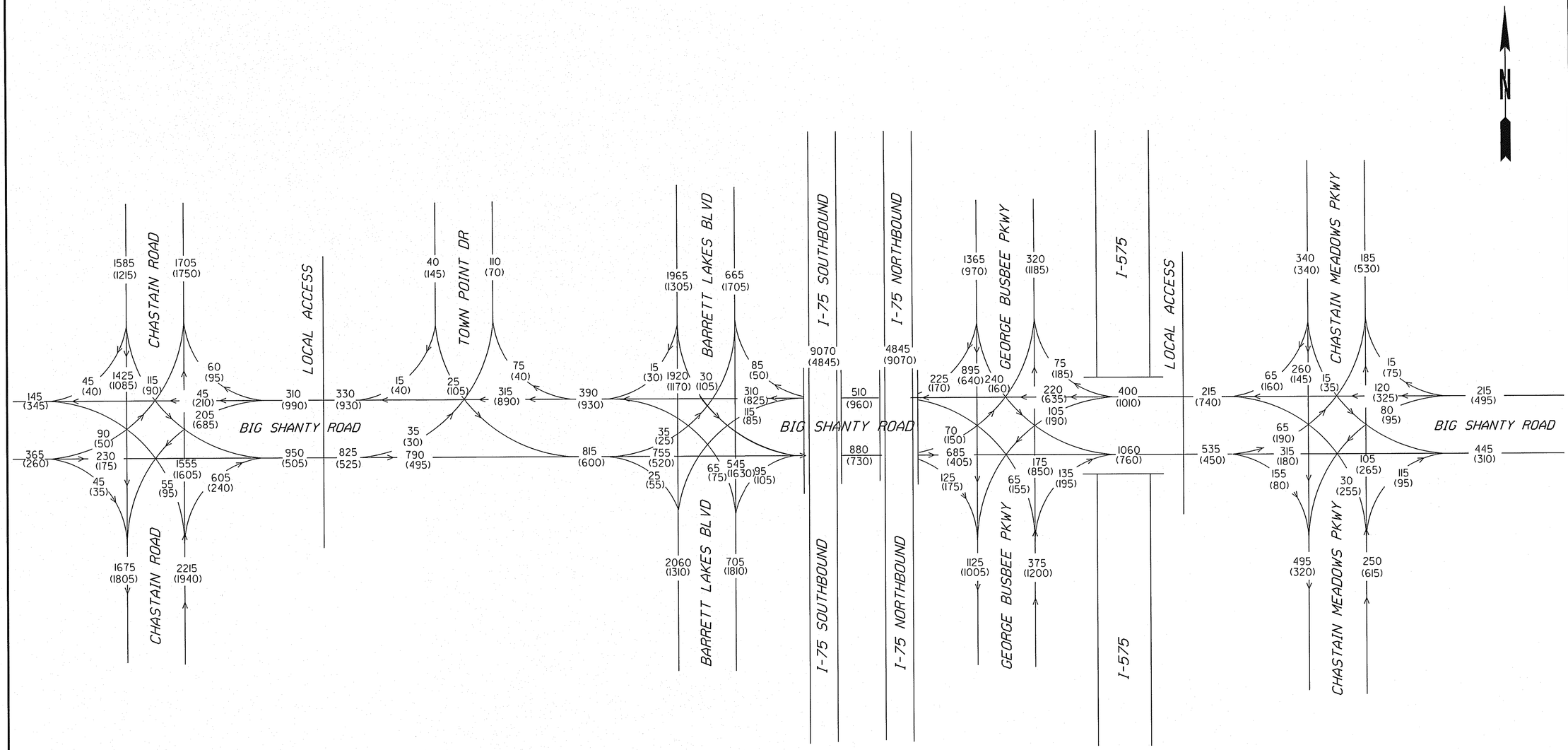

Big Shanty Rd T= 4%
Interstate 75 T= 11%

YEAR 2031
00 AM PEAK HOUR
(00) PM PEAK HOUR

Moreland Altobelli Associates, Inc.
2211 Beaver Ruin Road
Suite 190
Norcross, Georgia 30071
Telephone (770) 263-5945

CROY ENGINEERING
Engineers Planners Surveyors
200 NORTH COBB PARKWAY, BLDG. 400, SUITE 413
MARIETTA, GA 30062
PHONE: (770) 971-5407 FAX: (770) 971-0620

REVISION DATES		

STATE OF GEORGIA
DEPARTMENT OF TRANSPORTATION
OFFICE:DISTRICT 7

YEAR 2031 PEAK HOUR TRAFFIC
TRAFFIC FLOW DIAGRAM

BIG SHANTY CONNECTOR
PHASE I - P.I. NO. 0006869

DRAWING No. 10-02

GPLN

10/15/2009	10:09:36 AM	PRF	y:\0313 big shanty conn\design\006869 phase 1\dgn\006869c101.dgn	STATE	PROJECT NUMBER	SHEET NO.	TOTAL SHEETS
USER:dwebb		$$PENTABLE$$		GA	CSSTP-0006-00(869)	26	370

MATCH LINE STA. 7+13.00 I-75 S.B. DETOUR
STA. 124+00.00 I-75 N.B. DETOUR, SEE DRAWING 11-03

END CONSTRUCTION
BARRETT LAKES BLVD.
STA. 13+33.75

BEGIN CONSTRUCTION
BIG SHANTY CONN.
STA. 51+26.50

BEGIN PROJECT
STA. 51+00.00
N=1464428.8482
E=2172689.4196

N 14°36'24" W
457.02'

CONSTR. ℄

N 13°55'33" W
440.46'

INTERSECTION
BIG SHANTY CONN. = STA. 56+42.62
SOUTH BOUND I-75 = STA. 32+01.41
N=1464606.3226
E=2173202.1939

BEGIN BRIDGE
STA. 30+96.00

BEGIN SB RAMP DETOUR
STA 12+68.10
36.00 LT

INTERSECTION
BIG SHANTY CONN. = 52+10.42
BARRETT LAKES BLVD = 10+00.00
N=1464464.9650
E=2172793.7680

BEGIN CONSTRUCTION
BARRETT LAKES BLVD.
STA. 5+43.00

PT 25+49.57

I-75 S. BOUND
CONSTR. ℄

N 31°28'54" W
944.73'

PC 6+08.56

I-75 S. BOUND
DETOUR CONSTR. ℄

N 36°35'41.6" W
414.87'

PC 112+62.28

I-75 N. BOUND
CONSTR. ℄

I-75 N. BOUND
DETOUR ℄

CURVE •7

PI 11+76.22

CURVE •4

N 35°02'34.1" W
455.51'

PT 17+38.84

PT 3+45.56

END BRIDGE
STA. 33+34.00

SVX030692

PI 120+20.23

I-75 S. BOUND RAMP DETOUR

N 32°54'43.9" W
201.91'

PC 1+59.63

PC 34+94.29

PI 19+46.76

CURVE •11

PI 3+72.19

PI 2+52.61

CURVE •10

SVX011727

BEGIN MB STA.

N 31°32'08.7" W
1755.89'

END BRIDGE
STA. 133+54.08

SVX030603

INTERSECTION
BIG SHANTY CONN. = 59+24.78
NORTH BOUND I-75 = 132+48.78
N=1464698.6100
E=2173468.8350

BEGIN BRIDGE
STA. 131+51.41

PC 62+74.10

PI 66+92.56

CURVE •1

SVX030708

N 70°54'32" E
1063.59'

50+00
55+00
60+00
65+00
70+00
75+00
0+00
30+00
115+00
120+00
130+00
135+00
25+00

CURVE •11

PI STA. = 2+52.61
N = 1464823.8250
E = 2173160.5370
DELTA = 2°07'50.3"CCW
R = 5000.00'
e = 2.65%
T = 92.98'
L = 185.93'
E = 0.86'

CURVE •10

PI STA. = 120+20.23
N = 1464896.9920
E = 2173157.0655
DELTA = 14°31'09.0" CW
R = 5950.00'
e = 2.30%
T = 757.95'
L = 1507.77'
E = 48.08'

CURVE •4

PI STA. = 41+43.82
N = 1465410.0140
E = 2172710.0460
DELTA = 18°31'42.0"CW
R = 3982.00'
e = 4.0%
T = 649.52'
L = 1287.70'
E = 52.63'

CURVE •1

PI STA. = 66+92.56
N = 1464949.7270
E = 2174194.3860
DELTA = 05°59'23.2"CCW
R = 8000.00'
e = NC
T = 418.55'
L = 836.33'
E = 10.94'

CURVE •7

PI STA. = 11+76.22
N = 1464561.8020
E = 2173403.3260
DELTA = 13°12'59.1"CCW
R = 4900.00'
e = 2.65%
T = 567.66'
L = 1130.28'
E = 32.77'

END CONSTRUCTION
GEORGE BUSBEE PKWY
STA. 12+95.69

PI 71+10.34

N 31°24'55" W

PT 10+15.58

N 64°55'09" E
413.15'

BIG SHANTY CONNECTOR
CONSTR. ℄

INTERSECTION
BIG SHANTY CONN. = 75+23.49
GEORGE BUSBEE PKWY. = 10+00.00

END CONSTRUCTION
BIG SHANTY CONN.
STA. 76+38.89

END PROJECT
STA. 76+50.00
N=1465355.9071
E=2175062.2426

PI 78+07.27

PC 76+62.55

PT 79+47.96

CURVE •2

CONSTR. ℄ GEORGE BUSBEE PKWY.

BEGIN CONSTRUCTION
GEORGE BUSBEE PKWY
STA. 7+54.56

PI 7+30.26

SVX030571

PC 4+28.79

N 0°56'29" E
5+00

CURVE •2

PI STA. = 7+30.26
N = 1465058.3610
E = 2175096.7780
DELTA = 32°23'23.9"CCW
R = 1038.00'
e = 4.00%
T = 301.47'
L = 586.79'
E = 42.89'

MATCH LINE STA. 5+50.00 I-75 S.B. DETOUR
STA. 126+00.00 I-75 N.B. DETOUR
SEE DRAWING 11-02

CONTROL POINTS

POINT	NORTHING	EASTING	ELEV.	DESCRIPTION
SVX030571	1465031.3900	2175111.9700	996.77	X CUT IN CONCRETE
SVX030708	1464991.550	2173979.1000	972.17	LOC. CONTROL DELTA
SVX030603	1464664.3800	2173747.9800	972.21	X-CUT IN CONC.
SVX030692	1464598.6000	2172817.3400	969.32	LOC. CONTROL DELTA
SVX011727	1465246.9992	2143124.4534	1000.19	LOC. CONTROL DELTA

CROY ENGINEERING
Engineers Planners Surveyors
200 NORTH COBB PARKWAY, BLDG. 400, SUITE 413
MARIETTA, GA 30062
PHONE: (770) 971-5407 FAX: (770) 971-0620

SCALE IN FEET
0 100 200 400

REVISION DATES

STATE OF GEORGIA
DEPARTMENT OF TRANSPORTATION
OFFICE: DISTRICT 7

CONSTRUCTION LAYOUT

BIG SHANTY CONNECTOR
PHASE 1

DRAWING No. 11-01

GPLN

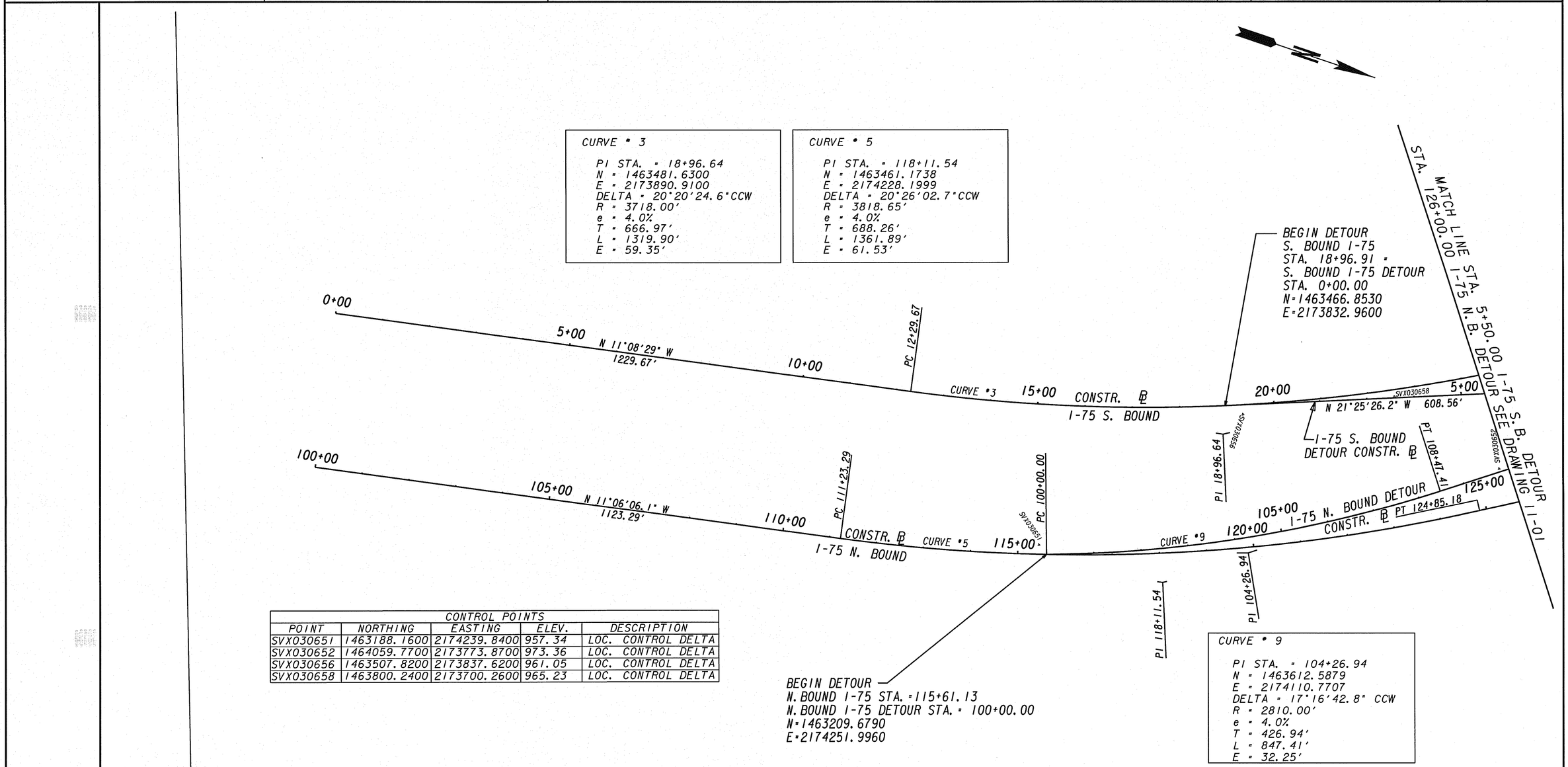

CONTROL POINTS				
POINT	NORTHING	EASTING	ELEV.	DESCRIPTION
SVX030651	1463188.1600	2174239.8400	957.34	LOC. CONTROL DELTA
SVX030652	1464059.7700	2173773.8700	973.36	LOC. CONTROL DELTA
SVX030656	1463507.8200	2173837.6200	961.05	LOC. CONTROL DELTA
SVX030658	1463800.2400	2173700.2600	965.23	LOC. CONTROL DELTA

CROY ENGINEERING
Engineers Planners Surveyors
200 NORTH COBB PARKWAY, BLDG. 400, SUITE 413
MARIETTA, GA 30062
PHONE: (770) 971-5407 FAX: (770) 971-0820

SCALE IN FEET
0 100 200 400

REVISION DATES

STATE OF GEORGIA
DEPARTMENT OF TRANSPORTATION
OFFICE: DISTRICT 7

CONSTRUCTION LAYOUT

BIG SHANTY CONNECTOR
PHASE I

DRAWING No. 11-02

GPLN

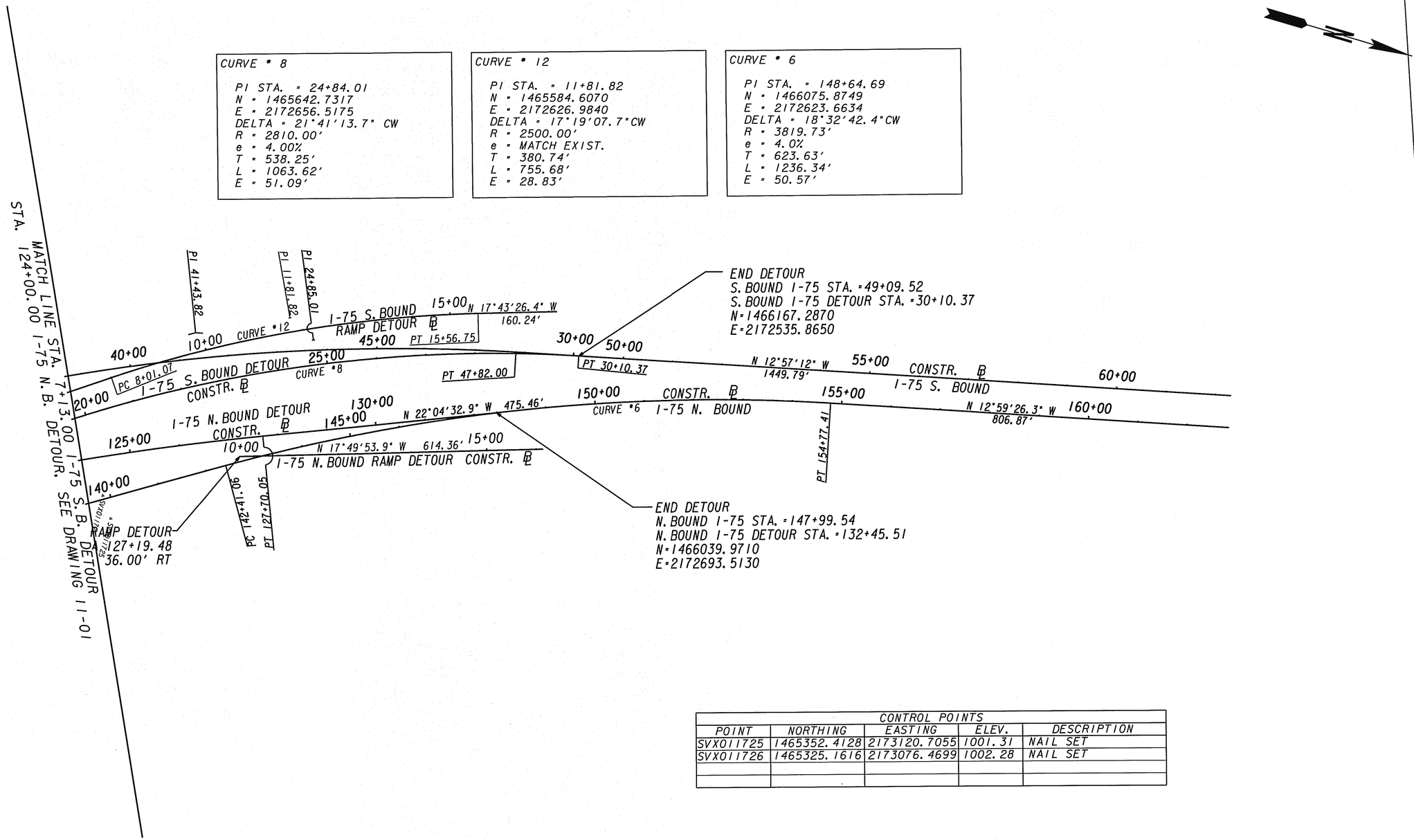

CONTROL POINTS				
POINT	NORTHING	EASTING	ELEV.	DESCRIPTION
SVX011725	1465352.4128	2173120.7055	1001.31	NAIL SET
SVX011726	1465325.1616	2173076.4699	1002.28	NAIL SET

CROY ENGINEERING
Engineers Planners Surveyors
200 NORTH COBB PARKWAY, BLDG. 400, SUITE 413
MARIETTA, GA 30062
PHONE: (770) 971-5407 FAX: (770) 971-0620

SCALE IN FEET
0 100 200 400

REVISION DATES

STATE OF GEORGIA
DEPARTMENT OF TRANSPORTATION
OFFICE: DISTRICT 7

CONSTRUCTION LAYOUT

BIG SHANTY CONNECTOR
PHASE 1

DRAWING No. 11-03

GPLN

10/15/2009 10:34:05 AM	PRF	y:\0313 big shanty conn\design\006869 phase 1\dgn\006869cp01.dgn	STATE	PROJECT NUMBER	SHEET NO.	TOTAL SHEETS
USER:dwebb	$$PENTABLE$$		GA	CSSTP-0006-00(869)	29	370

* NOTE: ALL STATIONING SHALL BE OFF OF BIG SHANTY CONNECTOR UNLESS OTHERWISE NOTED.

MATCH LINE STA. 11+69.00
SEE DRAWING 14-02

1 ROLLINS LEASING CORPORATION

LL 504 / LL 505

L.L.L.

11+66.51
62.15'LT.
(BARRETT LAKES)

11+42.31
75.57'LT.
(BARRETT LAKES)

10+99.20
66.41'LT.
(BARRETT LAKES)

TRACT 2

BEGIN CONC. HEADER CURB TP 3
STA 10+86.00 (BARRETT LAKES)
52.64' LT

10+86.29
65.12'LT.
(BARRETT LAKES)

10+79.33
67.41'LT.
(BARRETT LAKES)

10+67.29
88.70'LT.
(BARRETT LAKES)

END CONC. HEADER CURB TP 3
STA 11+49.50 (BARRETT LAKES)
51.74' LT
MHST. TOP=962.99
INV. IN=959.20(E)
INV. OUT=958.73(S)

2' GRASS STRIP(TYP)

15" RCP

N 13°55'33" W 440.46'

5' SIDEWALK

EXIST. R/W

SVX011719

SVX011718

SVX03306

MATCH EXIST. C&G AND S/W

11+00

.03.00
28.25'RT.

77.63
79.77'L

INSTALL: CURB CUT RAMP GDOT TYPE A (TYP)

ADJUST TO GRADE
REMOVE

STA 5+47.8
56.1' LT

MHST. TOP=960.55
INV. IN=957.12(W)
INV. IN=956.97(N)
INV. OUT=956.22(S)

DCB. TOP=961.20
INV. OUT=958.20

27.81
34.00'L

FILL AND ABANDON

REMOVE EXIST. CURB & GUTTER

R.50'

BEGIN PROJECT
STA 5+00.00
N=1464428.8482
E=2172689.4196

50+00 | 51+00 | 52+00 | 53+00 | 54+00 | 55+00

℄ CONSTR.

95.17'

94.48'

457.02' N 14°36'24" W

BARRETT LAKES BLVD.

℄ CONSTR.

REQ'D R/W

EXIST. R/W

BEGIN CONSTRUCTION
BIG SHANTY CONN.
STA. 51+26.50

EX. FENCE TO BE REMOVED BY OTHERS

BEGIN MILL & OVERLAY
STA. +70.62

SIDEWALKS IN RADII TO BE 6" THICK (TYP)

24.77
45.00'R

DCB. TOP=957.18
INV. OUT=953.35

MHST. TOP=956.
INV. IN=953.0
INV. IN=952.4
INV. IN=951.3
INV. OUT=951.

REMOVE
STA 5+53.6
75.5'RT

FILL AND ABANDON

ADJUST TO GRADE

98.22
27.97'L
9+00

REMOVE

FILL AND ABANDON
43.34
83.62'RT.

DCB. TOP=957.18
INV. OUT=953.17

8+92.50
93.94'LT.
(BARRETT LAKES)

23 SY OF TYPE 3 RIP RAP 2' THICK
COBB COUNTY WATER AUTHORITY

8+67.55
72.72'LT.
(BARRETT LAKES)

END C&G MATCH EXIST.
STA 8+55.47
28.29'L
BARRETT LAKES.

FILL AND ABANDON

REQ'D R/W

MATCH LINE STA. 8+50.00
SEE DRAWING 14-01

INTERSECTION
BIG SHANTY CONN. •52+10.42
BARRETT LAKES BLVD. •10+00.00
N•1464464.9650
E•2172793.7680

2

11+50.00
41.46'RT.

11+50.00
50.00'RT.

53+00.00
97.00'LT.

TRACT 1

54+25.72
110.00'LT.

MATCH LINE
STA. 33+75.00 I-75 S. BOUND
SEE DRAWING 13-06

EXIST. R/W (I-75)

52+70.64
115.34'LT.

BLA, 52+98.50
75.00' LT.

52+98.50
85.00'LT.

REQ'D R/W & L/A

54+31.23
85.00'LT.

STA 52+73
73'LT

97.50
46.00'LT.

2' GRASS STRIP (TYP)

END MILL & OVERLAY
BEGIN FULL DEPTH PAVING
STA 3+38.72

RC 52+95.14
20'

98.50
2.00'RT.

BIG SHANTY CONNECTOR

N 70°54'32" E

STAMPED COLORED CONC. MEDIAN

R 4'

98.50
10.00'RT.

93.50
34.00'RT.

2' GRASS STRIP (TYP)

5' SIDEWALK

INSTALL: CURB CUT RAMP GDOT TYPE A (TYP)

STA 52+75.60
55' RT

BLA, 52+93.15
75.00' RT.

52+93.15
75.00'RT.

52+57.27
107.86'RT.

54+66.51
75.00'RT.

REQ'D R/W & L/A

53+82.00
102.00' RT.

TRACT 2

54+74.94
113.00' RT.

SEDIMENT BASIN GRADING LIMITS

SEDIMENT BASIN •1
BOTTOM 1078 SF
@ ELEV. 950.00
(SEE DWG. 18-01)

53+79.00
145.00' RT.

2
ROBERT McCAMY

EXIST. R/W (I-75)

MATCH LINE STA. 55+30.00
SEE DRAWING 13-02

LL 504 / LL 505

L.L.L.

PROPERTY AND EXISTING R/W LINE	------℄------
REQUIRED R/W LINE	———
CONSTRUCTION LIMITS	--C--F--
EASEMENT FOR CONSTR & MAINTENANCE OF SLOPES	
EASEMENT FOR CONSTR OF SLOPES	
EASEMENT FOR CONSTR OF DRIVES	

BEGIN LIMIT OF ACCESS	BLA
END LIMIT OF ACCESS	ELA
LIMIT OF ACCESS	
REQ'D R/W & LIMIT OF ACCESS	
ENVIRONMENTAL SENSITIVE AREA	

CROY ENGINEERING
Engineers Planners Surveyors
200 NORTH COBB PARKWAY, BLDG. 400, SUITE 413
MARIETTA, GA 30062
PHONE: (770) 971-5407 FAX: (770) 971-0620

SCALE IN FEET
0 20 40 80

REVISION DATES
10/01/09

STATE OF GEORGIA
DEPARTMENT OF TRANSPORTATION
OFFICE: DISTRICT 7

MAINLINE PLAN

BIG SHANTY CONNECTOR
PHASE 1

DRAWING No. 13-01

GPLN

STATE	PROJECT NUMBER	SHEET NO.	TOTAL SHEETS
GA	CSSTP-0006-00(869)	30	370

MATCH LINE STA. 33+75.00 I-75 S. BOUND
SEE DRAWING 13-07

MATCH LINE STA. 134+00.00
SEE DRAWING 13-07

MATCH LINE STA. 55+30.00
SEE DRAWING 13-01

MATCH LINE STA. 61+10.00
SEE DRAWING 13-03

MATCH LINE STA. 30+50.00
SEE DRAWING 13-06

MATCH LINE STA. 131+00.00
SEE DRAWING 13-06

BEG. "W" BEAM G'RAIL GDOT STD. 4010 STA. 33+65.53 LT.

BEG. "W" BEAM G'RAIL GDOT STD. 4010 STA. 33+51.66 RT.

CONNECT "T" BEAM G'RAIL AT BRIDGE GDOT STD. 4012C

30' CONCRETE APPROACH SLAB

END BRIDGE STA. 33+34.00

CONNECT "T" BEAM G'RAIL AT BRIDGE GDOT 4012C

CONSTR. ℄ I-75 SB LANE

INSTALL SHORING PER BRIDGE PLANS

PROPOSED I-75 SB BRIDGE SEE BRIDGE PLANS

SLOPE PAVING UNDER EACH BRIDGE (TYP)

INTERSECTION BIG SHANTY CONN.·56+42.62 I-75 SB LANE ·32+01.41 N·1464606.3226 E·2173202.1939

BEGIN TAPER 56+48.50 2.00' RT.

END "W" BEAM G'RAIL GDOT STD. 4010 STA. 133+77.29 LT.

BEG. "W" BEAM G'RAIL GDOT STD. 4010 STA. 133+64.79 RT.

"T" BEAM G'RAIL CONNECT AT BRIDGE GDOT STD. 4012C

INSTALL SHORING PER BRIDGE PLANS

INTERSECTION BIG SHANTY CONN.·59+24.78 I-75 NB LANE·132+48.78 N·1464698.6100 E·2173468.8350

CONSTR. ℄ I-75 NB

G'RAIL ANCHOR TP. 1 GDOT STD. 4012D

30' CONCRETE APPROACH SLAB

END BRIDGE STA. 133+54.08

N 31°32'08.7" W 1758.89'

G'RAIL ANCHOR TP. 1 GDOT STD. 4012D

END "W" BEAM G'RAIL GDOT STD. 4010 STA. 133+63.32 RT.

BEG. "W" BEAM G'RAIL GDOT STD. 4010 STA. 133+50.82 RT.

"T" BEAM G'RAIL CONNECT AT BRIDGE GDOT STD. 4012C

PROPOSED I-75 NB BRIDGE SEE BRIDGE PLANS

ESA-25' STREAM BUFFER

WRESTED VEGETATION STREAM 6

60+89 - 85.00' LT.

25' ESA-25' STREAM BUFFER

B-1.1

B-1

TRIPLE 4'X 2.5' BOX CULVERT

BEGIN TAPER 56+48.50 46.00' LT.

END TAPER 57+48.50 34.00' LT.

END TAPER 57+48.50 10.00' LT.

2' GRASS STRIP (TYP)

24.00'

20.00'

56+00

57+00

58+00

59+00

60+00

61+00

77.61'

102.45'

CONSTR. ℄ BIG SHANTY CONNECTOR N 70°54'32" E

GRASS MEDIAN

STAMPED COLORED CONC. MEDIAN

STAMPED CONC. MEDIAN

8.00'

END CONCRETE BEGIN GRASS STA 56+90.32

END GRASS BEGIN CONCRETE STA 59+11.26

SLOPE PAVING UNDER EACH BRIDGE (TYP)

END CONCRETE BEGIN GRASS STA 59+79.34

ENC 55+51.32 2.00'

A-8.1 A-8.18 A-9.1 A-11

A-8 A-9 A-10

18"

5' SIDEWALK

BRIDGE COLUMN SEE BRIDGE PLANS

INSTALL SHORING PER BRIDGE PLANS

BEGIN BRIDGE STA. 30+96.00

BEG. "T" BEAM G'RAIL GDOT STD. 4012C STA. 30+84.86 RT.

BEG. "W" BEAM G'RAIL GDOT STD. 4010 STA. 30+72.36 RT.

CONC. SPILLWAY GA STD. 9017J TP 1

15" SLOPE DRAIN PIPE

G'RAIL ANCHOR TP. 1 GDOT STD. 4012D

30' CONCRETE APPROACH SLAB

BEG. "T" BEAM G'RAIL GDOT STD. 4012C STA. 30+98.76 LT.

BEG. "W" BEAM G'RAIL GDOT STD. 4010 STA. 30+86.26 LT.

G'RAIL ANCHOR TP. 1 GDOT STD. 4012D

LL 504 LL 505 LL 504 LL 503

BEGIN BRIDGE STA. 131+51.41

BEG. "T" BEAM G'RAIL GDOT STD. 4012C STA. 131+33.32 LT.

"T" BEAM G'RAIL GDOT STD. 4012C CONNECT AT BRIDGE

30' CONCRETE APPROACH SLAB

BEG. "T" BEAM G'RAIL GDOT STD. 4012C STA. 131+19.36 RT.

CONC. SPILLWAY GA STD. 9017J TP 1

15" SLOPE DRAIN PIPE

PROPERTY AND EXISTING R/W LINE
REQUIRED R/W LINE
CONSTRUCTION LIMITS
EASEMENT FOR CONSTR & MAINTENANCE OF SLOPES
EASEMENT FOR CONSTR OF SLOPES
EASEMENT FOR CONSTR OF DRIVES

BEGIN LIMIT OF ACCESS.....BLA
END LIMIT OF ACCESS.....ELA
LIMIT OF ACCESS
REQ'D R/W & LIMIT OF ACCESS
ENVIRONMENTAL SENSITIVE AREA

CROY ENGINEERING
Engineers Planners Surveyors
200 NORTH COBB PARKWAY, BLDG. 400, SUITE 413
MARIETTA, GA 30062
PHONE: (770) 971-5407 FAX: (770) 971-0620

SCALE IN FEET
0 20 40 80

REVISION DATES

STATE OF GEORGIA
DEPARTMENT OF TRANSPORTATION
OFFICE: DISTRICT 7

MAINLINE PLAN

BIG SHANTY CONNECTOR
PHASE 1

DRAWING No. 13-02

GPLN

10/15/2009 10:34:11 AM PRF	y:\0313 big shanty conn\design\006869 phase 1\dgn\006869cp03.dgn	STATE	PROJECT NUMBER	SHEET NO.	TOTAL SHEETS
USER:dwebb $$PENTABLE$$		GA	CSSTP-0006-00(869)	31	370

TRE PROPERTIES, INC.

61+10.00 85.00' LT.
61+10.00 75.55' LT.
61+50.00 76.00' LT.
61+10.00 60.00' LT.
63+00.00 76.00' LT.
65+00.00 69.00' LT.
66+00.00 60.00' LT.
62+74.01 60.00' LT.
62+74.01 60.00' RT.
62+93.00 78.00' RT.
62+93.00 163.00' RT.
62+00.00 163.00' RT.
61+21.01 60.00' RT.
61+55.00 214.45' RT.
65+55.00 60.00' RT.
66+41.00 60.00' RT.
65+00.00 75.00' RT.

(EXISTING) 3 — B-2.3
DDI, TOP=970.60
INV. IN 964.40 18"CMP
INV. OUT 964.40 18"CMP

MHST. TOP=972.34
INV. IN=965.83(S)
INV. IN=965.91(NW)
INV. IN=965.91(NE)
INV. OUT=965.97(SE)

DDI, TOP=970.52
INV. IN=967.23(W)
INV. OUT=967.19(E)

DDI, TOP=970.59
INV. OUT=966.52

DDI, TOP=971.90
INV. IN=966.86(W)
INV. OUT=966.73(E)

DDI, TOP=972.43
INV. IN=967.19(W)
INV. OUT=967.19(E)

DDI, TOP=972.25
INV. OUT=967.00

DDI, TOP=973.01
INV. OUT=967.54
12" PVC

MHST. TOP=972.25
INV. IN=966.35(NW)
INV. IN=966.39(NW)
INV. OUT=966.28(SE)

DDI, TOP=970.67
INV. IN=965.37(W)
INV. IN=964.91(W)
INV. OUT=964.90(SE)

DDI, TOP=970.58
INV. IN=963.02(N)
INV. OUT=962.91(S)

DDI, TOP=968.31
INV. IN 960.91 24" CMP
INV. OUT 960.91 30" CMP

DDI, TOP=970.60
INV. IN 962.00 18"CMP
INV. OUT 962.00 30"CMP

PC 62+74.01
TRACT 1 — B-2.2
TRACT 2
TRACT 3
REQ'D R/W & L/A
EX. MANHOLE
REMOVE
REMOVE PIPE
2' GRASS STRIP (TYP)
2' GRASS STRIP (TYP)
CONSTR. ℄ BIG SHANTY CONNECTOR
N 70°54'32" E
CURVE #1
BEGIN TAPER 63+76.42 10.00'RT.
END GRASS BEGIN CONCRETE STA 64+33.20
END TAPER 64+76.30 2.00'RT.
STAMPED COLORED CONC. MEDIAN
18' 5' SIDEWALK
INSTALL HEADER CURB
PARK AND RIDE BUS STOP
INSTALL HEADER CURB
SEDIMENT BASIN #2 GRADING LIMITS (SEE DWG. 18-02)
SEDIMENT BASIN BOTTOM 8' X 16' @ ELEV. 956.00
EXIST. R/W & L/A
STREAM 6
25' STREAM BUFFER
ESA-25' STREAM BUFFER
24" RCP
12" PVC
18" CMP
B-2.1 B-1A B-2 B-3.1 B-3 D-1.1 D-1
SV:K030706
SV:K030707
SV:K030708
SV:K030709
SV:K030713
2400'
3600'
8.00'
20.00'
24'
18'
36"

CURVE #1
PI STA. = 66+92.56
N = 1464949.7270
E = 2174194.3860
DELTA = 05°59'23.2"CCW
R = 8000.00'
e = NC
T = 418.55'
L = 836.33'
E = 10.94'

MATCH LINE STA. 61+10.00 SEE DRAWING 13-02

MATCH LINE STA. 66+70.00 SEE DRAWING 13-04

PROPERTY AND EXISTING R/W LINE	BEGIN LIMIT OF ACCESS.....BLA
REQUIRED R/W LINE	END LIMIT OF ACCESS.....ELA
CONSTRUCTION LIMITS	LIMIT OF ACCESS
EASEMENT FOR CONSTR & MAINTENANCE OF SLOPES	REQ'D R/W & LIMIT OF ACCESS
EASEMENT FOR CONSTR OF SLOPES	ENVIRONMENTAL SENSITIVE AREA
EASEMENT FOR CONSTR OF DRIVES	

CROY ENGINEERING
Engineers Planners Surveyors
200 NORTH COBB PARKWAY, BLDG. 400, SUITE 413
MARIETTA, GA 30062
PHONE: (770) 971-5407 FAX: (770) 971-0620

SCALE IN FEET
0 20 40 80

REVISION DATES

STATE OF GEORGIA
DEPARTMENT OF TRANSPORTATION
OFFICE: DISTRICT 7

MAINLINE PLAN

BIG SHANTY CONNECTOR
PHASE 1

DRAWING No. 13-03

GPLN

10/15/2009	10:34:13 AM	PRF	y:\0313 big shanty conn\design\006869 phase 1\dgn\006869cp04.dgn	STATE	PROJECT NUMBER	SHEET NO.	TOTAL SHEETS
USER:dwebb		$$PENTABLE$$		GA	CSSTP-0006-00(869)	32	370

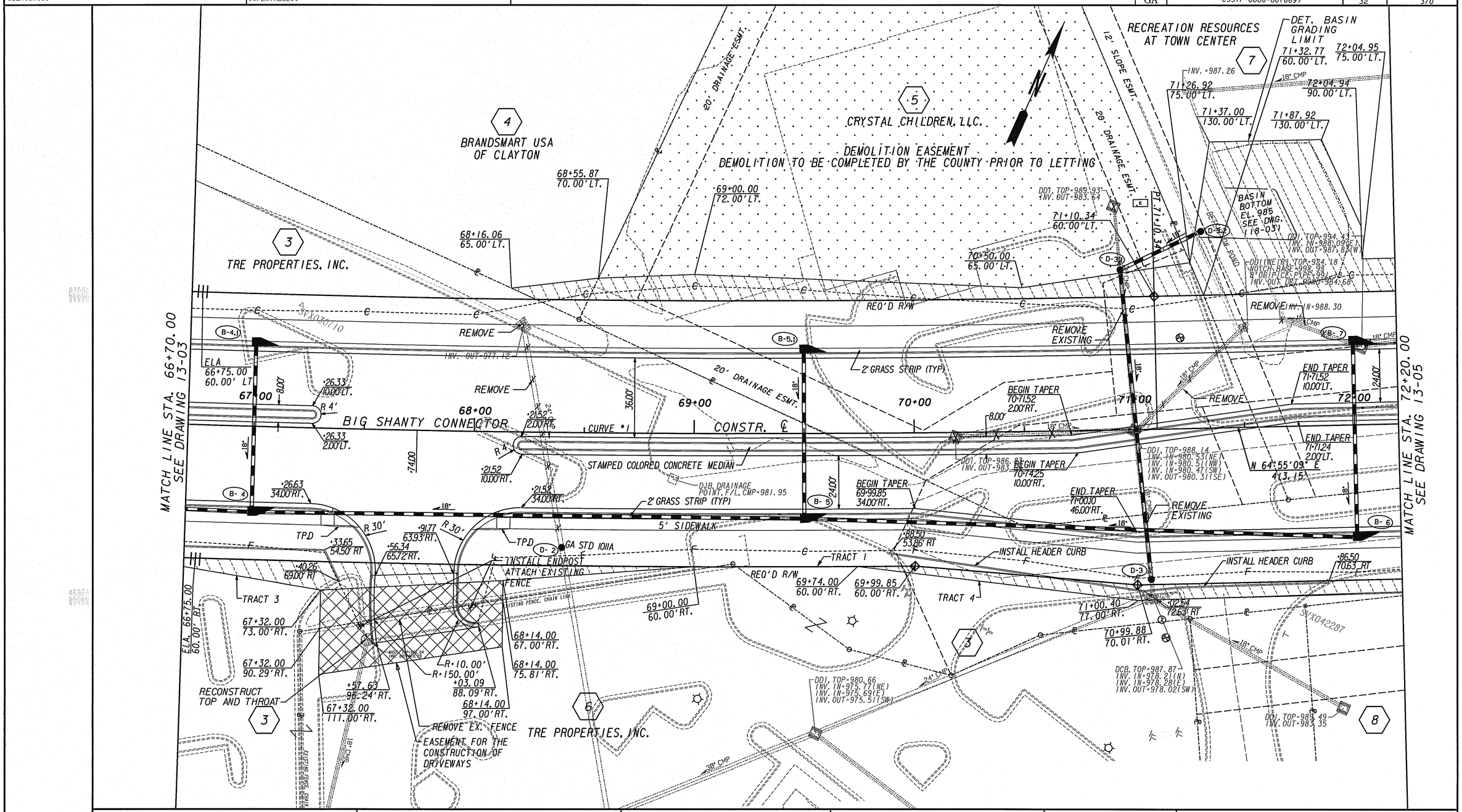

PROPERTY AND EXISTING R/W LINE	------℄------
REQUIRED R/W LINE	———
CONSTRUCTION LIMITS	--C--F--
EASEMENT FOR CONSTR & MAINTENANCE OF SLOPES	
EASEMENT FOR CONSTR OF SLOPES	
EASEMENT FOR CONSTR OF DRIVES	

BEGIN LIMIT OF ACCESS	BLA
END LIMIT OF ACCESS	ELA
LIMIT OF ACCESS	
REQ'D R/W & LIMIT OF ACCESS	
ENVIRONMENTAL SENSITIVE AREA	

CROY ENGINEERING
Engineers Planners Surveyors
200 NORTH COBB PARKWAY, BLDG. 400, SUITE 413
MARIETTA, GA 30062
PHONE: (770) 971-5407 FAX: (770) 971-0620

SCALE IN FEET
0 20 40 80

REVISION DATES		

STATE OF GEORGIA
DEPARTMENT OF TRANSPORTATION
OFFICE: DISTRICT 7

MAINLINE PLAN

BIG SHANTY CONNECTOR
PHASE I

DRAWING No. 13-04

GPLN

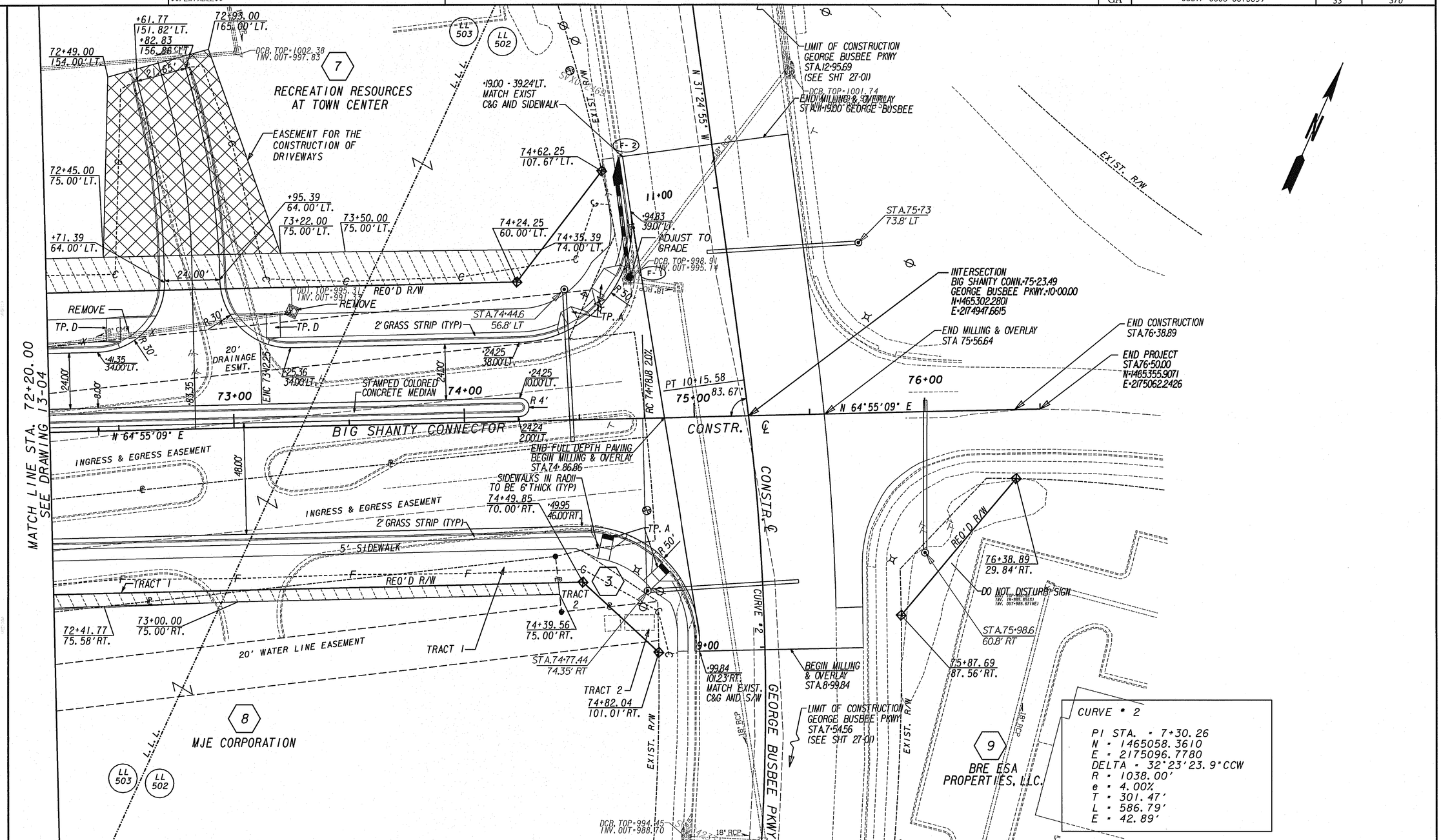

PROPERTY AND EXISTING R/W LINE	
REQUIRED R/W LINE	
CONSTRUCTION LIMITS	
EASEMENT FOR CONSTR & MAINTENANCE OF SLOPES	
EASEMENT FOR CONSTR OF SLOPES	
EASEMENT FOR CONSTR OF DRIVES	
BEGIN LIMIT OF ACCESS	BLA
END LIMIT OF ACCESS	ELA
LIMIT OF ACCESS	
REQ'D R/W & LIMIT OF ACCESS	
ENVIRONMENTAL SENSITIVE AREA	

CROY ENGINEERING
Engineers Planners Surveyors
200 NORTH COBB PARKWAY, BLDG. 400, SUITE 413
MARIETTA, GA 30062
PHONE: (770) 971-5407 FAX: (770) 971-0620

SCALE IN FEET
0 20 40 80

REVISION DATES		
10/01/09		

STATE OF GEORGIA
DEPARTMENT OF TRANSPORTATION
OFFICE: DISTRICT 7

MAINLINE PLAN

BIG SHANTY CONNECTOR
PHASE 1

DRAWING No. 13-05

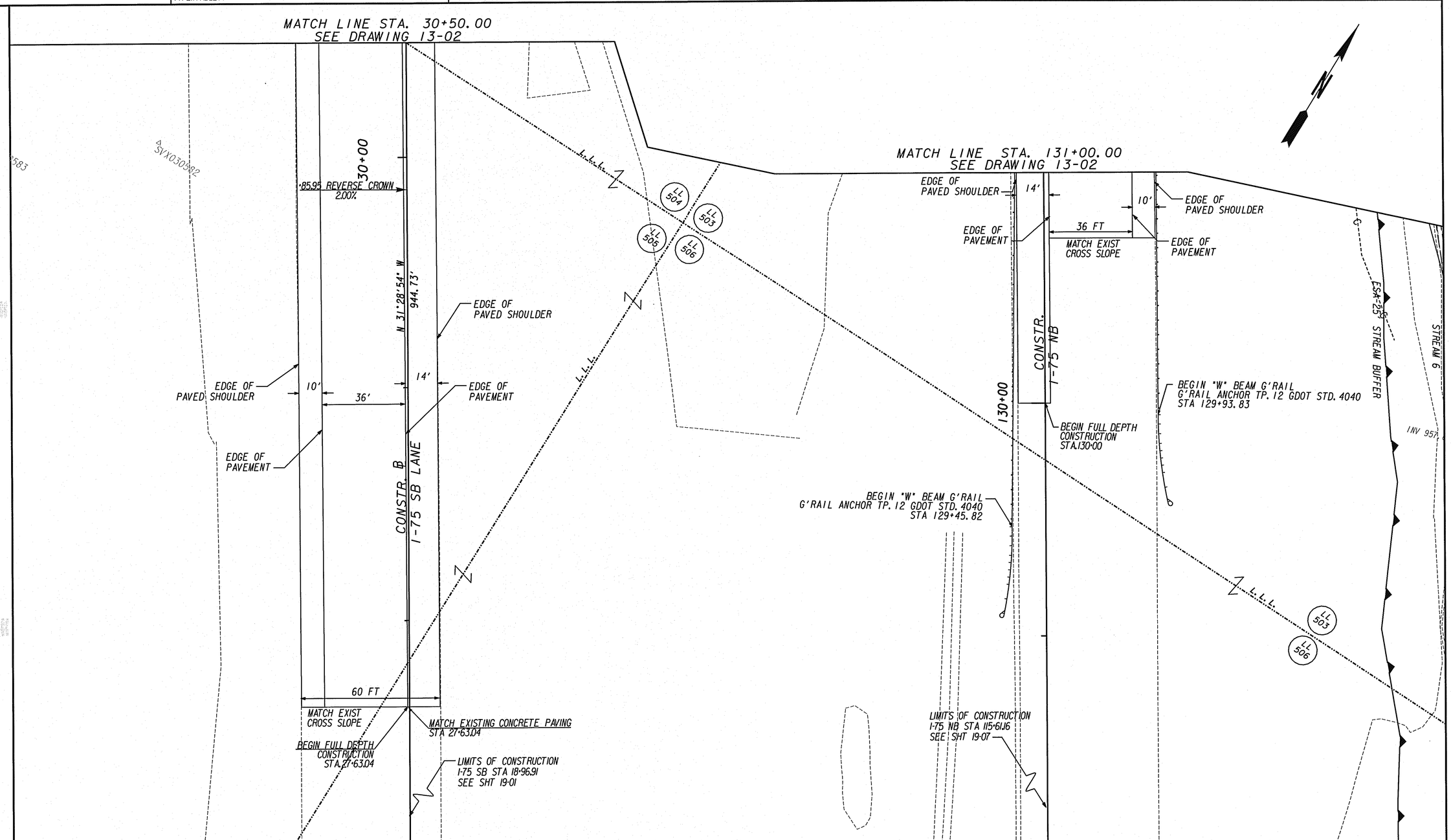

PROPERTY AND EXISTING R/W LINE
REQUIRED R/W LINE
CONSTRUCTION LIMITS
EASEMENT FOR CONSTR & MAINTENANCE OF SLOPES
EASEMENT FOR CONSTR OF SLOPES
EASEMENT FOR CONSTR OF DRIVES

BEGIN LIMIT OF ACCESS.....BLA
END LIMIT OF ACCESS.....ELA
LIMIT OF ACCESS
REQ'D R/W & LIMIT OF ACCESS
ESA BOUNDARY

CROY ENGINEERING
Engineers Planners Surveyors
200 NORTH COBB PARKWAY, BLDG. 400, SUITE 413
MARIETTA, GA 30062
PHONE: (770) 971-5407 FAX: (770) 971-0620

SCALE IN FEET
0 20 40 80

REVISION DATES

STATE OF GEORGIA
DEPARTMENT OF TRANSPORTATION
OFFICE: DISTRICT 7

MAINLINE PLAN

BIG SHANTY CONNECTOR
PHASE 1

DRAWING No. 13-06

GPLN

STATE	PROJECT NUMBER	SHEET NO.	TOTAL SHEETS
GA	CSSTP-0006-00(869)	35	370

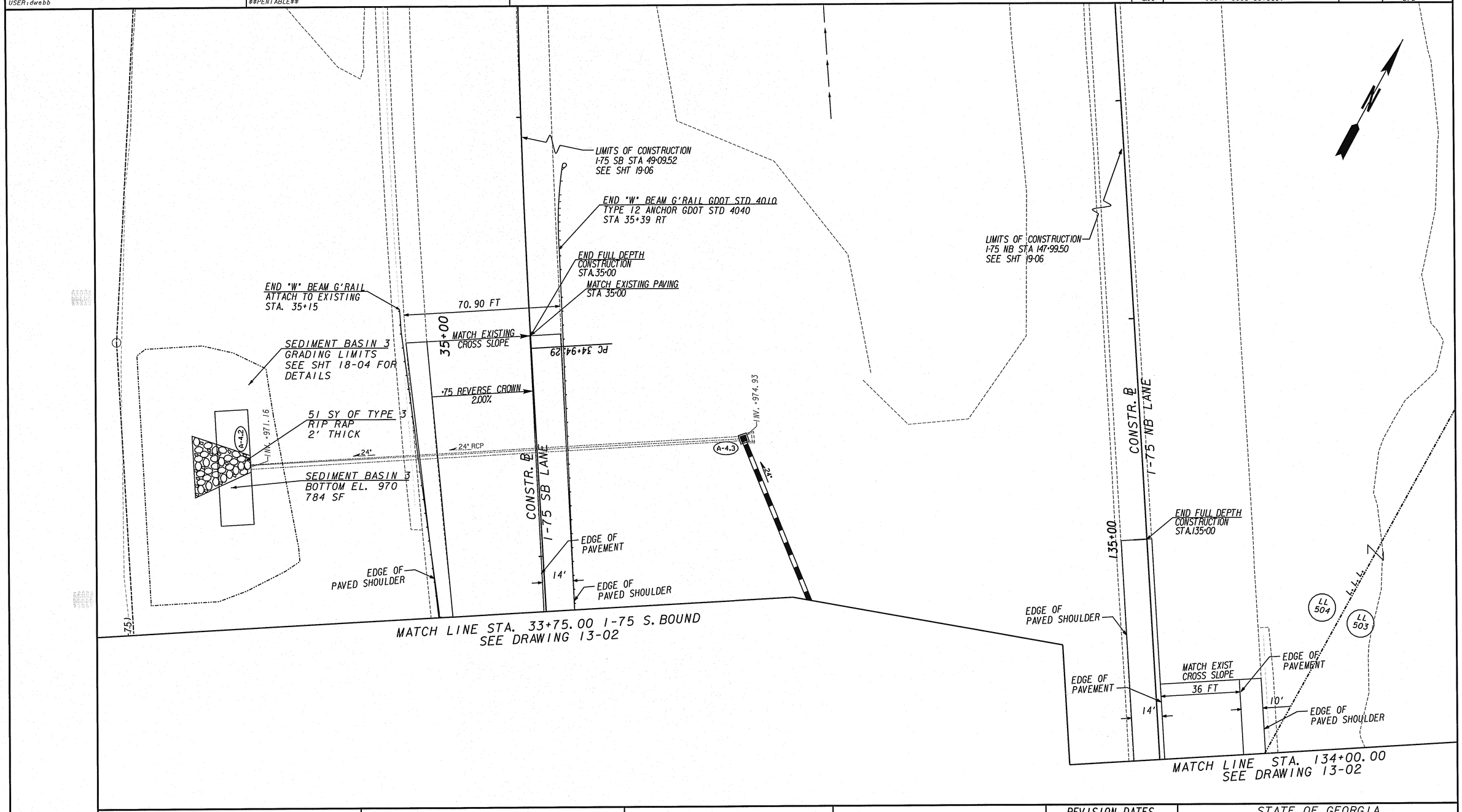

PROPERTY AND EXISTING R/W LINE -----P-----
REQUIRED R/W LINE ———
CONSTRUCTION LIMITS --C--F--
EASEMENT FOR CONSTR & MAINTENANCE OF SLOPES
EASEMENT FOR CONSTR OF SLOPES
EASEMENT FOR CONSTR OF DRIVES

BEGIN LIMIT OF ACCESS.....BLA
END LIMIT OF ACCESS.....ELA
LIMIT OF ACCESS
REQ'D R/W & LIMIT OF ACCESS
ENVIRONMENTAL SENSITIVE AREA

CROY ENGINEERING Engineers Planners Surveyors
200 NORTH COBB PARKWAY, BLDG. 400, SUITE 413
MARIETTA, GA 30062
PHONE: (770) 971-5407 FAX: (770) 971-0620

SCALE IN FEET
0 20 40 80

REVISION DATES

STATE OF GEORGIA
DEPARTMENT OF TRANSPORTATION
OFFICE: DISTRICT 7

MAINLINE PLAN

BIG SHANTY CONNECTOR
PHASE 1

DRAWING No. 13-07

GPLN

10/15/2009 10:34:23 AM	PRF	y:\0313 big shanty conn\design\006869 phase 1\dgn\006869xr01.dgn	STATE	PROJECT NUMBER	SHEET NO.	TOTAL SHEETS
USER:dwebb	$$PENTABLE$$		GA	CSSTP-0006-00(869)	36	370

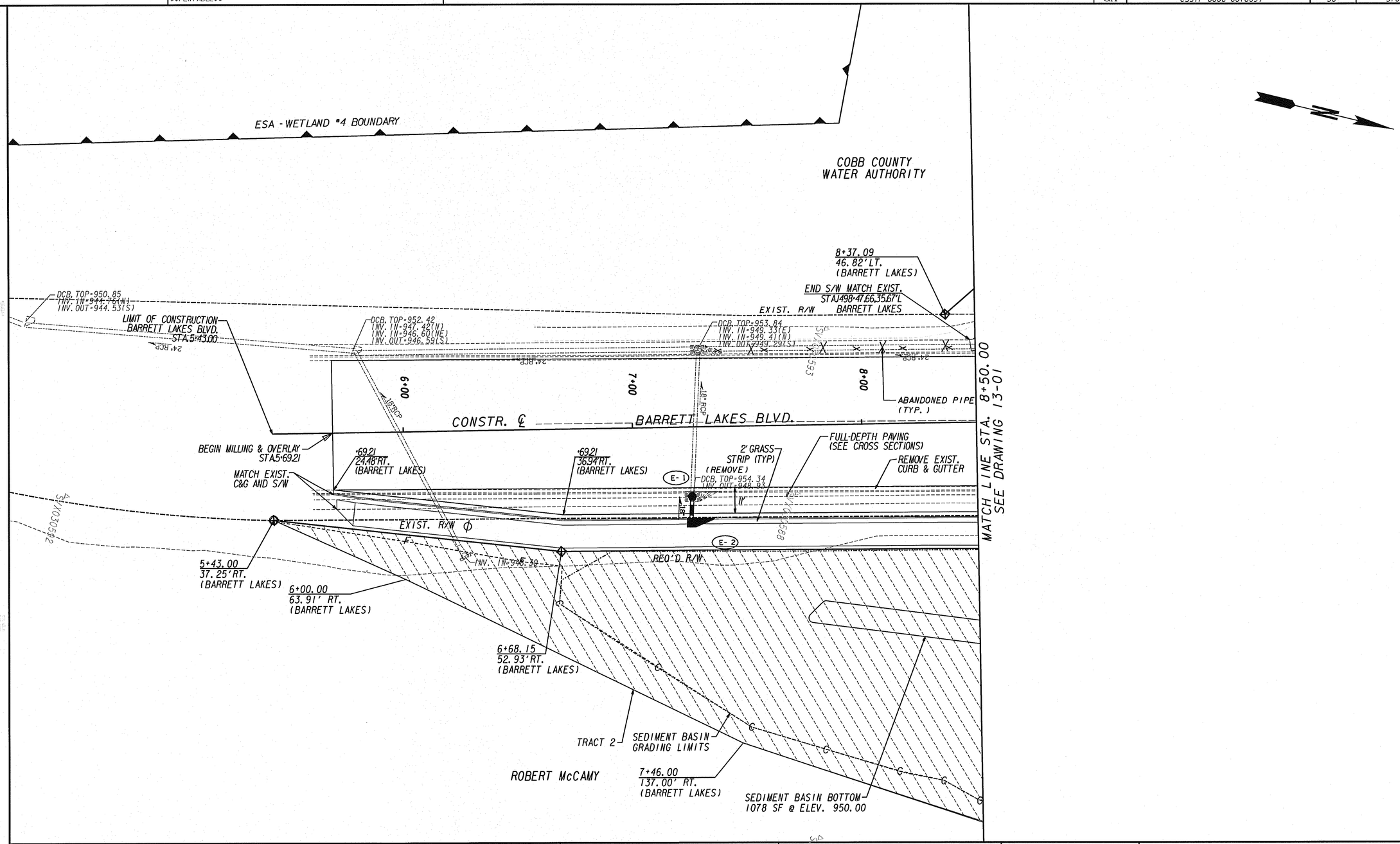

PROPERTY AND EXISTING R/W LINE
REQUIRED R/W LINE
CONSTRUCTION LIMITS
EASEMENT FOR CONSTR & MAINTENANCE OF SLOPES
EASEMENT FOR CONSTR OF SLOPES
EASEMENT FOR CONSTR OF DRIVES

BEGIN LIMIT OF ACCESS.....BLA
END LIMIT OF ACCESS.....ELA
LIMIT OF ACCESS
REO'D R/W & LIMIT OF ACCESS
ENVIRONMENTAL SENSITIVE AREA

CROY ENGINEERING
Engineers Planners Surveyors
200 NORTH COBB PARKWAY, BLDG. 400, SUITE 413
MARIETTA, GA 30062
PHONE: (770) 971-5407 FAX: (770) 971-0620

SCALE IN FEET
0 20 40 80

REVISION DATES		
10/01/09		

STATE OF GEORGIA
DEPARTMENT OF TRANSPORTATION
OFFICE: DISTRICT 7

CROSSROAD PLAN
BARRETT LAKES BLVD.

BIG SHANTY CONNECTOR
PHASE 1

DRAWING No. 14-01

10/15/2009	10:34:25 AM	PRF	y:\0313 big shanty conn\design\006869 phase 1\dgn\006869xr02.dgn	STATE	PROJECT NUMBER	SHEET NO.	TOTAL SHEETS
USER:dwebb		$$PENTABLE$$		GA	CSSTP-0006-00(869)	37	370

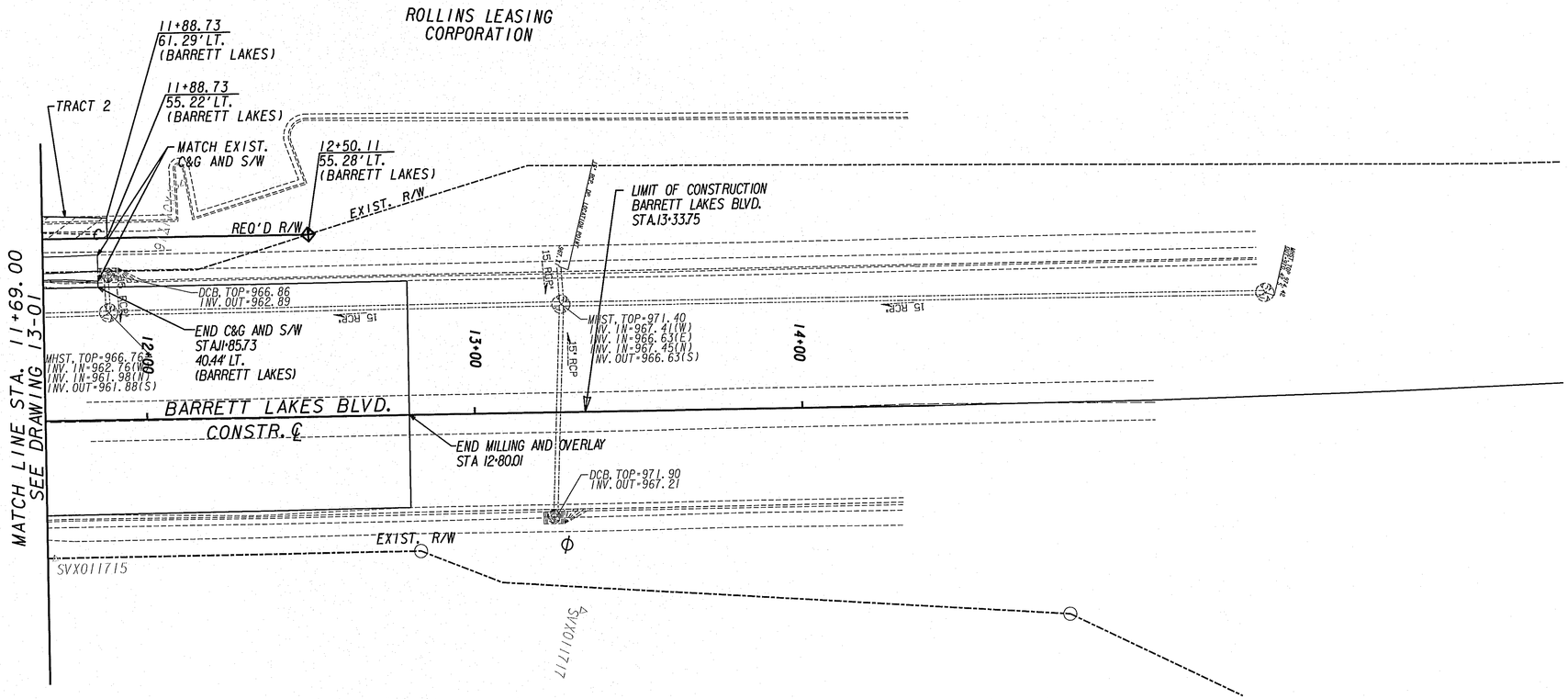

PROPERTY AND EXISTING R/W LINE
REQUIRED R/W LINE
CONSTRUCTION LIMITS
EASEMENT FOR CONSTR & MAINTENANCE OF SLOPES
EASEMENT FOR CONSTR OF SLOPES
EASEMENT FOR CONSTR OF DRIVES

BEGIN LIMIT OF ACCESS.....BLA
END LIMIT OF ACCESS.....ELA
LIMIT OF ACCESS
REQ'D R/W & LIMIT OF ACCESS
ENVIRONMENTAL SENSITIVE AREA

CROY ENGINEERING
Engineers Planners Surveyors
200 NORTH COBB PARKWAY, BLDG. 400, SUITE 413
MARIETTA, GA 30062
PHONE: (770) 971-5407 FAX: (770) 971-0620

SCALE IN FEET
0 20 40 80

REVISION DATES		

STATE OF GEORGIA
DEPARTMENT OF TRANSPORTATION
OFFICE: DISTRICT 7

CROSSROAD PLAN
BARRETT LAKES BLVD.

BIG SHANTY CONNECTOR
PHASE 1

DRAWING No. 14-02

GPLN

10/15/2009 10:34:27 AM	PRF	y:\0313 big shanty conn\design\006869 phase 1\dgn\006869pr01.dgn	STATE	PROJECT NUMBER	SHEET NO.	TOTAL SHEETS
USER:dwebb	$$PENTABLE$$		GA	CSSTP-0006-00(869)	38	370

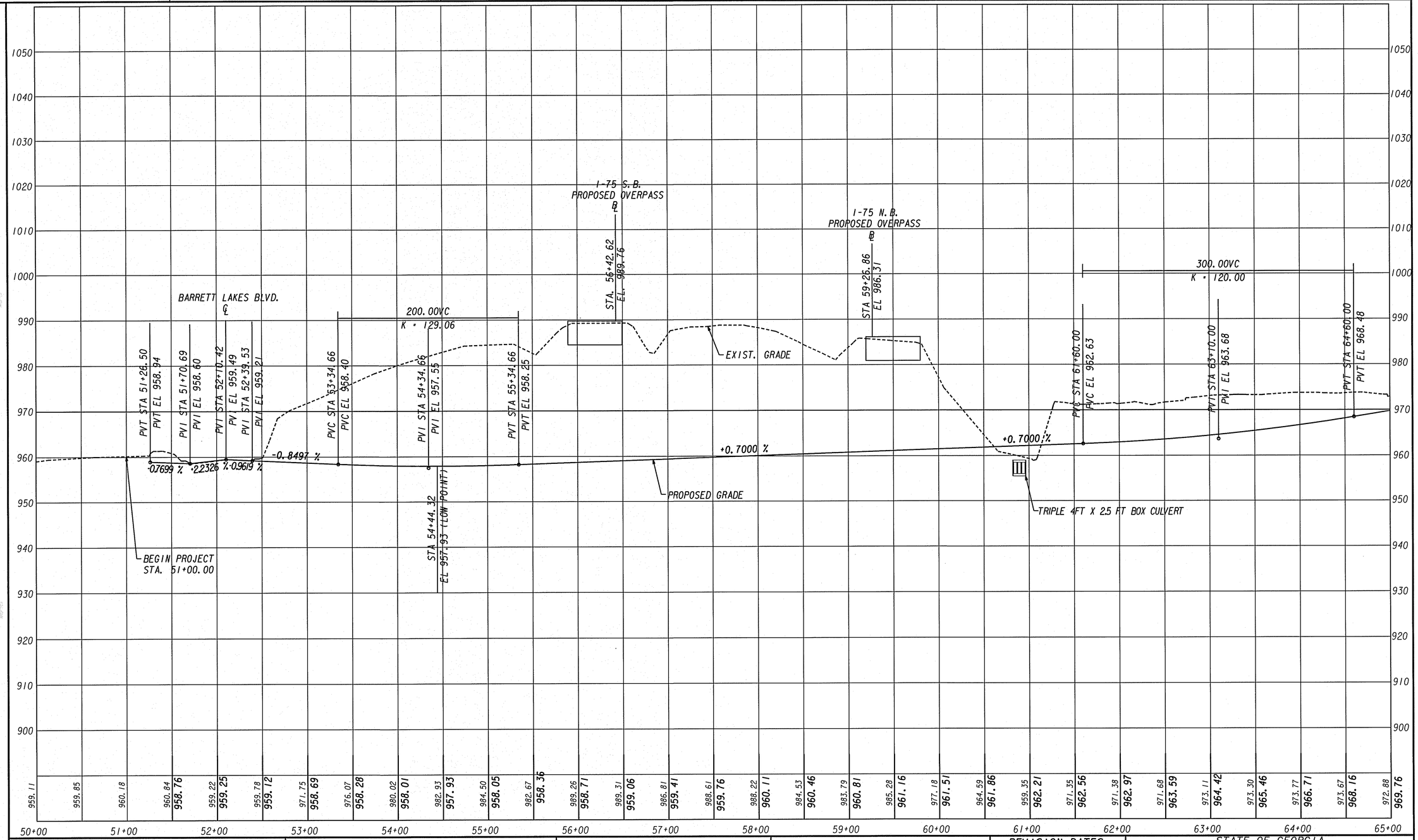

REVISION DATES		

STATE OF GEORGIA
DEPARTMENT OF TRANSPORTATION
OFFICE: DISTRICT 7

MAINLINE PROFILE

BIG SHANTY CONNECTOR
PHASE 1

DRAWING No. 15-01

3/11/2007 GRIEDG

10/15/2009 10:34:27 AM	PRF	y:\0313 big shanty conn\design\006869 phase 1\dgn\006869pr01.dgn	STATE	PROJECT NUMBER	SHEET NO.	TOTAL SHEETS
USER:dwebb	$$PENTABLE$$		GA	CSSTP-0006-00(869)	39	370

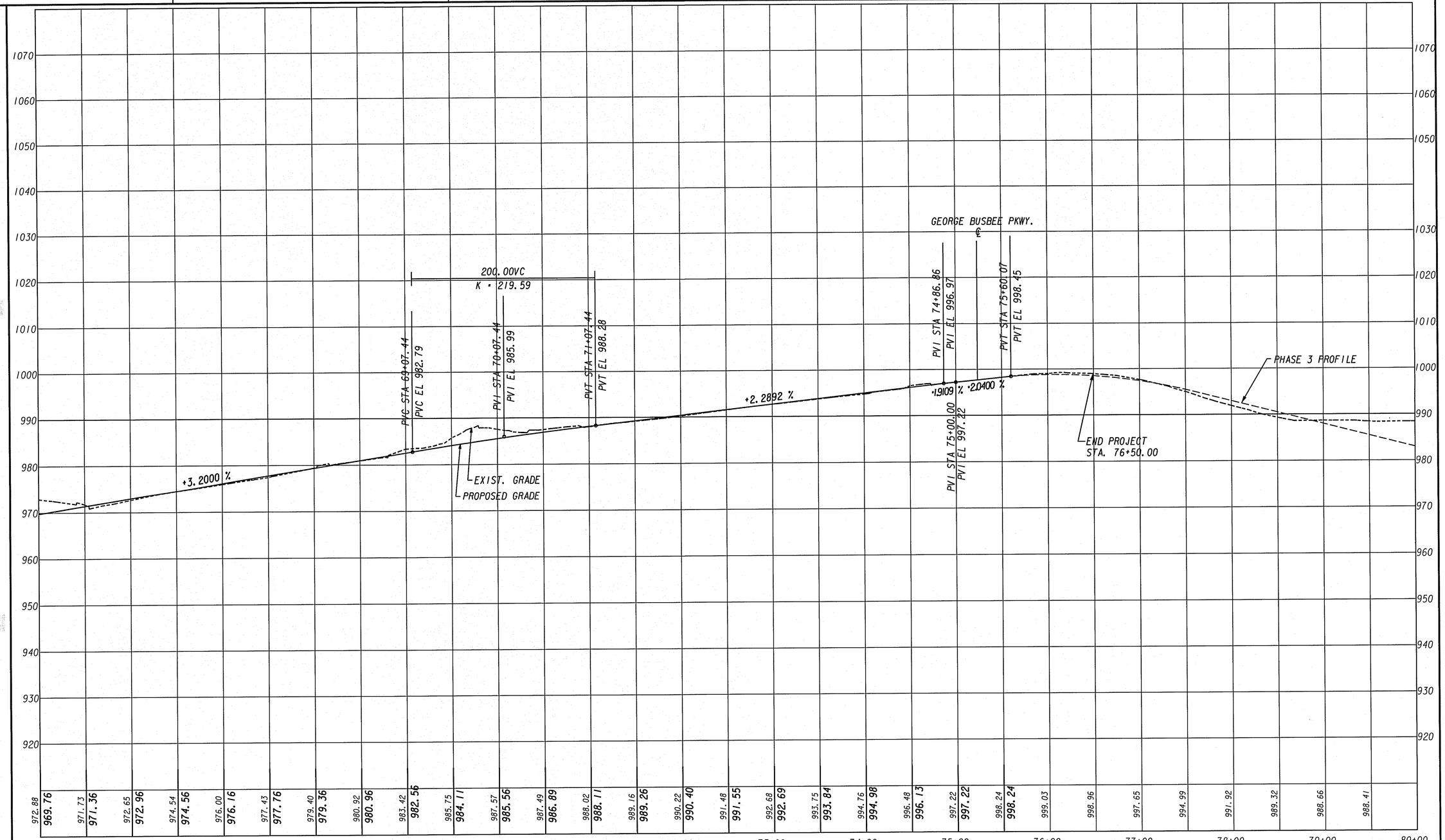

REVISION DATES		

STATE OF GEORGIA
DEPARTMENT OF TRANSPORTATION

OFFICE: DISTRICT 7

MAINLINE PROFILE

BIG SHANTY CONNECTOR
PHASE 1

DRAWING No. 15-02

3/1/2007 GRIEDG

10/15/2009	10:34:27 AM	PRF	y:\0313 big shanty conn\design\006869 phase 1\dgn\006869xp01.dgn	STATE	PROJECT NUMBER	SHEET NO.	TOTAL SHEETS
USER:dwebb		$$PENTABLE$$		GA	CSSTP-0006-00(869)	40	370

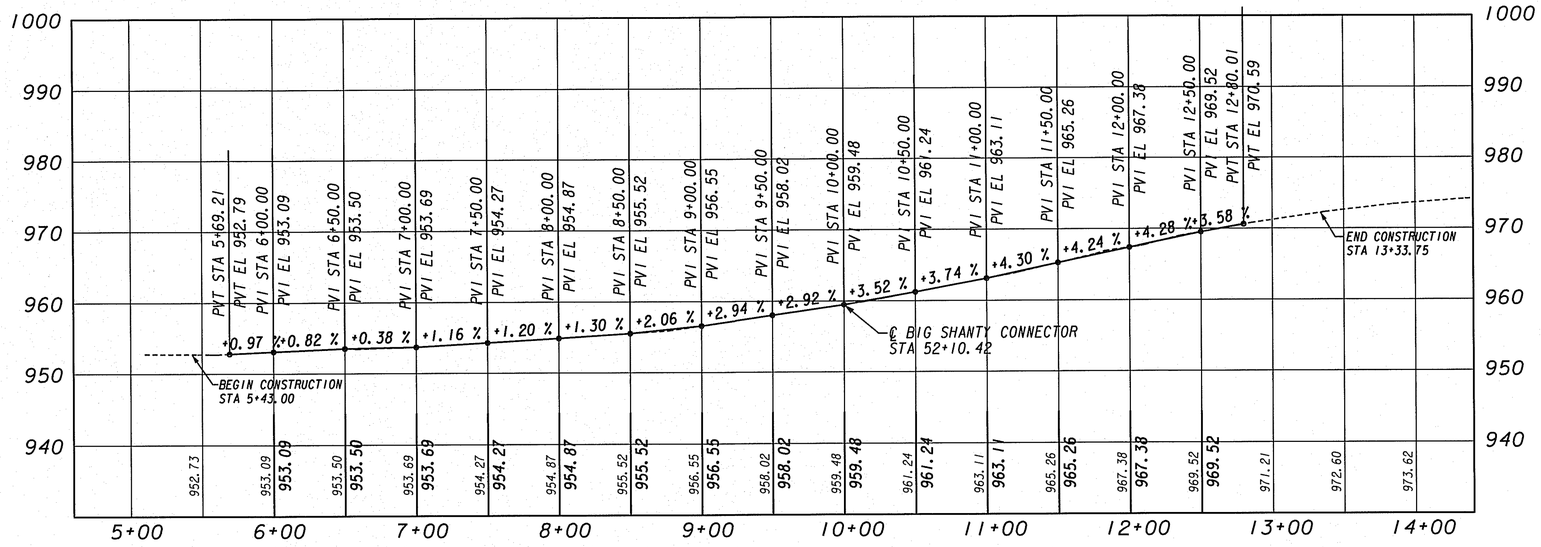

BARRETT LAKES BLVD. PROFILE

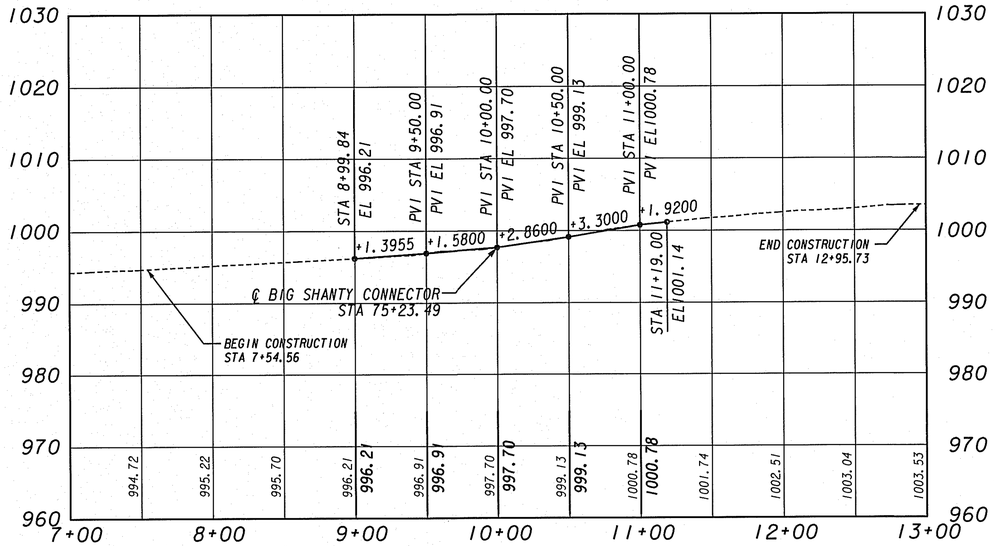

GEORGE BUSBEE PKWY PROFILE

CROY ENGINEERING Engineers Planners Surveyors

200 NORTH COBB PARKWAY, BLDG. 400, SUITE 413
MARIETTA, GA 30062
PHONE: (770) 971-5407 FAX: (770) 971-0620

SCALE:
1" = 10' VERT.
1" = 50' HORZ.

REVISION DATES		

STATE OF GEORGIA
DEPARTMENT OF TRANSPORTATION
OFFICE: DISTRICT 7

CROSSROAD PROFILE
BARRETT LAKES BLVD & GEORGE BUSBEE PKWY

BIG SHANTY CONNECTOR
PHASE 1

DRAWING No. 16-01

GPLN

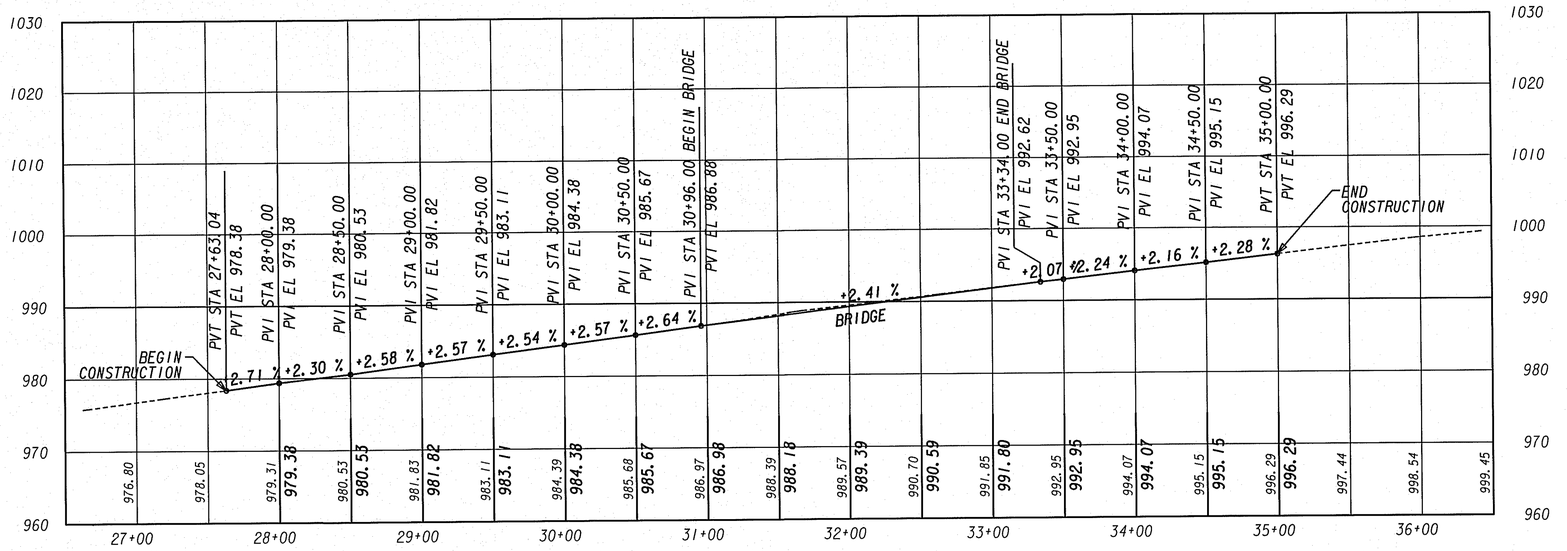

CROY ENGINEERING
Engineers Planners Surveyors
200 NORTH COBB PARKWAY, BLDG. 400, SUITE 413
MARIETTA, GA 30062
PHONE: (770) 971-5407 FAX: (770) 971-0620

SCALE:
1" = 10' VERT.
1" = 50' HORZ.

REVISION DATES

STATE OF GEORGIA
DEPARTMENT OF TRANSPORTATION
OFFICE:

CROSSROAD PROFILE I-75 SOUTHBOUND

BIG SHANTY CONNECTOR
PHASE 1

DRAWING No. 16-02

3/1/2007 GRIEDG

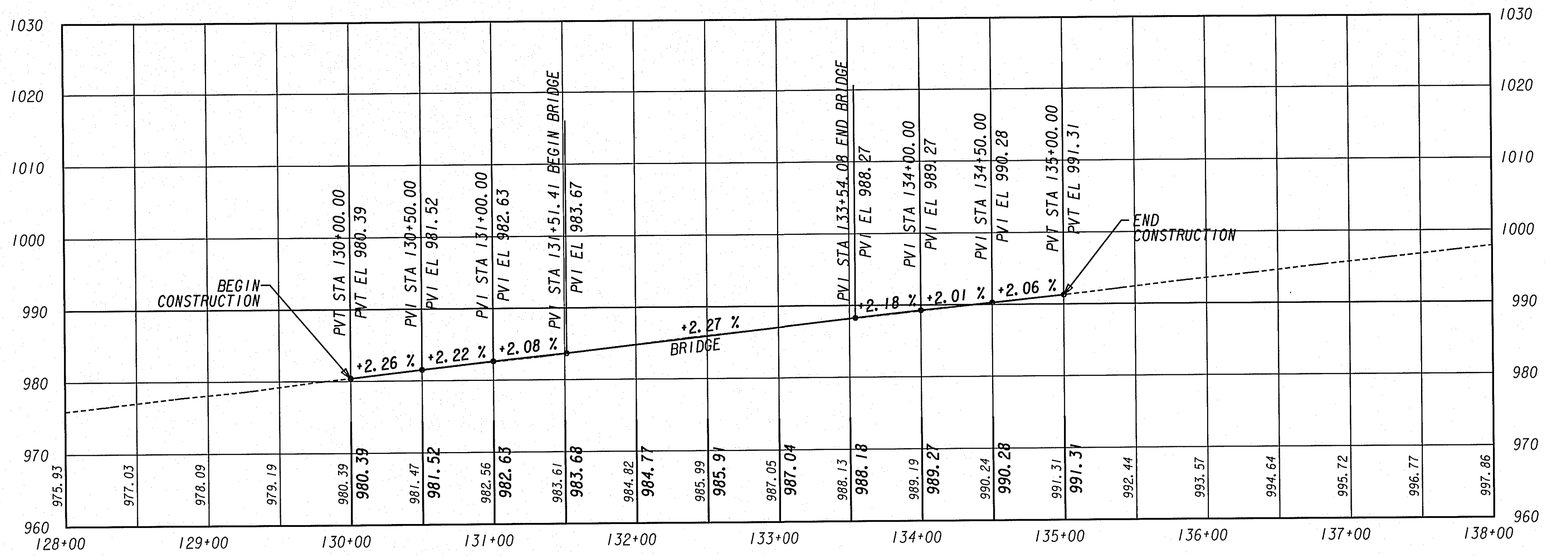

CROY ENGINEERING
Engineers Planners Surveyors
200 NORTH COBB PARKWAY, BLDG. 400, SUITE 413
MARIETTA, GA 30062
PHONE: (770) 971-5407 FAX: (770) 971-0620

SCALE:
1" = 10' VERT.
1" = 50' HORZ.

REVISION DATES

STATE OF GEORGIA
DEPARTMENT OF TRANSPORTATION
OFFICE:

CROSSROAD PROFILE
I-75 NORTHBOUND

BIG SHANTY CONNECTOR
PHASE 1

DRAWING No. 16-03

3/1/2007 GRIEDG

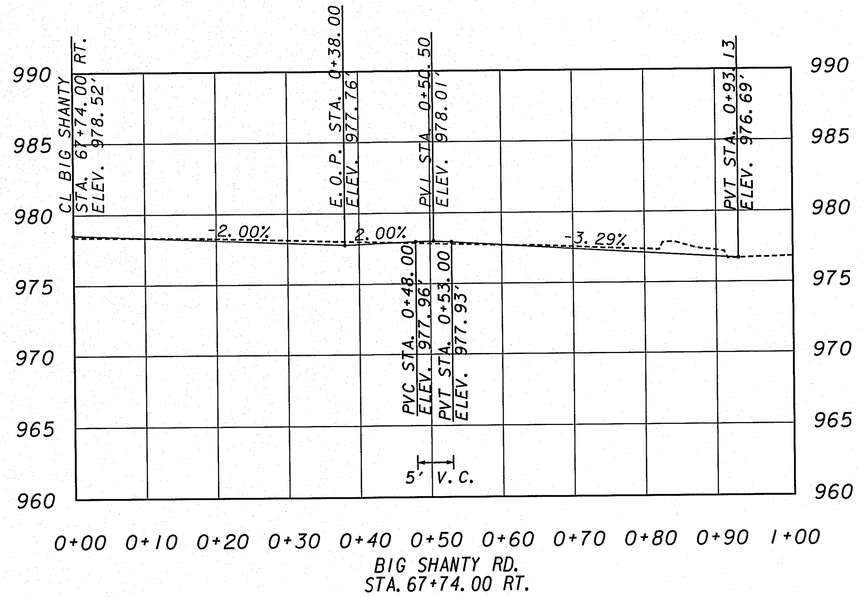

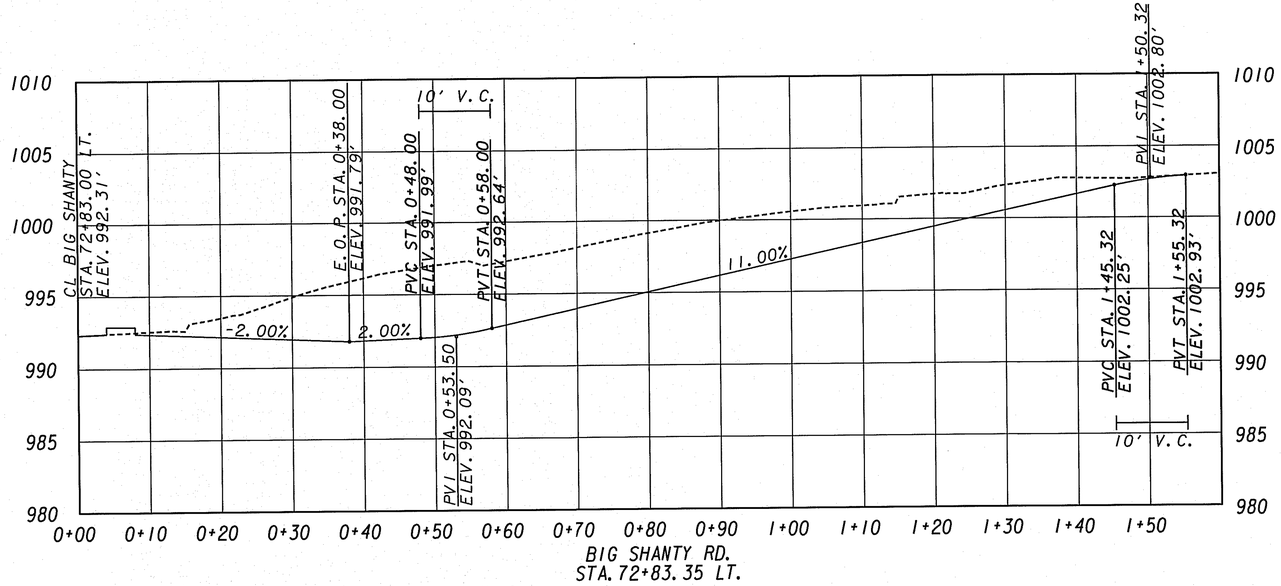

CROY ENGINEERING
Engineers Planners Surveyors
200 NORTH COBB PARKWAY, BLDG. 400, SUITE 413
MARIETTA, GA 30062
PHONE: (770) 971-5407 FAX: (770) 971-0620

SCALE:
1" = 5' VERT.
1" = 10' HORZ.

REVISION DATES

STATE OF GEORGIA
DEPARTMENT OF TRANSPORTATION
OFFICE: DISTRICT 7

DRIVEWAY PROFILE

BIG SHANTY CONNECTOR
PHASE 1

DRAWING No. 17-01

GPLN

10/15/2009	10:34:31 AM	PRF	y:\0313 big shanty conn\design\006869 phase 1\dgn\006869gr01.dgn
USER:dwebb		$$PENTABLE$$	

STATE	PROJECT NUMBER	SHEET NO.	TOTAL SHEETS
GA	CSSTP-0006-00(869)	44	370

CONSTRUCTION
T LAKES BLVD.
STA 5+41.00

DCB TOP=952.42
INV. IN=947.42(N)
INV. IN=946.60(NE)
INV. OUT=946.59(S)

EXIST. R/W

BEGIN MILLING & OVERLAY
STA 5+69.21

MATCH EXIST.
C&G AND S/W

69.21
24.40 RT.
(BARRETT LAKES)

69.21
36.94 RT.
(BARRETT LAKES)

CONSTR. ℄ BARRETT LAKES BLVD.

DCB TOP=953.84
INV. IN=949.33(E)
INV. IN=949.41(N)
INV. OUT=949.29(S)

END C&G MATCH EXIST.
STA 8+55.47
28.29' L
BARRETT LAKES.

FILL AND
ABANDON

2' GRASS
STRIP (TYP)

FULL-DEPTH PAVING
(SEE CROSS SECTIONS)

REMOVE EXIST.
CURB & GUTTER

DCB TOP=954.34
INV. OUT=948.93

E-1

E-2

INV. IN=948.30

REQ'D R/W

6+00.00
63.91' RT.
(BARRETT LAKES)
KC1176

948

24"STM

24"STM

24"STM

St-Rp

954.50

TRACT 2

2
ROBERT McCAMY
SEE SHT. #9

7+46.00
137.00' RT.
(BARRETT LAKES)
KC1173

SEDIMENT BASIN BOTTOM
388 SF @ ELEV. 948.50

BOTTOM OF BAF173C261

TOP OF BANK-F174257

TOP OF BANK-F174258

TOP OF BANK-F174259

BOTTOM OF BAF173C257

BOTTOM OF BAF173C258

BOTTOM OF BAF173C259

BOTTOM OF BAF173C260

REQ'D R/W

EXIST. R/W

BEGIN MILLING & OVERLAY
STA 10.62

MATCH EXIST.
C&G AND S/W

DCB TOP=955.33
INV. OUT=951.58

MILL & OVERLAY
STA 10.62

24.77
45.00' RT.

ADJUST TO GRADE
REMOVE

LAKES)

INST. ALL-
CURB CUT RAMP
GDOT TYPE A (TYP)

SIDEWALKS IN RAIN
TO BE 6" THICK (TYP)

INST. TOP=956.55
INV. IN=952.05(W)
INV. IN=952.13(E)
INV. OUT=951.92(S)

98.22
27.97' L
9+00

FILL AND
ABANDON

REMOVE
EXIST.
CURB &
GUTTER

FILL AND
ABANDON
25.74
83.52' RT.

℄ BARRETT LAKES BLVD.
N 14°36'24" W
457.02'

94.48'

C&G AND S/W
28.29' RT.

BOTTOM OF BAF173C262

EXIST. R/W

REQ'D R/W

DCB TOP=956.38
INV. OUT=952.63

16" STM

St-Rp

END MILL & OVERLAY
BEGIN FULL DEPTH
PAVING
STA 38+72

RC 52+95.14
2.0%

515.00

R 4'

97.50
46.00' LT.

92.50
34.00' RT.

98.50
100.0' RT.

98.50
200' RT.

5' SIDEWALK

INST. ALL-
CURB CUT RAMP
GDOT TYPE A (TYP)

24'

BIG SHANTY CONNECTOR

STAMPED COLORED CONCRETE (TYP)

2' GRASS
STRIP (TYP)

2' GRASS
STRIP (TYP)

54+00

24.00'

18.00'

8.00'

18"

N 70°54'32"

0.97 AC.
C = 0.61
TO A6

BLA 52+93.15
75.00' RT.

BLA 52+98.50
75.00' LT.

REQ'D R/W & L/A

REQ'D R/W & L/A

53+82.00
102.00' RT.
KC1172

TRACT 2

53+79.00
145.00' RT.
KC1168

2
ROBERT McCAMY
SEE SHT. #9

54+74.94
113.00' RT.
KC1171

GPLN

CROY ENGINEERING
Engineers Planners Surveyors
200 NORTH COBB PARKWAY, BLDG. 400, SUITE 413
MARIETTA, GA 30062
PHONE: (770) 971-5407 FAX: (770) 971-0620

SCALE IN FEET
0 20 40 80

REVISION DATES		

STATE OF GEORGIA
DEPARTMENT OF TRANSPORTATION
OFFICE: DISTRICT 7

SPECIAL GRADING SEDIMENT BASIN 1

BIG SHANTY CONNECTOR
PHASE 1

DRAWING No. 18-01

STATE	PROJECT NUMBER	SHEET NO.	TOTAL SHEETS
GA	CSSTP-0006-00(869)	45	370

CROY ENGINEERING Engineers Planners Surveyors
200 NORTH COBB PARKWAY, BLDG. 400, SUITE 413
MARIETTA, GA 30062
PHONE: (770) 971-5407 FAX: (770) 971-0620

SCALE IN FEET
0 20 40 80

REVISION DATES

STATE OF GEORGIA
DEPARTMENT OF TRANSPORTATION
OFFICE: DISTRICT 7

SPECIAL GRADING
SEDIMENT BASIN II

BIG SHANTY CONNECTOR
PHASE I

DRAWING No. 18-02

GPLN

10/15/2009
USER:dwebb

10:34:34 AM PRF
$$PENTABLE$$

y:\0313 big shanty conn\design\006869 phase 1\dgn\006869gr03.dgn

STATE	PROJECT NUMBER	SHEET NO.	TOTAL SHEETS
GA	CSSTP-0006-00(869)	46	370

EX. DETENTION BASIN OUTLET STRUCTURE
NTS

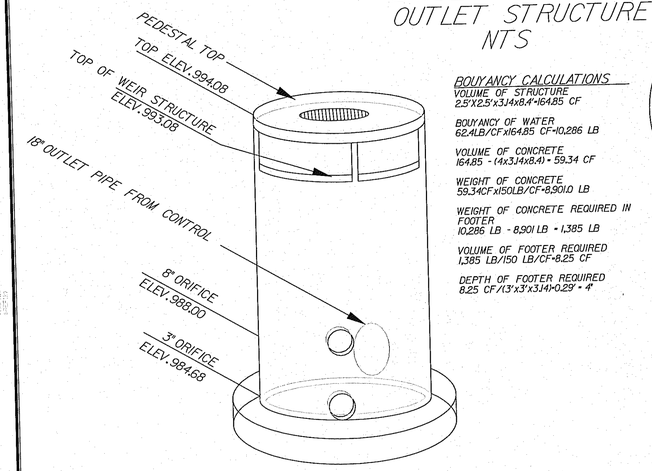

BOUYANCY CALCULATIONS

VOLUME OF STRUCTURE
2.5'X2.5'x3.14x8.4'=164.85 CF

BOUYANCY OF WATER
62.4LB/CFx164.85 CF=10,286 LB

VOLUME OF CONCRETE
164.85 - (4x3.14x8.4) = 59.34 CF

WEIGHT OF CONCRETE
59.34CFx150LB/CF=8,901.0 LB

WEIGHT OF CONCRETE REQUIRED IN FOOTER
10,286 LB - 8,901 LB = 1,385 LB

VOLUME OF FOOTER REQUIRED
1,385 LB/150 LB/CF=8.25 CF

DEPTH OF FOOTER REQUIRED
8.25 CF/(3'x3'x3.14)=0.29' = 4"

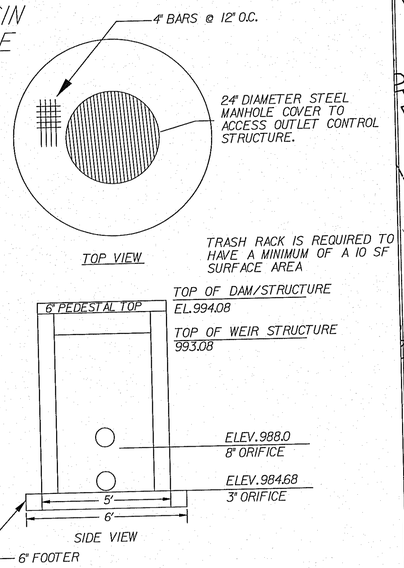

TOP OF BASIN=994.08; BOTTOM OF BASIN=984.68

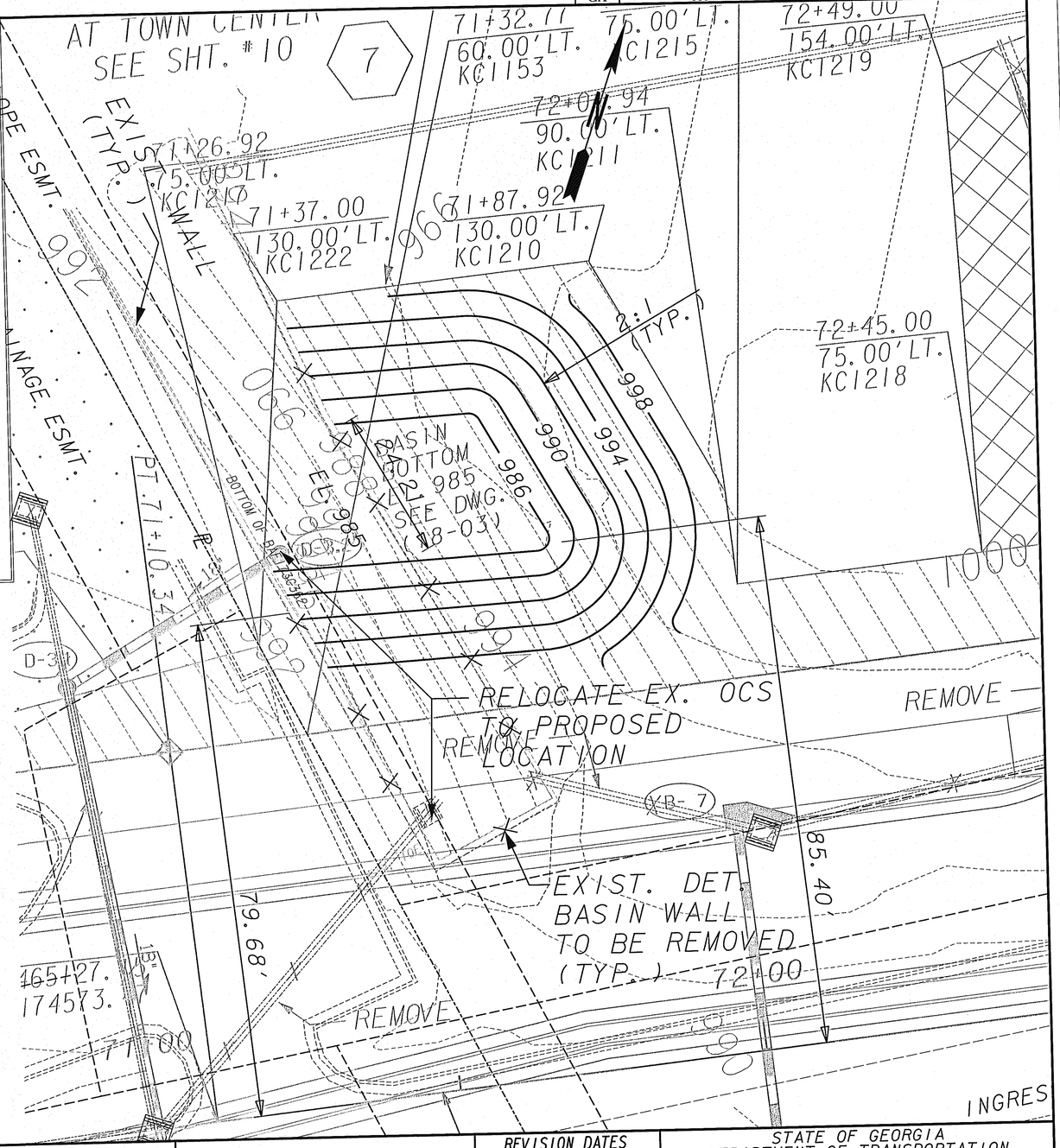

CROY ENGINEERING
Engineers
Planners
Surveyors
200 NORTH COBB PARKWAY, BLDG. 400, SUITE 413
MARIETTA, GA 30062
PHONE: (770) 971-5407 FAX: (770) 971-0620

SCALE IN FEET
0 10 20 40

REVISION DATES		

STATE OF GEORGIA
DEPARTMENT OF TRANSPORTATION
OFFICE: DISTRICT 7

SPECIAL GRADING DETENTION POND MODIFICATION

BIG SHANTY CONNECTOR
PHASE 1

DRAWING No. 18-03

GPLN

10/15/2009 10:34:39 AM PRF
USER:dwebb $$PENTABLE$$
y:\0313 big shanty conn\design\006869 phase 1\dgn\006869gr04.dgn

STATE	PROJECT NUMBER	SHEET NO.	TOTAL SHEETS
GA	CSSTP-0006-00(869)	47	370

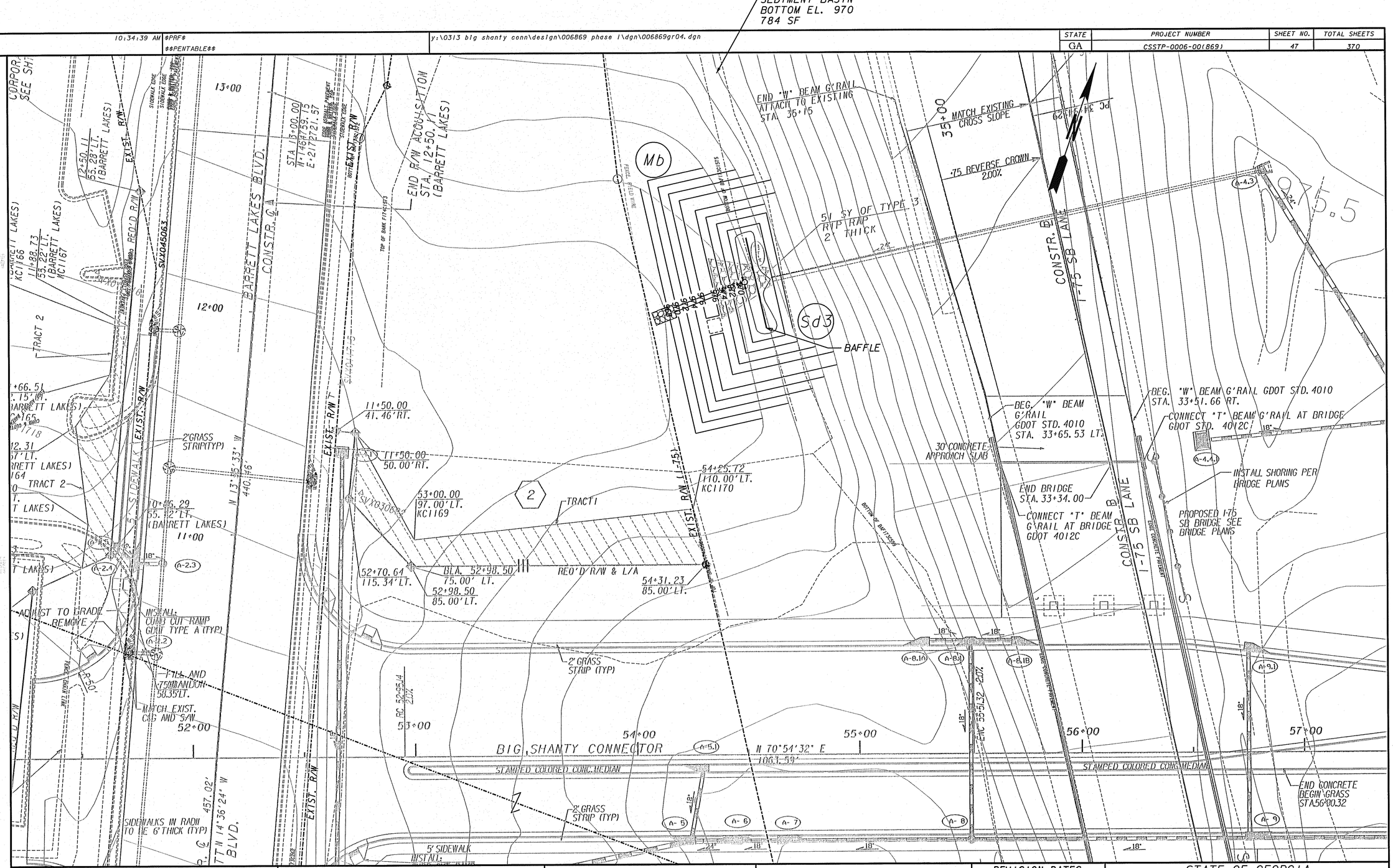

CROY ENGINEERING Engineers Planners Surveyors

200 NORTH COBB PARKWAY, BLDG. 400, SUITE 413
MARIETTA, GA 30062
PHONE: (770) 971-5407 FAX: (770) 971-0620

SCALE IN FEET
0 20 40 80

REVISION DATES

STATE OF GEORGIA
DEPARTMENT OF TRANSPORTATION
OFFICE: DISTRICT 7

SPECIAL GRADING
SEDIMENT BASIN 3

BIG SHANTY CONNECTOR
PHASE 1

DRAWING No. 18-04

10/15/2009	10:34:41 AM	PRF	y:\03|3 big shanty conn\design\006869 phase 1\dgn\006869gr05.dgn	STATE	PROJECT NUMBER	SHEET NO.	TOTAL SHEETS
USER:dwebb		$$PENTABLE$$		GA	CSSTP-0006-00(869)	48	370

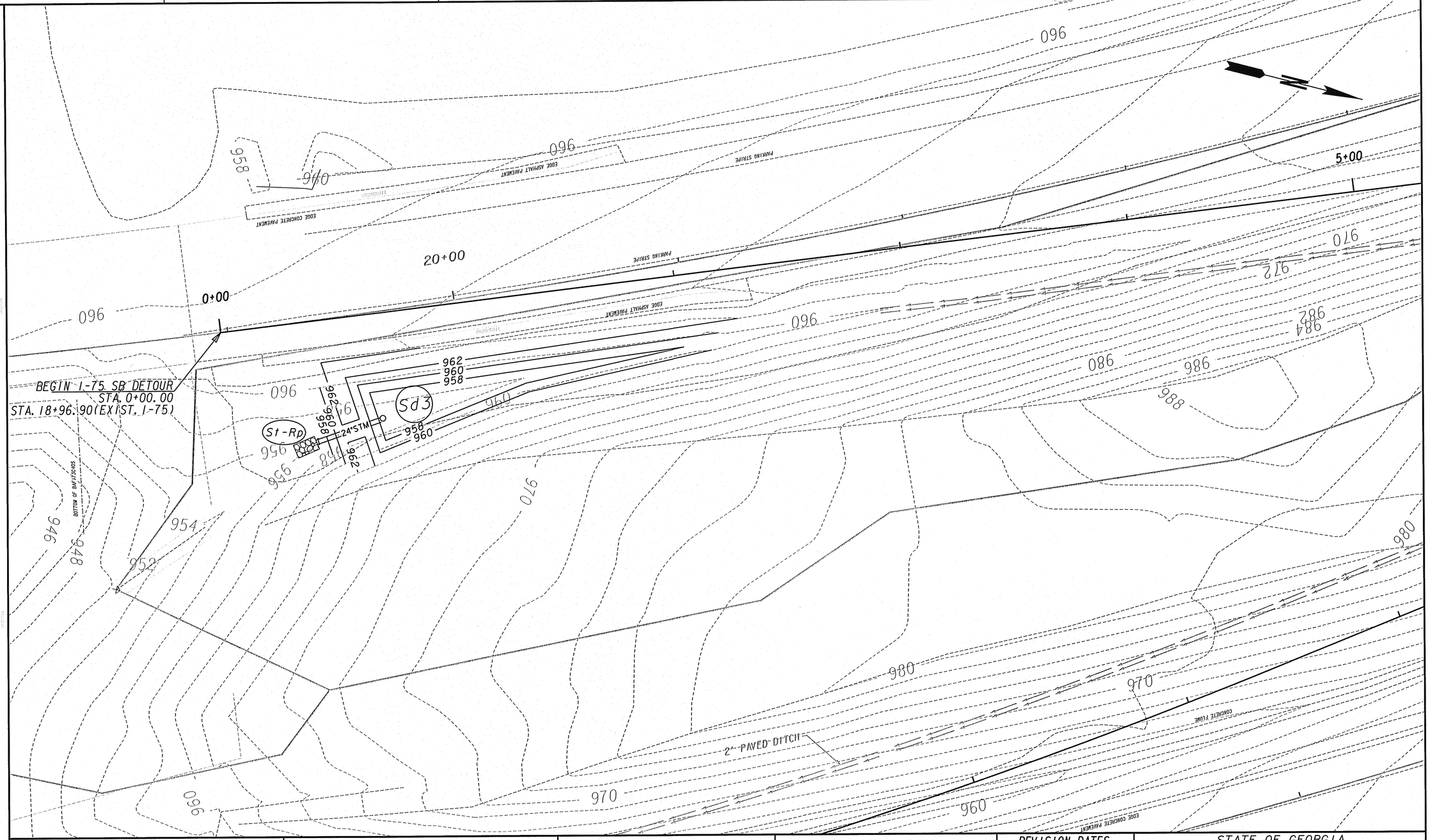

CROY ENGINEERING Engineers Planners Surveyors

200 NORTH COBB PARKWAY, BLDG. 400, SUITE 413
MARIETTA, GA 30062
PHONE: (770) 971-5407 FAX: (770) 971-0620

SCALE IN FEET
0 20 40 80

REVISION DATES		

STATE OF GEORGIA
DEPARTMENT OF TRANSPORTATION
OFFICE: DISTRICT 7

SPECIAL GRADING SEDIMENT BASIN 4

BIG SHANTY CONNECTOR
PHASE I

DRAWING No. 18-05

GPLN

STAGE 1

SEQUENCE OF CONSTRUCTION

1. CONSTRUCT SEDIMENT BASINS #3 AND 4. REMOVE I-75 SB CONCRETE SHOULDERS FROM STA 2+00 TO STA 6+50 AND I-75 NB CONCRETE SHOULDERS FROM STA 126+32.55TO STA 132+45.50. MATCH TRAVEL WAY CROSS SLOPE WITH THE FINAL LAYER OF ASPHALT FOR THE DETOUR
2. GRADE AND CONSTRUCT I-75 DETOUR, INCLUDING DRAINAGE OMITTING THE FINAL LAYER OF ASPHALT.
3. INSTALL FINAL LAYER OF ASPHALT FOR I-75 DETOUR.
4. REMOVE MEDIAN ISLANDS FROM APPROXIMATELY STATION 70+40 TO 74+75 ON BIG SHANTY CONNECTOR AND PAVE WITH TEMPORARY PAVING.

STAGING NOTES

1. ACCESS POINT FOR ALL BUSINESSES WITHIN THE CONSTRUCTION AREA MUST BE ALLOWED AT ALL TIMES UNLESS ALTERNATE ACCESS IS PROVIDED.
2. WORK ZONE HAZARD PROTECTION AND CLEAR ZONE REQUIREMENTS SHALL ADHERE TO GDOT STANDARDS FOR TRAFFIC CONTROL AND THE AASHTO ROADSIDE DESIGN GUIDE, MOST CURRENT VERSION.
3. A MINIMUM WORK ZONE SPEED OF 55 MPH ON I-75 MUST BE MAINTAINED DURING CONSTRUCTION.
4. VEHICLE TRAFFIC MAY BE SHIFTED LATERALLY TO ALLOW FOR CONTINUOUS MOVEMENT AND WORK ZONE CLEARANCES. THE MINIMUM TRAVEL LANE WIDTH SHALL BE ELEVEN (11) FEET.
5. SEE MAINLINE PLAN FOR CONSTRUCTION STATION AND OFFSETS.
6. SEE EARTHWORK CROSS SECTIONS IN STAGE 2 FOR EARTHWORK GRADING.
7. SEE EROSION AND SEDIMENT CONTROL PLANS FOR BMP LOCATIONS.
8. CONTRACTOR TO ENSURE POSITIVE DRAINAGE DURING ALL STAGES OF CONSTRUCTION.
9. CONTRACTOR SHALL ADHERE TO SPECIAL PROVISION 150 FOR TRAFFIC SHIFT FROM EXISTING TO TEMPORARY.

CURVE # 3
PI STA.= 18+96.64
N = 1463481.6300
E = 2173890.9100
DELTA = 20°20'24.6"CCW
R = 3718.00'
e = 4.0%
T = 666.97'
L = 1319.90'
E = 59.35'

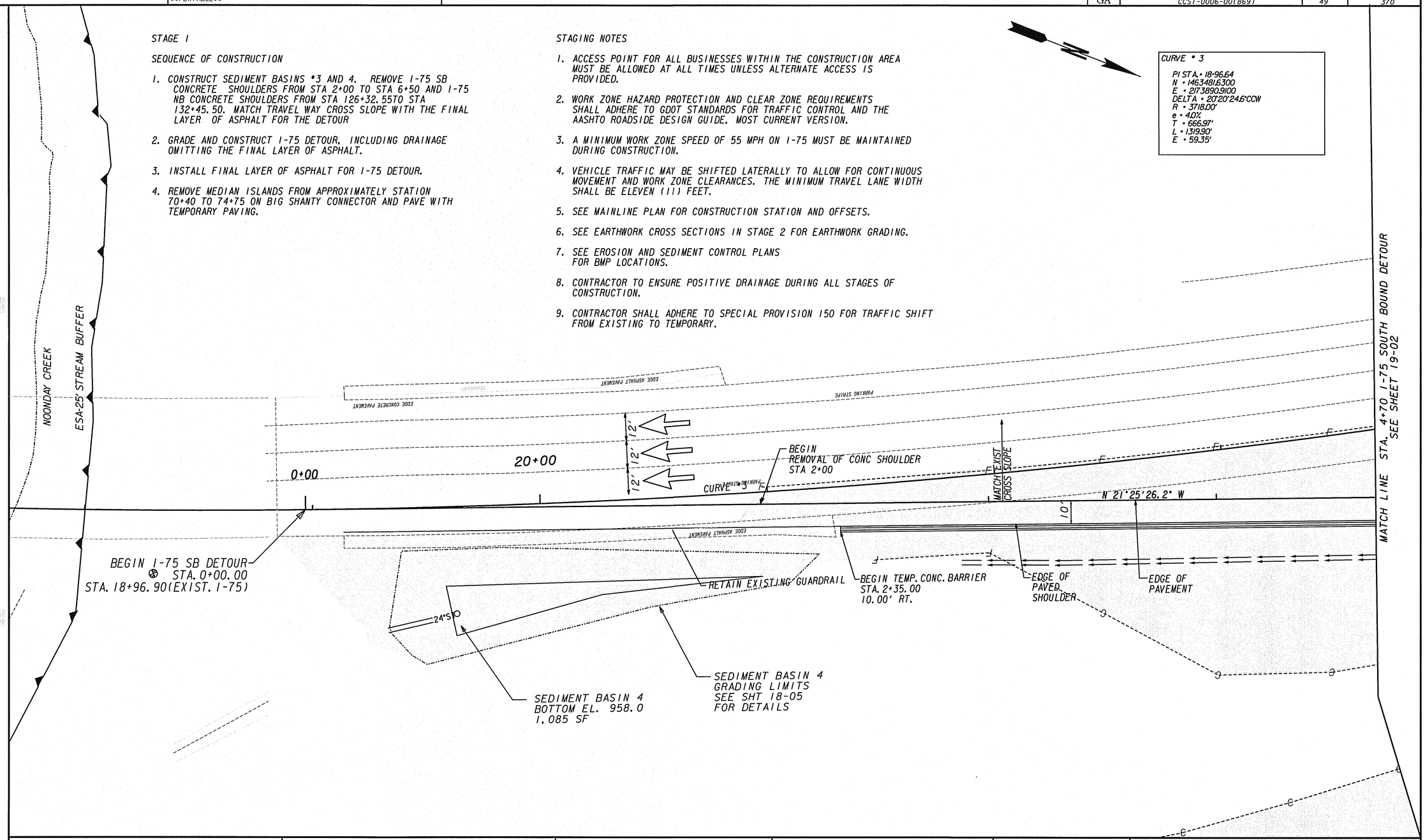

STANDARD LEGEND

STAGE 1 CONSTRUCTION

TRAFFIC FLOW INDICATORS

CROY ENGINEERING
Engineers Planners Surveyors
200 NORTH COBB PARKWAY, BLDG. 400, SUITE 413
MARIETTA, GA 30062
PHONE: (770) 971-5407 FAX: (770) 971-0620

SCALE IN FEET
0 20 40 80

REVISION DATES		
10/14/09		

STATE OF GEORGIA
DEPARTMENT OF TRANSPORTATION
OFFICE: DISTRICT 7

CONSTRUCTION STAGING STAGE 1 PLAN

BIG SHANTY CONNECTOR
PHASE 1

DRAWING No. 19-01

GPLN

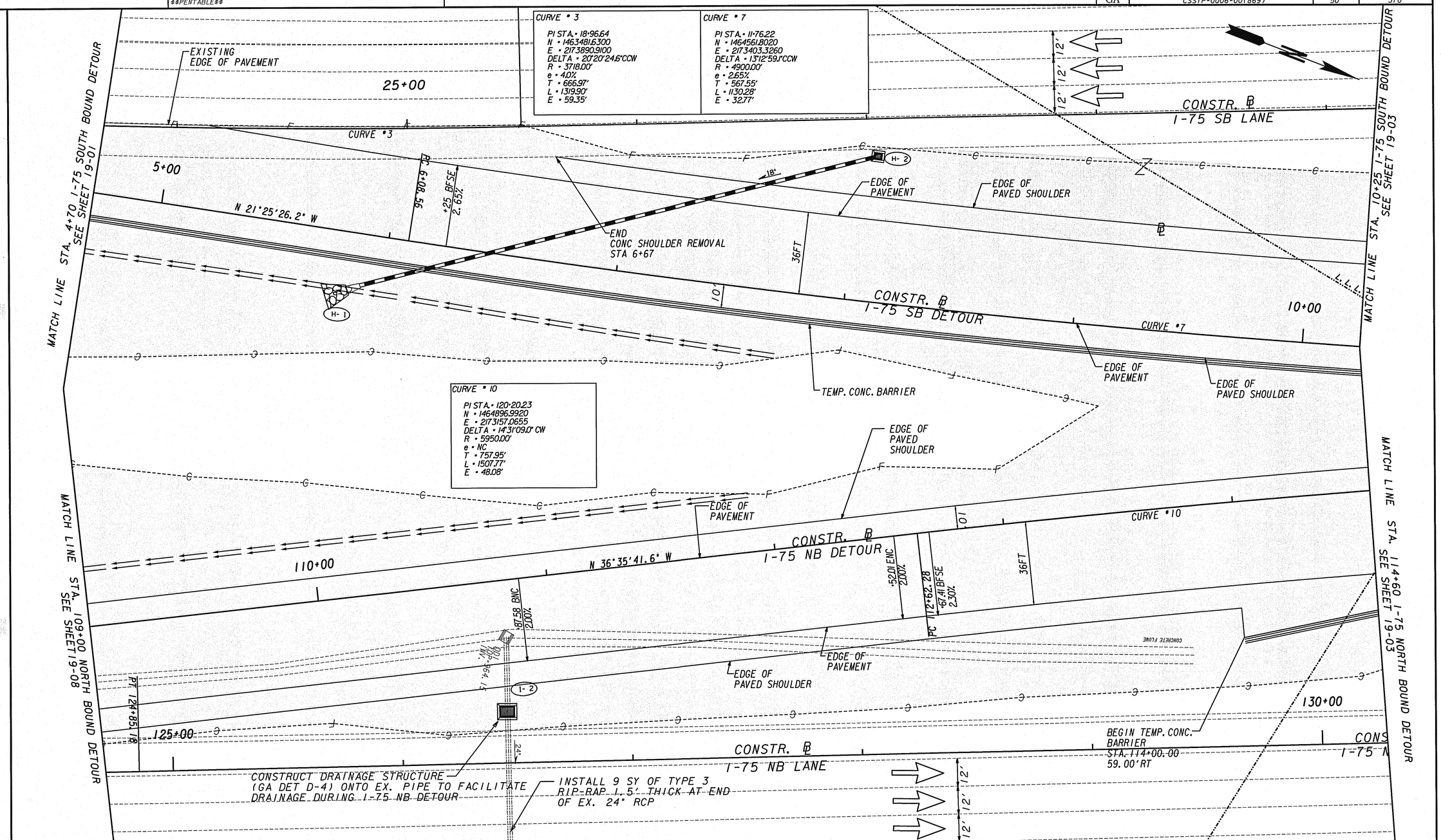

STANDARD LEGEND

STAGE I CONSTRUCTION

TRAFFIC FLOW INDICATORS

CROY ENGINEERING
Engineers Planners Surveyors
200 NORTH COBB PARKWAY, BLDG. 400, SUITE 413
MARIETTA, GA 30062
PHONE: (770) 971-5407 FAX: (770) 971-0620

SCALE IN FEET
0 20 40 80

REVISION DATES

STATE OF GEORGIA
DEPARTMENT OF TRANSPORTATION
OFFICE: DISTRICT 7

CONSTRUCTION STAGING STAGE I PLAN

BIG SHANTY CONNECTOR
PHASE I

DRAWING No. 19-02

10/15/2009 10:34:48 AM PRF y:\0313 big shanty conn\design\006869 phase 1\dgn\006869st03.dgn
USER:dwebb $$PENTABLE$$

STATE	PROJECT NUMBER	SHEET NO.	TOTAL SHEETS
GA	CSSTP-0006-00(869)	51	370

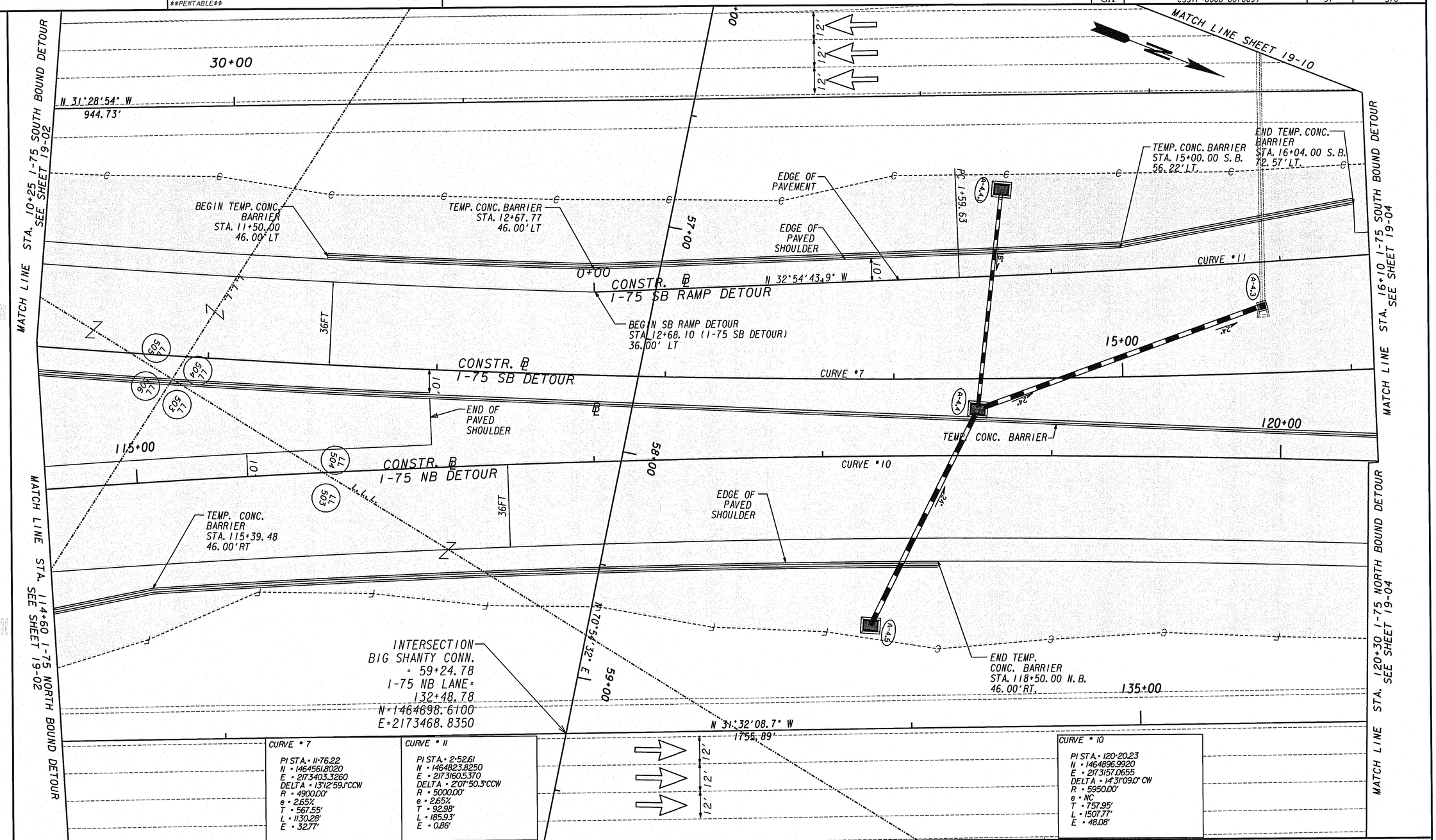

CURVE # 7
PI STA. = 11+76.22
N = 1464561.8020
E = 2173403.3260
DELTA = 13°12'59.1" CCW
R = 4900.00'
e = 2.65%
T = 567.55'
L = 1130.28'
E = 32.77'

CURVE # 11
PI STA. = 2+52.61
N = 1464823.8250
E = 2173160.5370
DELTA = 2°07'50.3" CCW
R = 5000.00'
e = 2.65%
T = 92.98'
L = 185.93'
E = 0.86'

CURVE # 10
PI STA. = 120+20.23
N = 1464896.9920
E = 2173157.0655
DELTA = 14°31'09.0" CW
R = 5950.00'
e = NC
T = 757.95'
L = 1507.77'
E = 48.08'

STANDARD LEGEND

STAGE I CONSTRUCTION

TRAFFIC FLOW INDICATORS

CROY ENGINEERING
Engineers Planners Surveyors
200 NORTH COBB PARKWAY, BLDG. 400, SUITE 413
MARIETTA, GA 30062
PHONE: (770) 971-5407 FAX: (770) 971-0620

SCALE IN FEET
0 20 40 80

REVISION DATES

STATE OF GEORGIA
DEPARTMENT OF TRANSPORTATION
OFFICE: DISTRICT 7

CONSTRUCTION STAGING STAGE I PLAN

BIG SHANTY CONNECTOR
PHASE I

DRAWING No. 19-03

10/15/2009	10:34:50 AM	PRF	y:\0313 big shanty conn\design\006869 phase 1\dgn\006869st04.dgn	STATE	PROJECT NUMBER	SHEET NO.	TOTAL SHEETS
USER:dwebb		$$PENTABLE$$		GA	CSSTP-0006-00(869)	52	370

CURVE #4	CURVE #7	CURVE #8
PI STA.= 41+43.82	PI STA.= 11+76.22	PI STA.= 24+84.01
N = 1465410.0140	N = 1464561.8020	N = 1465642.7317
E = 2172710.0460	E = 2173403.3260	E = 2172656.5175
DELTA = 18°31'42.0"CW	DELTA = 13°12'59.9"CCW	DELTA = 21°41'13.7" CW
R = 3982.00'	R = 4900.00'	R = 2810.00'
e = 4.0%	e = 2.65%	e = 4.00%
T = 649.52'	T = 567.55'	T = 538.25'
L = 1287.70'	L = 1130.28'	L = 1063.62'
E = 52.63'	E = 32.77'	E = 51.09'

35+00
EXIST. E.P.
12' 12' 12'
CURVE #4
MATCH LINE SHEET 19-10
40+00
MATCH LINE STA. 16+10 I-75 SOUTH BOUND DETOUR SEE SHEET 19-03
MATCH LINE STA. 21+70 I-75 SOUTH BOUND DETOUR SEE SHEET 19-05
PT 3+45.96
END FULL DEPTH CONSTRUCTION STA. 3+50.00
EDGE OF PAVEMENT
LIMITS OF CONSTRUCTION I-75 SB STA 149+92 SEE SHT 19-06
EDGE OF PAVED SHOULDER
EDGE OF SHOULDER
EDGE OF PAVEMENT
REMOVE EXISTING GUARDRAIL
5+00
CONSTR. ℄ I-75 SB RAMP DETOUR
N 35°34.1' W
2.65%
PT 17+38.84
20+00
+34.27 BFSE
4.00%
VARIES
PC 8+10.07
EDGE OF PAVEMENT
EDGE OF SHOULDER
CURVE #8
G'RAIL ANCHOR TP. I GDOT STD. 4012D
CURVE #7
CONSTR. ℄ I-75 SB DETOUR
N 34°38'25.9" W
PC 19+46.76
CONSTR. ℄ I-75 NB DETOUR
BEGIN GUARDRAIL STA. 16+64.90, 12.00' RT. GDOT STD. 4010
TEMP CONC. BARRIER
EDGE OF PAVED SHOULDER
EDGE OF PAVEMENT
EDGE OF PAVED SHOULDER
125+00
CURVE #10
EDGE OF PAVED SHOULDER
36FT
10'
LIMITS OF CONSTRUCTION I-75 NB STA 147+99.50 SEE SHT 19-06
EDGE OF PAVEMENT
EDGE OF PAVEMENT
140+00
EDGE OF PAVED SHOULDER
N 31°32'08.7" W
EXIST. EDGE OF PAVEMENT
12'
12'
12'

CURVE #10
PI STA.= 120+20.23
N = 1464896.9920
E = 2173157.0655
DELTA = 14°31'09.0" CW
R = 5950.00'
e = NC
T = 757.95'
L = 1507.77'
E = 48.08'

STANDARD LEGEND

STAGE 1 CONSTRUCTION

TRAFFIC FLOW INDICATORS

CROY ENGINEERING
Engineers Planners Surveyors
200 NORTH COBB PARKWAY, BLDG. 400, SUITE 413
MARIETTA, GA 30062
PHONE: (770) 971-5407 FAX: (770) 971-0620

SCALE IN FEET
0 20 40 80

REVISION DATES

STATE OF GEORGIA
DEPARTMENT OF TRANSPORTATION
OFFICE: DISTRICT 7

CONSTRUCTION STAGING STAGE 1 PLAN

BIG SHANTY CONNECTOR
PHASE 1

DRAWING No. 19-04

GPLN

10/15/2009 10:34:52 AM	PRF	y:\0313 big shanty conn\design\006869 phase 1\dgn\006869st05.dgn	STATE	PROJECT NUMBER	SHEET NO.	TOTAL SHEETS
USER:dwebb	$$PENTABLE$$		GA	CSSTP-0006-00(869)	53	370

CURVE • 4	CURVE • 8	CURVE • 12
PI STA.= 41+43.82	PI STA.= 24+84.01	PI STA.= 11+81.82
N = 1465410.0140	N = 1465642.7317	N = 1465584.6070
E = 2172710.0460	E = 2172656.5175	E = 2172626.9840
DELTA = 18°31'42.0"CW	DELTA = 21°41'13.7" CW	DELTA = 17°19'07.7"CW
R = 3982.00'	R = 2810.00'	R = 2500.00'
e = 4.0%	e = 4.00%	e = MATCH EXIST.
T = 649.52'	T = 538.25'	T = 380.74'
L = 1287.70'	L = 1063.62'	L = 755.68'
E = 52.63'	E = 51.09'	E = 28.83'

MATCH LINE STA. 21+70 I-75 SOUTH BOUND DETOUR
SEE SHEET 19-04

MATCH LINE STA. 27+40 I-75 SOUTH BOUND DETOUR
SEE SHEET 19-06

CONSTR. ℄ I-75 SB RAMP DETOUR

CURVE • 12

10+00

12' 12' 12'

CURVE • 4

45+00

+63.31 EFSE 4.00%

25+00

CONSTR. ℄ I-75 SB DETOUR

CURVE • 8

10'

EDGE OF PAVEMENT

EDGE OF PAVED SHOULDER

BEGIN GUARDRAIL STA. 25+49.78 12.00' LT. GDOT STD. 4010

G-RAIL ANCHOR TP. 12 GDOT STD. 4040

EDGE OF PAVEMENT

G-2

24"

G-3

DO NOT DISTURB OVERHEAD SIGN

END TEMP. CONC. BARRIER STA. 129+50.00 10.00' LT.

TEMP. CONC. BARRIER

EDGE OF PAVEMENT

EDGE OF PAVED SHOULDER

MATCH LINE STA. 125+90 I-75 NORTH BOUND DETOUR
SEE SHEET 19-04

MATCH LINE STA. 131+50 I-75 NORTH BOUND DETOUR
SEE SHEET 19-06

CURVE • 10 CONSTR. ℄ I-75 NB DETOUR

N 22°04'32.9" W 145+00

130+00

10'

36FT

00 EFSE 2.30%

REMOVE EXISTING GUARDRAIL

BEGIN CONC SHOULDER REMOVAL STA 126+32.55

10+00

CURVE • 6

12' 12' 12'

CONSTR. ℄ I-75 NB RAMP DETOUR

N 17°49'49.0" W 614.36'

BEGIN NB RAMP DETOUR STA 127+19.48 36.00' RT

EXIST. EDGE OF PAVEMENT

PT 127+70.05

CURVE • 6	CURVE • 10
PI STA.= 148+64.69	PI STA.= 120+20.23
N = 1466075.8749	N = 1464896.9920
E = 2172623.6634	E = 2173157.0655
DELTA = 18°32'42.4"CW	DELTA = 14°31'09.0" CW
R = 3819.73'	R = 5950.00'
e = 4.0%	e = NC
T = 623.63'	T = 757.95'
L = 1236.34'	L = 1507.77'
E = 50.57'	E = 48.08'

STANDARD LEGEND

STAGE 1 CONSTRUCTION

TRAFFIC FLOW INDICATORS

CROY ENGINEERING
Engineers Planners Surveyors
200 NORTH COBB PARKWAY, BLDG. 400, SUITE 413
MARIETTA, GA 30062
PHONE: (770) 971-5407 FAX: (770) 971-0620

SCALE IN FEET
0 20 40 80

REVISION DATES		

STATE OF GEORGIA
DEPARTMENT OF TRANSPORTATION
OFFICE: DISTRICT 7

CONSTRUCTION STAGING STAGE 1 PLAN

BIG SHANTY CONNECTOR
PHASE 1

DRAWING No. 19-05

GPLN

10/15/2009 10:34:54 AM PRF	y:\0313 big shanty conn\design\006869 phase 1\dgn\006869st06.dgn	STATE	PROJECT NUMBER	SHEET NO.	TOTAL SHEETS
USER:dwebb $$PENTABLE$$		GA	CSSTP-0006-00(869)	54	370

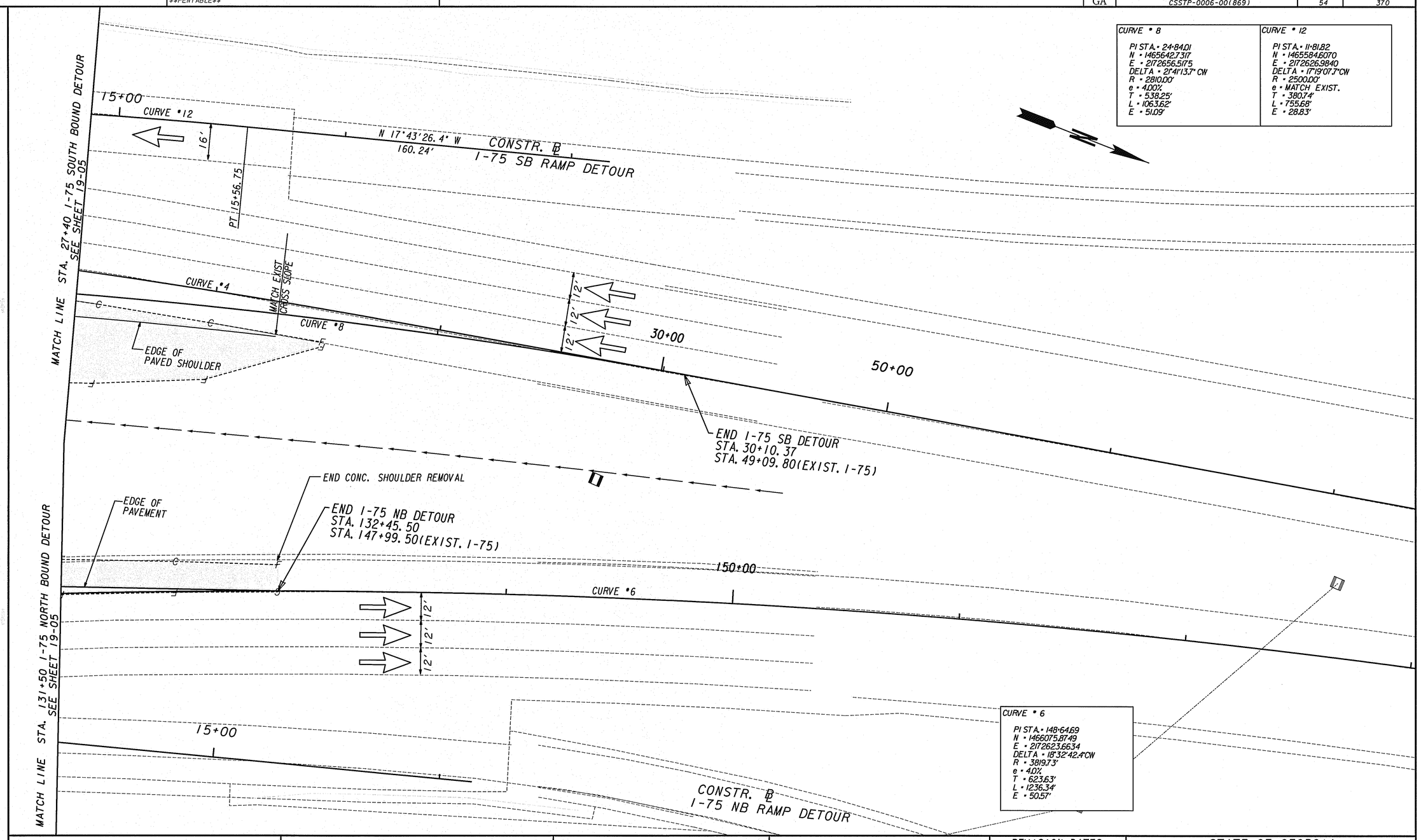

CURVE • 8	CURVE • 12
PI STA.• 24+84.01	PI STA.• 11+81.82
N • 1465642.7317	N • 1465584.6070
E • 2172656.5175	E • 2172626.9840
DELTA • 2°41'13.7" CW	DELTA • 17°19'07.7"CW
R • 2810.00'	R • 2500.00'
e • 4.00%	e • MATCH EXIST.
T • 538.25'	T • 380.74'
L • 1063.62'	L • 755.68'
E • 51.09'	E • 28.83'

CURVE • 6
PI STA.• 148+64.69
N • 1466075.8749
E • 2172623.6634
DELTA • 18°32'42.4"CW
R • 3819.73'
e • 4.0%
T • 623.63'
L • 1236.34'
E • 50.57'

STANDARD LEGEND

STAGE I CONSTRUCTION

TRAFFIC FLOW INDICATORS

CROY ENGINEERING
Engineers Planners Surveyors
200 NORTH COBB PARKWAY, BLDG. 400, SUITE 413
MARIETTA, GA 30062
PHONE: (770) 971-5407 FAX: (770) 971-0820

SCALE IN FEET
0 20 40 80

REVISION DATES		

STATE OF GEORGIA
DEPARTMENT OF TRANSPORTATION
OFFICE: DISTRICT 7

CONSTRUCTION STAGING STAGE I PLAN

BIG SHANTY CONNECTOR
PHASE I

DRAWING No. 19-06

GPLN

10/15/2009 10:34:56 AM	PRF	y:\0313 big shanty conn\design\006869 phase 1\dgn\006869st07.dgn	STATE	PROJECT NUMBER	SHEET NO.	TOTAL SHEETS
USER:dwebb	$$PENTABLE$$		GA	CSSTP-0006-00(869)	55	370

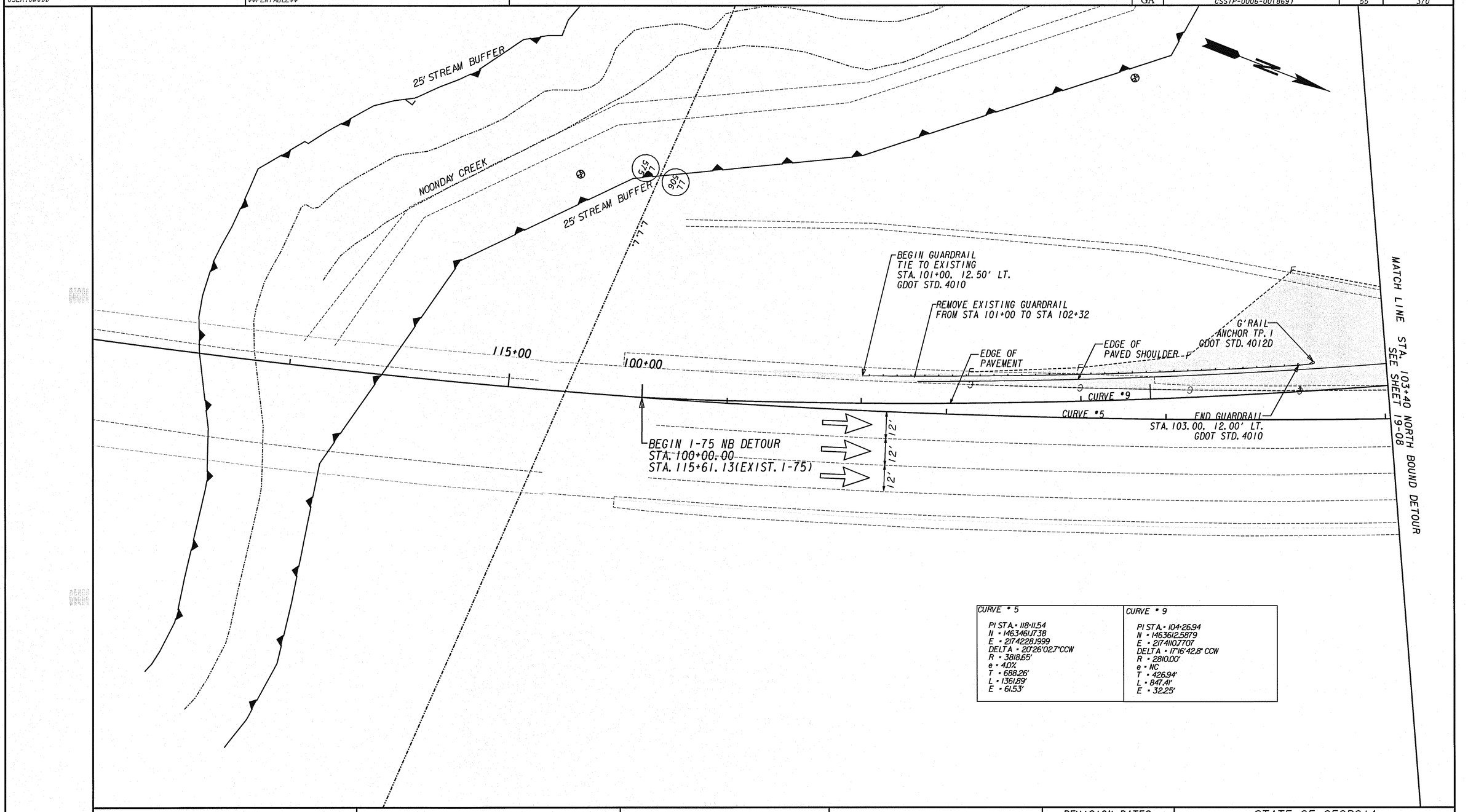

CURVE # 5	CURVE # 9
PI STA.= 118+11.54 N = 1463461.738 E = 2174228.1999 DELTA = 20°26'02.7"CCW R = 3818.65' e = 4.0% T = 688.26' L = 1361.89' E = 61.53'	PI STA.= 104+26.94 N = 1463612.5879 E = 2174110.7707 DELTA = 17°16'42.8" CCW R = 2810.00' e = NC T = 426.94' L = 847.41' E = 32.25'

STANDARD LEGEND

STAGE 1 CONSTRUCTION

TRAFFIC FLOW INDICATORS

CROY ENGINEERING Engineers Planners Surveyors

200 NORTH COBB PARKWAY, BLDG. 400, SUITE 413
MARIETTA, GA 30062
PHONE: (770) 971-5407 FAX: (770) 971-0620

SCALE IN FEET
0 20 40 80

REVISION DATES		

STATE OF GEORGIA
DEPARTMENT OF TRANSPORTATION
OFFICE: DISTRICT 7

CONSTRUCTION STAGING STAGE 1 PLAN

BIG SHANTY CONNECTOR
PHASE 1

DRAWING No. 19-07

GPLN

10/15/2009 10:34:58 AM PRF	y:\0313 big shanty conn\design\006869 phase 1\dgn\006869st08.dgn	STATE	PROJECT NUMBER	SHEET NO.	TOTAL SHEETS
USER:dwebb $$PENTABLE$$		GA	CSSTP-0006-00(869)	56	370

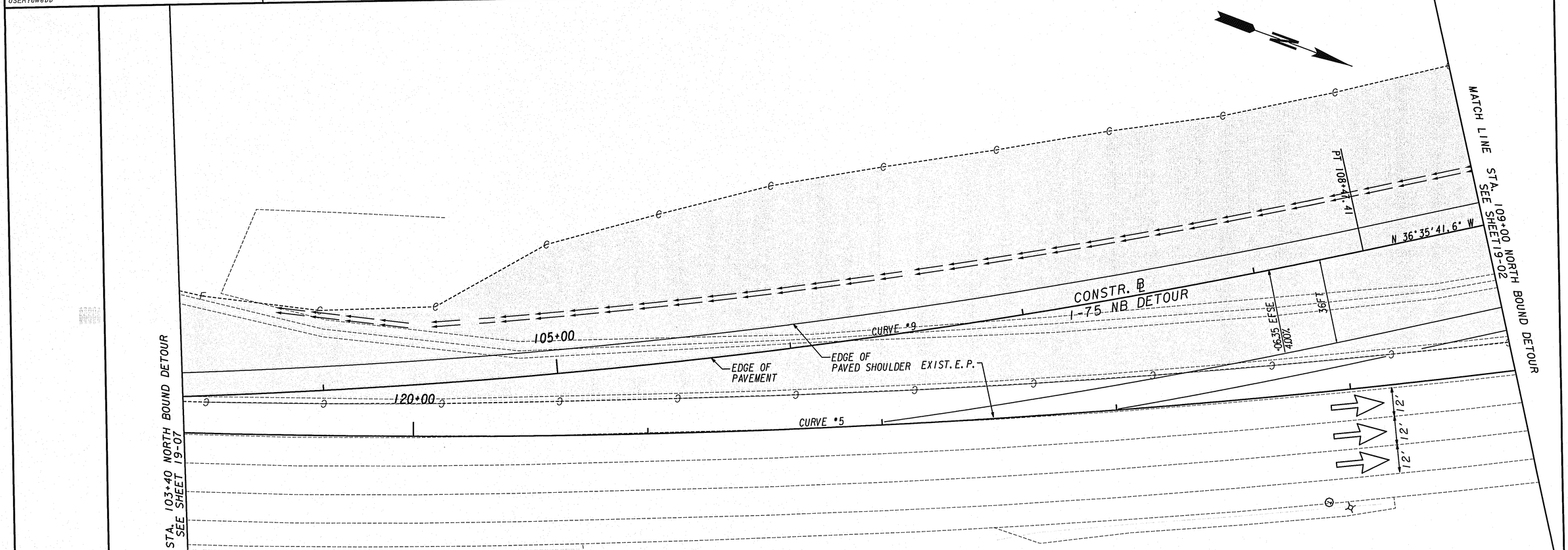

CURVE # 5	CURVE # 9
PI STA.= 118+11.54	PI STA.= 104+26.94
N = 1463461.738	N = 1463612.5879
E = 2174228.1999	E = 2174110.7707
DELTA = 20°26'02.7"CCW	DELTA = 17°16'42.8" CCW
R = 3818.65'	R = 2810.00'
e = 4.0%	e = NC
T = 688.26'	T = 426.94'
L = 1361.89'	L = 847.41'
E = 61.53'	E = 32.25'

STANDARD LEGEND

STAGE I CONSTRUCTION

TRAFFIC FLOW INDICATORS

CROY ENGINEERING
Engineers Planners Surveyors
200 NORTH COBB PARKWAY, BLDG. 400, SUITE 413
MARIETTA, GA 30062
PHONE: (770) 971-5407 FAX: (770) 971-0620

SCALE IN FEET
0 20 40 80

REVISION DATES

STATE OF GEORGIA
DEPARTMENT OF TRANSPORTATION
OFFICE: DISTRICT 7

CONSTRUCTION STAGING STAGE I PLAN

BIG SHANTY CONNECTOR
PHASE I

DRAWING No. 19-08

GPLN

10/15/2009 10:35:00 AM USER:dwebb	PRF $$PENTABLE$$	y:\0313 big shanty conn\design\006869 phase 1\dgn\006869st09.dgn	STATE	PROJECT NUMBER	SHEET NO.	TOTAL SHEETS
			GA	CSSTP-0006-00(869)	57	370

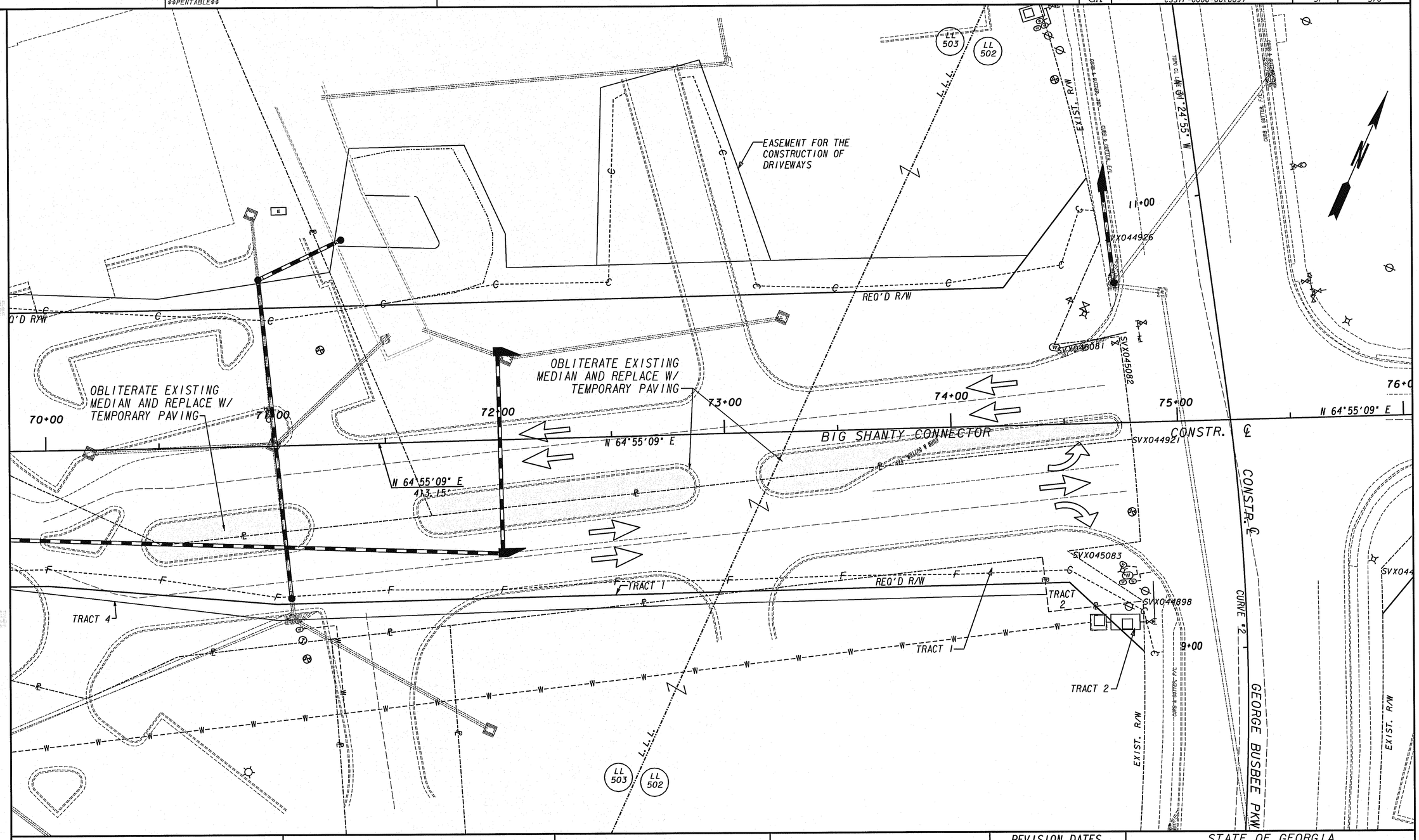

STANDARD LEGEND

STAGE I CONSTRUCTION

TRAFFIC FLOW INDICATORS

GPLN

CROY ENGINEERING Engineers Planners Surveyors

200 NORTH COBB PARKWAY, BLDG. 400, SUITE 413
MARIETTA, GA 30062
PHONE: (770) 971-5407 FAX: (770) 971-0620

SCALE IN FEET
0 20 40 80

REVISION DATES		

STATE OF GEORGIA
DEPARTMENT OF TRANSPORTATION
OFFICE: DISTRICT 7

CONSTRUCTION STAGING STAGE I PLAN

BIG SHANTY CONNECTOR
PHASE I

DRAWING No. 19-09

10/15/2009 10:35:01 AM PRF
USER:dwebb $$PENTABLE$$
y:\0313 big shanty conn\design\006869 phase 1\dgn\006869st10.dgn

STATE	PROJECT NUMBER	SHEET NO.	TOTAL SHEETS
GA	CSSTP-0006-00(869)	58	370

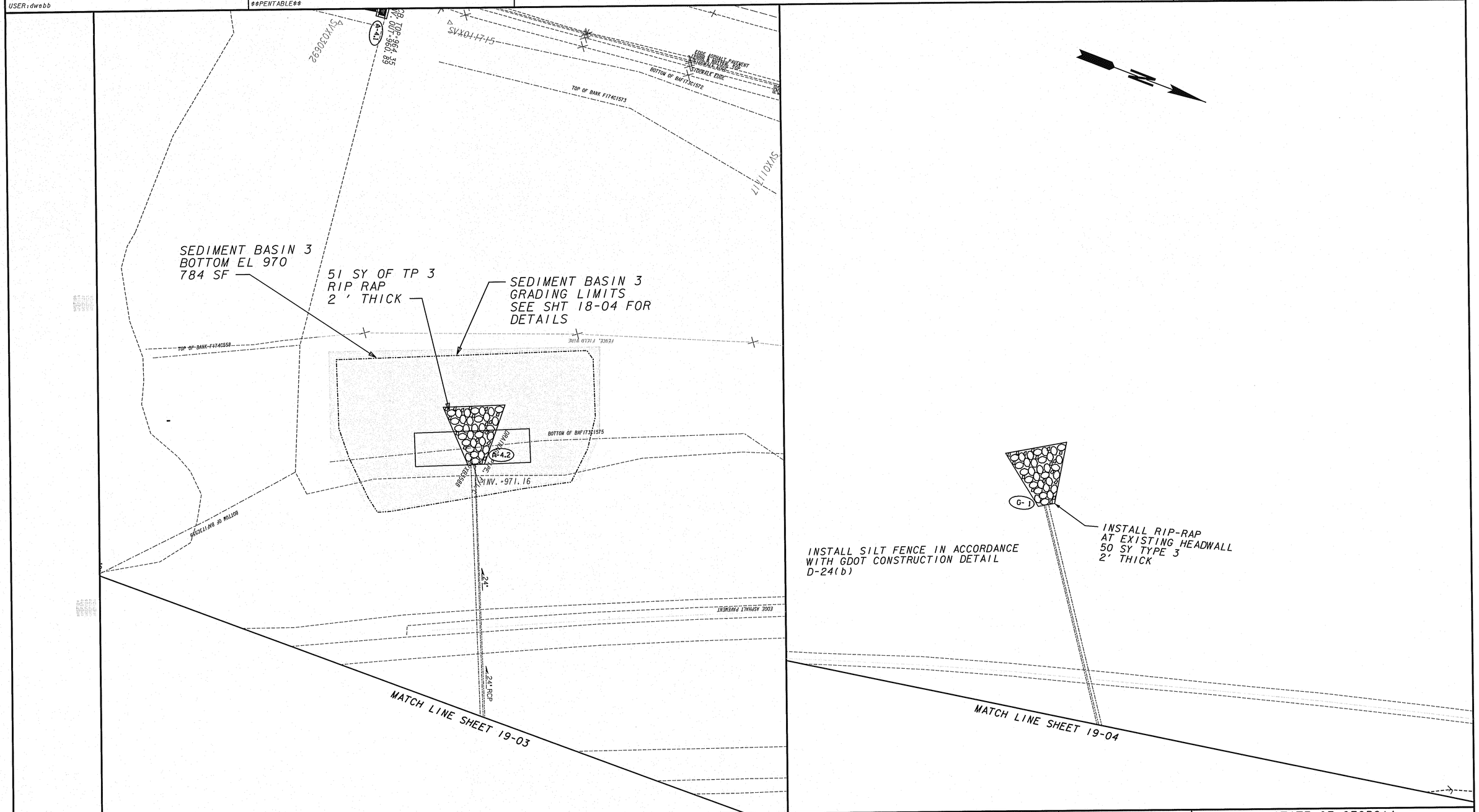

STANDARD LEGEND

STAGE I CONSTRUCTION

TRAFFIC FLOW INDICATORS

CROY ENGINEERING
Engineers Planners Surveyors
200 NORTH COBB PARKWAY, BLDG. 400, SUITE 413
MARIETTA, GA 30062
PHONE: (770) 971-5407 FAX: (770) 971-0620

SCALE IN FEET
0 20 40 80

REVISION DATES

STATE OF GEORGIA
DEPARTMENT OF TRANSPORTATION
OFFICE: DISTRICT 7

CONSTRUCTION STAGING
STAGE I PLAN

BIG SHANTY CONNECTOR
PHASE I

DRAWING No. 19-10

STAGE 2

SEQUENCE OF CONSTRUCTION

1. GRADE AND CONSTRUCT SEDIMENT BASINS 1 AND 2. GRADE AND CONSTRUCT DRAINAGE. ROADWAY AND SIDE SLOPES ON BIG SHANTY CONNECTOR FROM STA 51+26.50 TO TO APPROX. STA. 56+70.00 AND FROM APPROX. STA. 59+00.00 TO 70+00.00 AND FROM STA. 70+00.00 TO GEORGE BUSBEE PKWY ON THE NORTH SIDE. OMITTING THE FINAL LAYER OF PROPOSED ASPHALT (12.5 MM SUPERPAVE 165 LBS./S.Y.) IN THIS STAGE.
2. GRADE AND CONSTRUCT DRAINAGE. PAVEMENT WIDENING AND SIDE SLOPES ON BARRETT LAKES BLVD. FROM STA. 5+61.21 TO APPROX. 11+85.73 OMITTING THE FINAL LAYER OF PROPOSED ASPHALT (12.5 MM SUPER PAVE 165 LBS./S.Y.) IN THIS STAGE
3. SHIFT EXIST. I-75 TRAFFIC OVER TO DETOURS.
4. CONSTRUCT I-75 BRIDGES.
5. CONSTRUCT PERMANENT CONCRETE PAVING ON I-75.

STAGING NOTES

1. ACCESS POINT FOR ALL BUSINESSES WITHIN THE CONSTRUCTION AREA MUST BE ALLOWED AT ALL TIMES UNLESS ALTERNATE ACCESS IS PROVIDED.
2. WORK ZONE HAZARD PROTECTION AND CLEAR ZONE REQUIREMENTS SHALL ADHERE TO GDOT STANDARDS FOR TRAFFIC CONTROL AND THE AASHTO ROADSIDE DESIGN GUIDE, MOST CURRENT VERSION.
3. A MINIMUM WORK ZONE SPEED OF 55 MPH ON I-75 MUST BE MAINTAINED DURING CONSTRUCTION.
4. VEHICLE TRAFFIC MAY BE SHIFTED LATERALLY TO ALLOW FOR CONTINUOUS MOVEMENT AND WORK ZONE CLEARANCES. THE MINIMUM TRAVEL LANE WIDTH SHALL BE ELEVEN (11) FEET.
5. SEE MAINLINE PLAN FOR CONSTRUCTION STATION AND OFFSETS.
6. SEE EARTHWORK CROSS SECTIONS FOR EARTHWORK GRADING.
7. SEE EROSION AND SEDIMENT CONTROL PLANS FOR BMP LOCATIONS.
8. CONTRACTOR TO ENSURE POSITIVE DRAINAGE DURING ALL STAGES OF CONSTRUCTION.

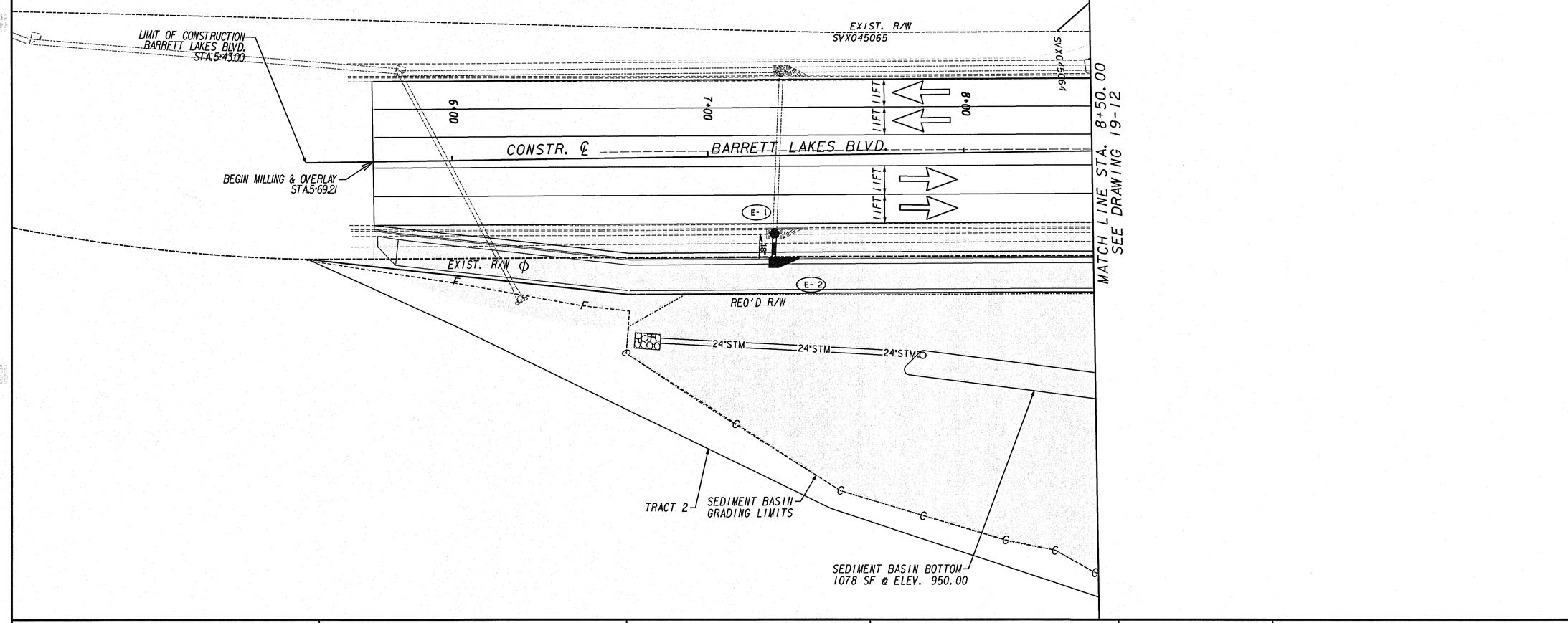

STANDARD LEGEND

STAGE 2 CONSTRUCTION

TRAFFIC FLOW INDICATORS

CROY ENGINEERING
Engineers Planners Surveyors
200 NORTH COBB PARKWAY, BLDG. 400, SUITE 413
MARIETTA, GA 30062
PHONE: (770) 971-5407 FAX: (770) 971-0820

SCALE IN FEET
0 20 40 80

REVISION DATES
10/14/09

STATE OF GEORGIA
DEPARTMENT OF TRANSPORTATION
OFFICE: DISTRICT 7

CONSTRUCTION STAGING STAGE 2 PLAN

BIG SHANTY CONNECTOR
PHASE 1

DRAWING No. 19-11

GPLN

10/15/2009 10:35:05 AM PRF y:\0313 big shanty conn\design\006869 phase 1\dgn\006869st12.dgn
USER:dwebb $$PENTABLE$$

STATE	PROJECT NUMBER	SHEET NO.	TOTAL SHEETS
GA	CSSTP-0006-00(869)	60	370

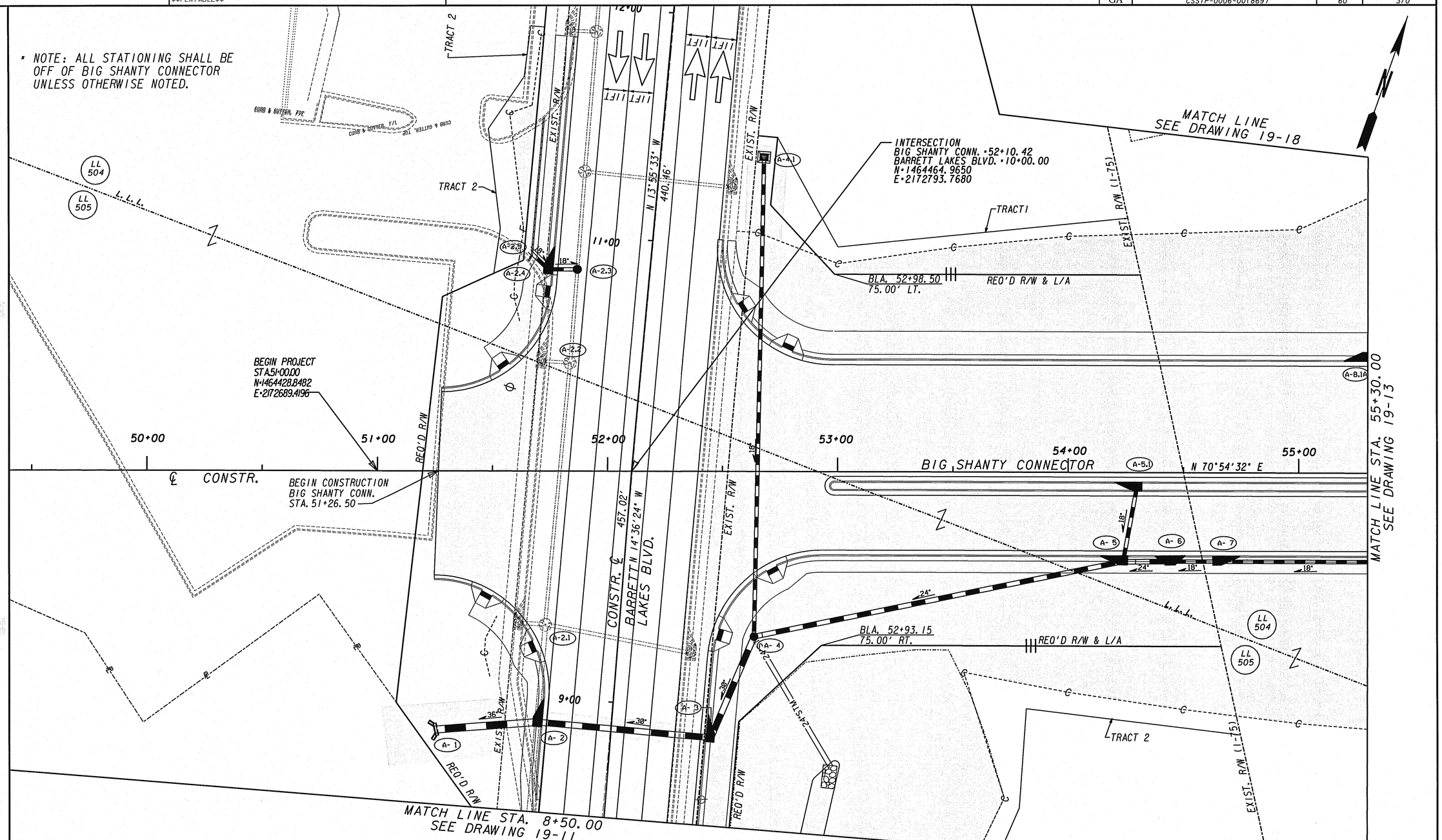

STANDARD LEGEND

STAGE 2 CONSTRUCTION

TRAFFIC FLOW INDICATORS

CROY ENGINEERING
Engineers Planners Surveyors
200 NORTH COBB PARKWAY, BLDG. 400, SUITE 413
MARIETTA, GA 30062
PHONE: (770) 971-5407 FAX: (770) 971-0620

SCALE IN FEET
0 20 40 80

REVISION DATES

STATE OF GEORGIA
DEPARTMENT OF TRANSPORTATION
OFFICE: DISTRICT 7

CONSTRUCTION STAGING
STAGE 2 PLAN

BIG SHANTY CONNECTOR
PHASE 1

DRAWING No. 19-12

10/15/2009 10:35:07 AM	PRF	y:\0313 big shanty conn\design\006869 phase 1\dgn\006869st13.dgn	STATE	PROJECT NUMBER	SHEET NO.	TOTAL SHEETS
USER:dwebb	$$PENTABLE$$		GA	CSSTP-0006-00(869)	61	370

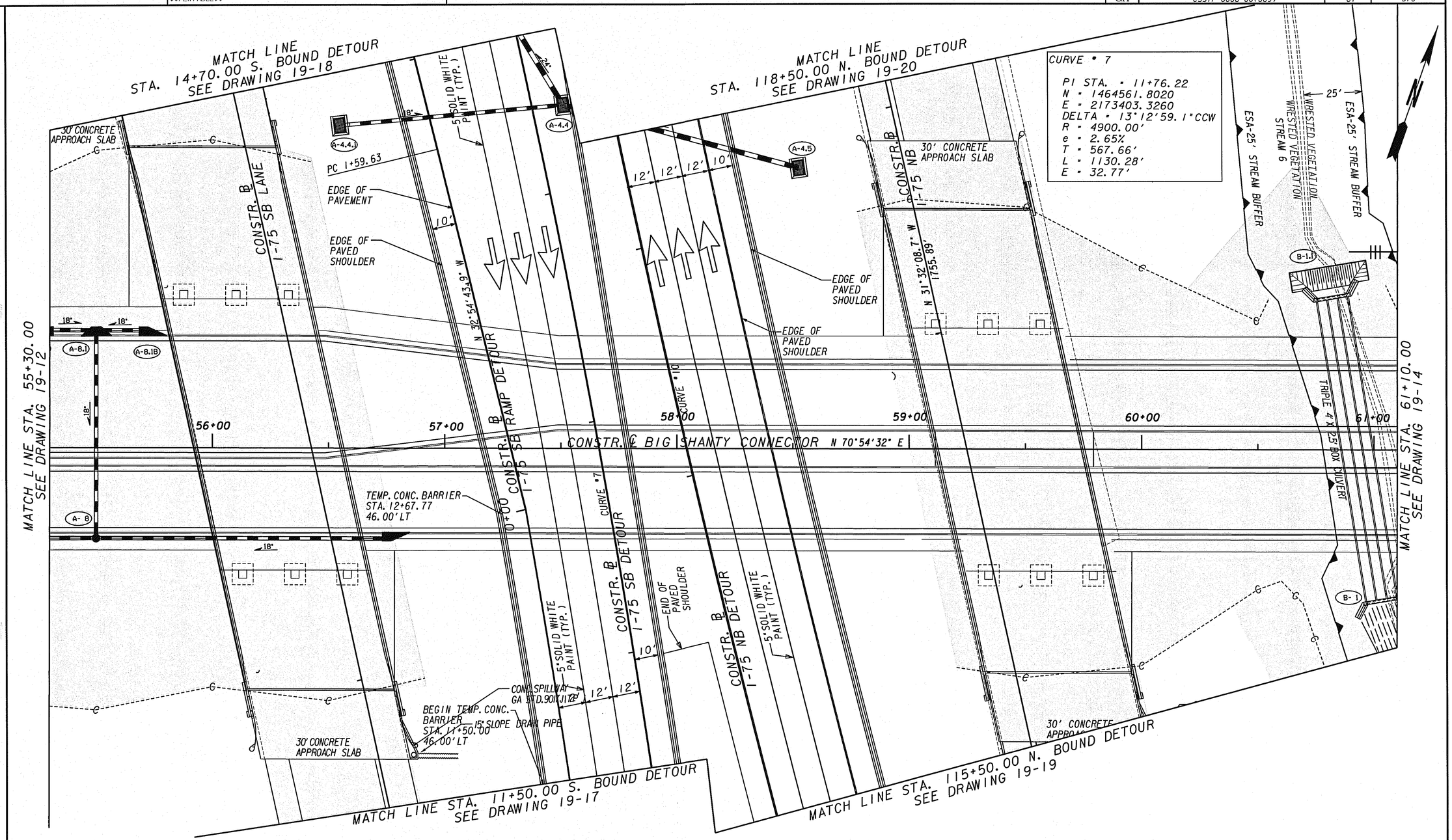

STANDARD LEGEND

STAGE 2 CONSTRUCTION

TRAFFIC FLOW INDICATORS

CROY ENGINEERING Engineers Planners Surveyors

200 NORTH COBB PARKWAY, BLDG. 400, SUITE 413
MARIETTA, GA 30062
PHONE: (770) 971-5407 FAX: (770) 971-0620

SCALE IN FEET
0 20 40 80

REVISION DATES		

STATE OF GEORGIA
DEPARTMENT OF TRANSPORTATION
OFFICE: DISTRICT 7

CONSTRUCTION STAGING STAGE 2 PLAN

BIG SHANTY CONNECTOR
PHASE 1

DRAWING No. 19-13

GPLN

10/15/2009 10:35:10 AM	PRF	y:\0313 big shanty conn\design\006869 phase 1\dgn\006869st14.dgn	STATE	PROJECT NUMBER	SHEET NO.	TOTAL SHEETS
USER:dwebb	$$PENTABLE$$		GA	CSSTP-0006-00(869)	62	370

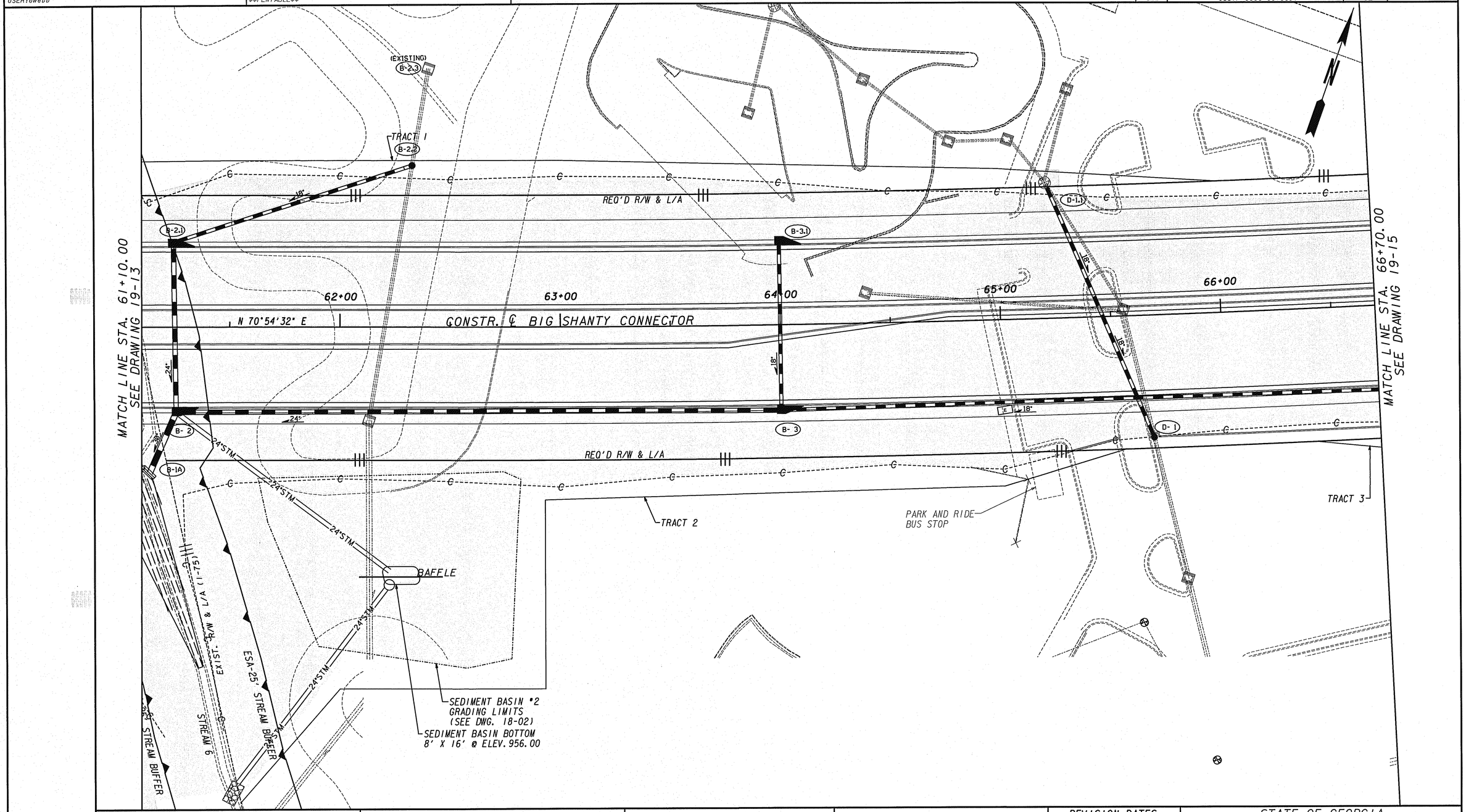

STANDARD LEGEND

STAGE 2 CONSTRUCTION

TRAFFIC FLOW INDICATORS

CROY ENGINEERING Engineers Planners Surveyors

200 NORTH COBB PARKWAY, BLDG. 400, SUITE 413
MARIETTA, GA 30062
PHONE: (770) 971-5407 FAX: (770) 971-0620

SCALE IN FEET

0 20 40 80

REVISION DATES		

STATE OF GEORGIA
DEPARTMENT OF TRANSPORTATION

OFFICE: DISTRICT 7

CONSTRUCTION STAGING STAGE 2 PLAN

BIG SHANTY CONNECTOR
PHASE 1

DRAWING No. 19-14

GPLN

10/15/2009	10:35:12 AM	PRF	y:\0313 big shanty conn\design\006869 phase 1\dgn\006869st15.dgn	STATE	PROJECT NUMBER	SHEET NO.	TOTAL SHEETS
USER:dwebb		$$PENTABLE$$		GA	CSSTP-0006-00(869)	63	370

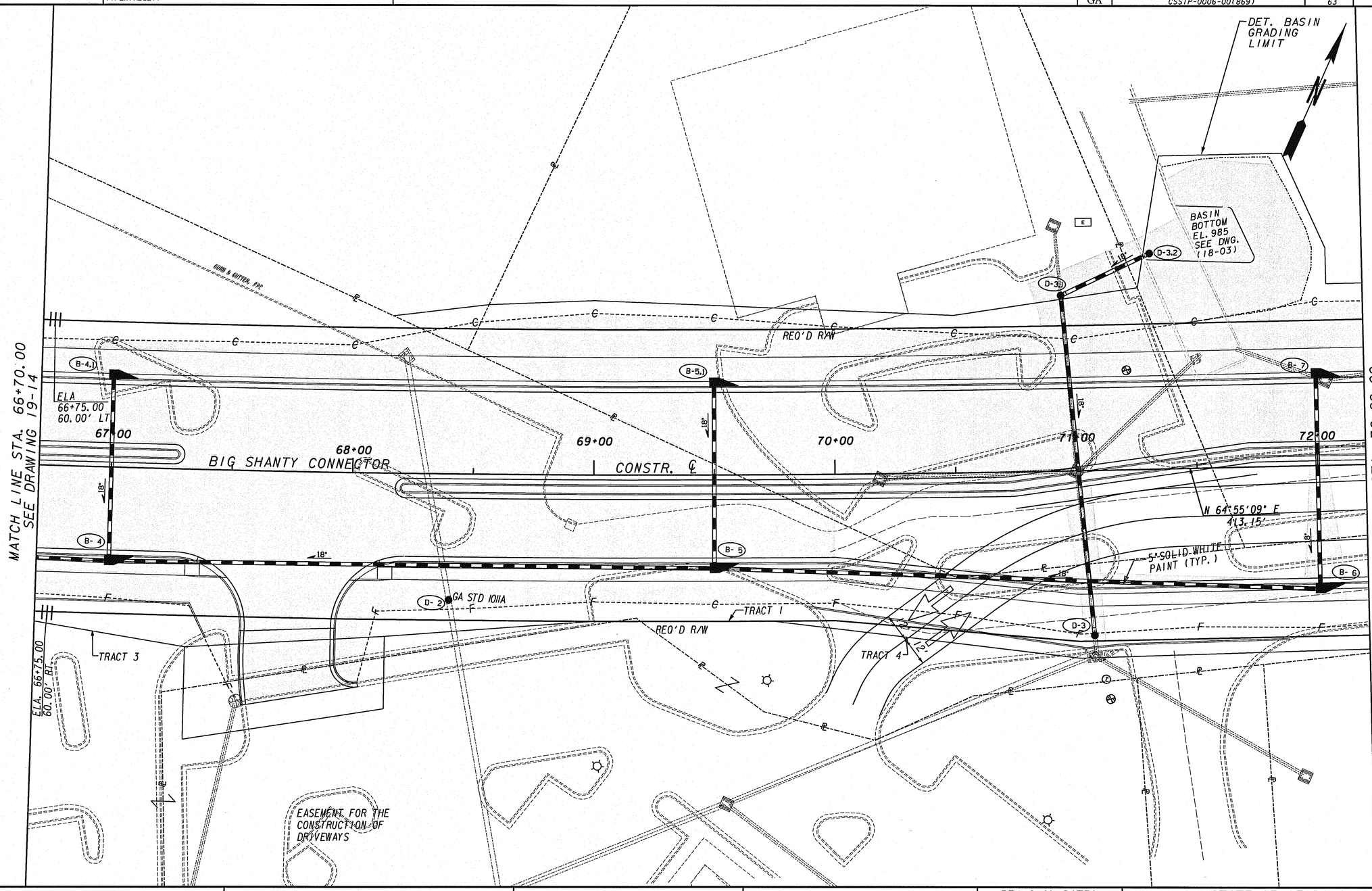

STANDARD LEGEND

STAGE 2 CONSTRUCTION

TRAFFIC FLOW INDICATORS

CROY ENGINEERING Engineers Planners Surveyors

200 NORTH COBB PARKWAY, BLDG. 400, SUITE 413
MARIETTA, GA 30062
PHONE: (770) 971-5407 FAX: (770) 971-0620

SCALE IN FEET
0 20 40 80

REVISION DATES		

STATE OF GEORGIA
DEPARTMENT OF TRANSPORTATION
OFFICE: DISTRICT 7

CONSTRUCTION STAGING STAGE 2 PLAN

BIG SHANTY CONNECTOR
PHASE 1

DRAWING No. 19-15

GPLN

10/15/2009 10:35:13 AM PRF y:\0313 big shanty conn\design\006869 phase 1\dgn\006869st16.dgn
USER:dwebb $$PENTABLE$$

STATE	PROJECT NUMBER	SHEET NO.	TOTAL SHEETS
GA	CSSTP-0006-00(869)	64	370

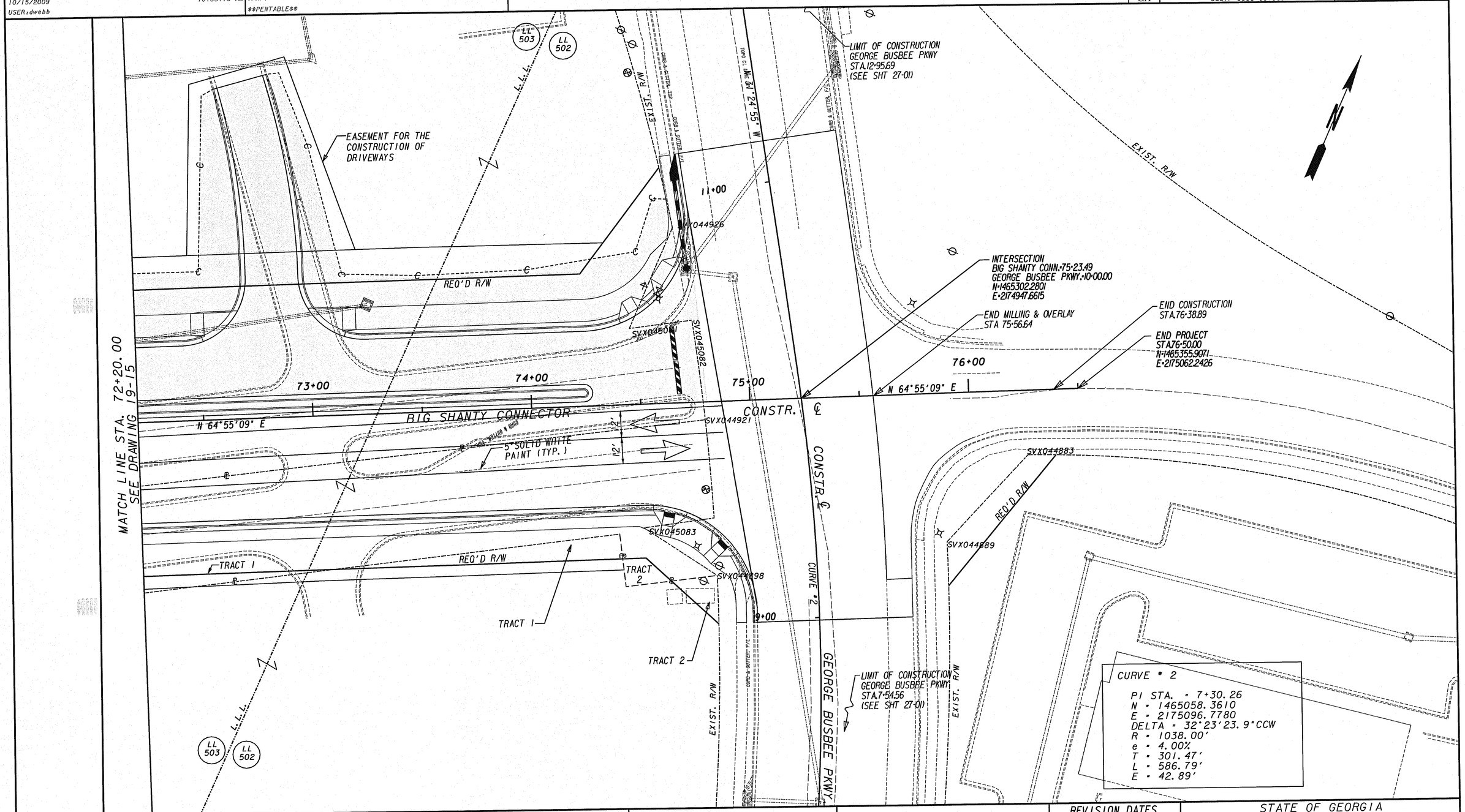

STANDARD LEGEND

STAGE 2 CONSTRUCTION

TRAFFIC FLOW INDICATORS

CROY ENGINEERING
Engineers Planners Surveyors
200 NORTH COBB PARKWAY, BLDG. 400, SUITE 413
MARIETTA, GA 30062
PHONE: (770) 971-5407 FAX: (770) 971-0620

SCALE IN FEET
0 20 40 80

REVISION DATES

STATE OF GEORGIA
DEPARTMENT OF TRANSPORTATION
OFFICE: DISTRICT 7

CONSTRUCTION STAGING
STAGE 2 PLAN

BIG SHANTY CONNECTOR
PHASE 1

DRAWING No. 19-16

GPLN