STATE	PROJECT NUMBER	SHEET NO.	TOTAL SHEETS
GA	NH000-0073-031(242)		

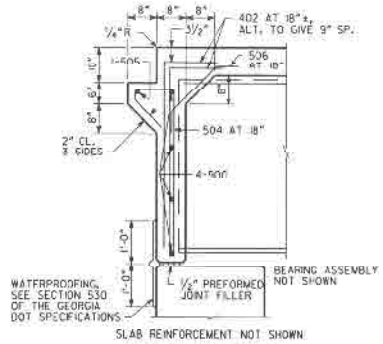

SECTION AT ENDWALL

(BENTS 1 & 4)

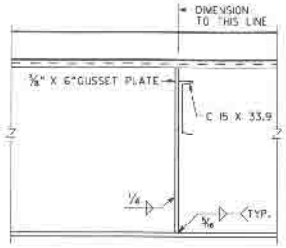

SECTION THRU DIAPHRAGM

(ALL SPANS)

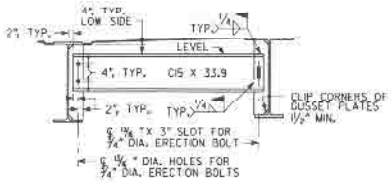

DIAPHRAGM DETAILS

NOTE: WELD DIAPHRAGMS BEFORE DECK IS POURED.

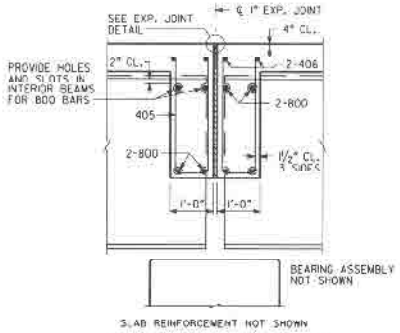

SECTION THRU EDGE BEAM

(BENTS 2 & 3)

JOINT OPENING		
TEMPERATURE (°F)	BENT 2 W (IN.)	BENT 3 W (IN.)
30	0.992	.038
60	0.750	0.750
90	0.508	0.462

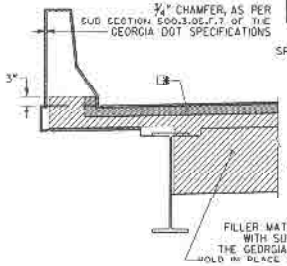

TRANSVERSE SECTION

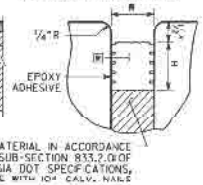

LONGITUDINAL SECTION

EXPANSION JOINT DETAILS

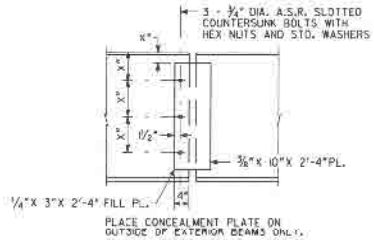

PLACE CONCEALMENT PLATE ON OUTSIDE OF EXTERIOR BEAMS ONLY.

CONCEALMENT PLATE DETAIL

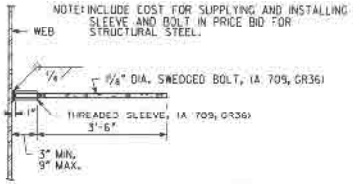

EDGE BEAM BAR LAP DETAIL

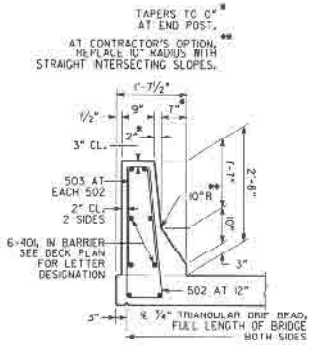

BARRIER DETAIL

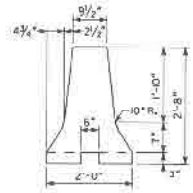

HOV BARRIER DETAIL

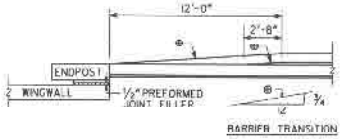

BARRIER TRANSITION

BARRIER TRANSITION DETAIL

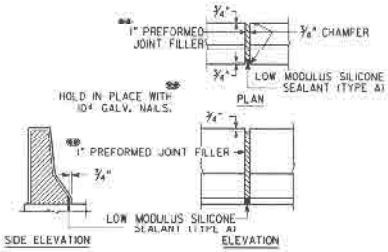

DETAILS OF 1" EXPANSION JOINT IN BARRIER

NOTE: IMPORTANT NOTICE: THIS DRAWING IS AN INCOMPLETE WORK-IN-PROGRESS AND ITS USE IS SUBJECT TO NOTE 1 ON DRAWING NO. 1-01.

BRIDGE NO. 33

REVISIONS						
NO.	DATE	DESCRIPTION	DRG	CHKR	SUPV	APPR
A	6/30/05	Progress Drawings for Review	KLM	JCK	DLL	[illegible]
B	9/26/05	ROW SUBMITTAL	KLM	JCK	DLL	[illegible]
C	10/30/09	PLOTTED FOR COSTS TERMINATION FOR GOVERNMENT SOLUTION	KLM			

ADPS ESTABLISHMENT	DATE
DRAWN BY	DATE
CHECKED BY	DATE
SUPERVISOR	DATE
APPROVE	DATE

GTP Georgia Transportation Partners

NORTHWEST I-75/I-575 CORRIDOR

DEPARTMENT OF TRANSPORTATION
STATE OF GEORGIA

JBT J.B. Trimble, Inc.
2550 Heritage Ct, SE Suite 250
Atlanta GA 30339-3062
(770) 952-1022

BRIDGE SHEET 6 OF 8

I-75 / I-575 NORTHWEST CORRIDOR

I-75 REVERSIBLE OVER FREY RD

MISCELLANEOUS DETAILS

COBB COUNTY NH000-0073-031(242)

DRAWING NO. 35-213