STATE	PROJECT NUMBER	SHEET NO.	TOTAL SHEETS
GA	NH000-0073-03(242)		

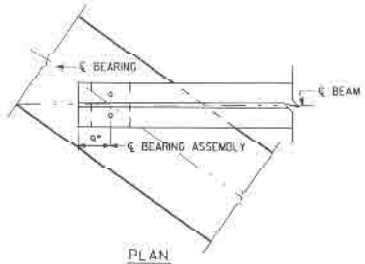

PLAN
BENTS 1 & 4

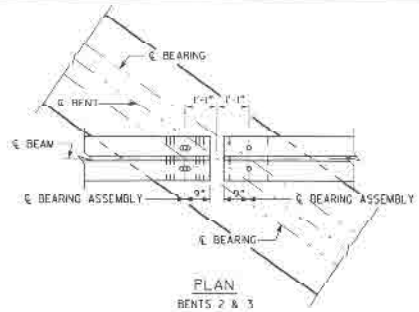

PLAN
BENTS 2 & 3

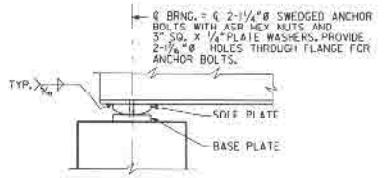

ELEVATION
BENTS 1 & 4

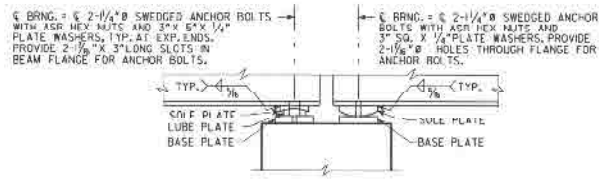

ELEVATION
BENTS 2 & 3

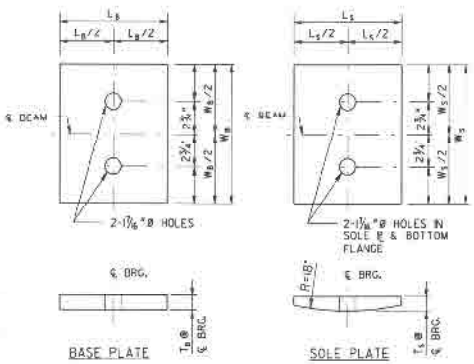

TYPICAL FIXED BEARING ASSEMBLY
BENTS 1,2 AH & 3 AH

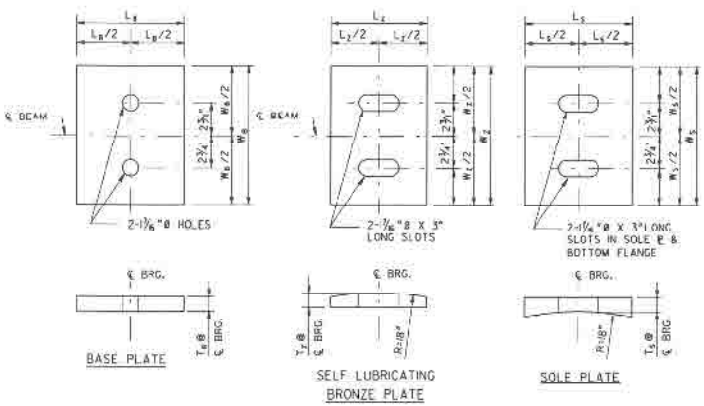

TYPICAL EXPANSION BEARING ASSEMBLY
BENTS 2 BK, 3 BK & 4

NOTES:

1. ALL BEARING ASSEMBLY COMPONENTS SHALL BE ASTM A709 GRADE 36 STEEL.
2. SELF-LUBRICATING PLATES SHALL BE CAST BRONZE.
3. ANCHOR BOLTS, ASR HEX NUTS AND PLATE WASHERS SHALL BE ASTM A276 TYPE 304 STAINLESS STEEL. PROVIDE 2½" MIN. PROJECTION OF ANCHOR BOLT ABOVE TOP OF BEAM FLANGE. SET ANCHOR BOLTS 12" INTO CAP.

BEARING ASSEMBLY DIMENSIONS (IN.)

BENT LOCATION	BEARING TYPE	BASE PLATE			SOLE PLATE			BRONZE PLATE			TOTAL BEARING DEPTH
		W_B	L_B	T_B	W_S	L_S	T_S	W_Z	L_Z	T_Z	
BENT 1	FIXED	12.00	11.75	2.50	12.0	11.75	2.00	-	-	-	4.50
BENT 2 BK	EXPANSION	12.00	12.00	1.00	12.0	9.00	1.50	12.0	7.0	1.0	3.50
BENT 2 AH	FIXED	18.50	8.75	1.75	18.5	8.75	3.00	-	-	-	4.75
BENT 3 BK	EXPANSION	18.50	10.00	1.25	18.5	10.0	2.25	12.0	8.0	1.25	4.75
BENT 3 AH	FIXED	14.00	10.50	2.25	14.0	10.50	2.25	-	-	-	4.50
BENT 4	EXPANSION	14.00	10.50	1.00	14.0	9.00	1.75	12.0	7.0	1.0	3.75

NOTE !! IMPORTANT NOTICE: THIS DRAWING IS AN INCOMPLETE WORK-IN-PROGRESS AND ITS USE IS SUBJECT TO NOTE 1 ON DRAWING NO. 1-01.

BRIDGE NO. 33

HDAS CONSTRUCTION	07-01-09	
DRAWN BY	DATE	
CHECKED BY	DATE	
SUPERVISOR	DATE	
APPROVED	DATE	

REVISIONS

NO.	DATE	DESCRIPTION	DRG	CHKR	SUPV	APPR
C	3-30-09	[illegible]	KDM	JCR	DLC	[illegible]
B	8-25-08	REV. SUBMISSION	KDM	JCR	DLC	[illegible]
A	11-30-07	PLOTTED FOR CONSTR. TERMINATION FOR CONVENIENCE DIRECTION	KDM			

GTP Georgia Transportation Partners

NORTHWEST I-75/I-575 CORRIDOR

DEPARTMENT OF TRANSPORTATION
STATE OF GEORGIA

JBT J.B. Trimble, Inc.
2550 Heritage Ct. SE Suite 250
Atlanta GA 30339-3062
(770) 952-1022

BRIDGE SHEET
5 OF 8

I-75 / I-575 NORTHWEST CORRIDOR

I-75 REVERSIBLE OVER FREY RD
BEARING INFORMATION

COBB COUNTY NH000-0073-03(242)

DRAWING NO. 35-212