STATE	PROJECT NUMBER	SHEET NO.	TOTAL SHEETS
GA	NH000-0073-03(242)		

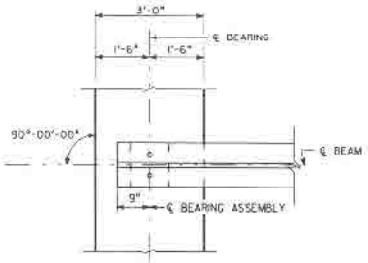

PLAN
BENTS 1 & 4

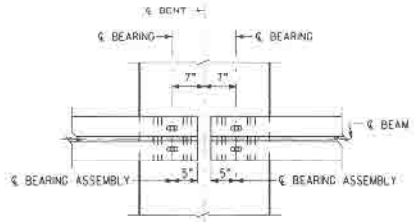

PLAN
BENTS 2

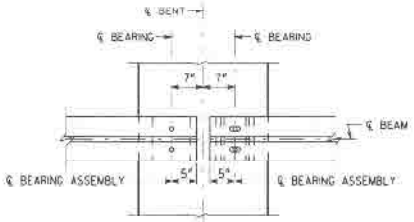

PLAN
BENTS 3

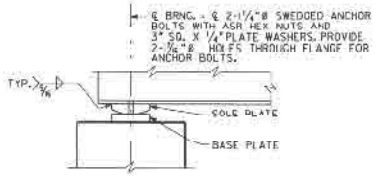

ELEVATION
BENTS 1 & 4

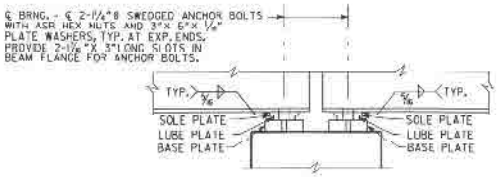

ELEVATION
BENT 2

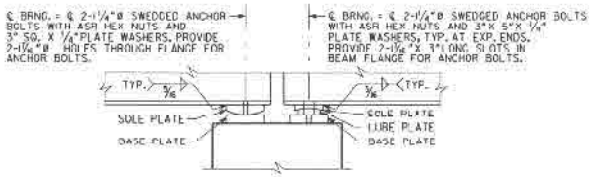

ELEVATION
BENT 3

NOTES:

1. ALL BEARING ASSEMBLY COMPONENTS SHALL BE ASTM A709 GRADE 36 STEEL.
2. SELF-LUBRICATING PLATES SHALL BE CAST BRONZE.
3. ANCHOR BOLTS, ASR HEX NUTS AND PLATE WASHERS SHALL BE ASTM A276 TYPE 304 STAINLESS STEEL. PROVIDE 2½" MIN. PROJECTION OF ANCHOR BOLT ABOVE TOP OF BEAM FLANGE. SET ANCHOR BOLTS 12" INTO CAP.

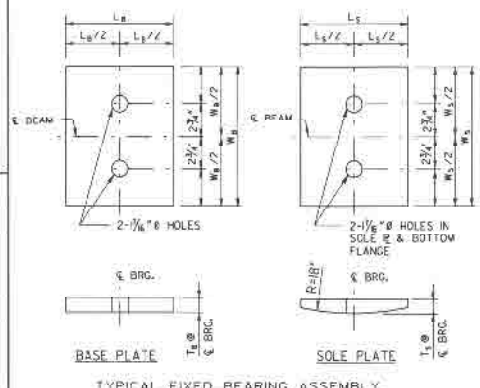

TYPICAL FIXED BEARING ASSEMBLY
BENTS 1, 3 BK & 4

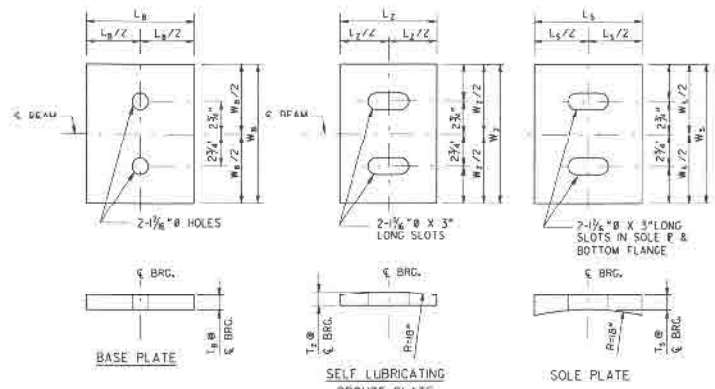

TYPICAL EXPANSION BEARING ASSEMBLY

BEARING ASSEMBLY DIMENSIONS (IN.)

BENT LOCATION	BEAM	BEARING TYPE	BASE PLATE W_B	BASE PLATE L_B	BASE PLATE T_B	SOLE PLATE W_S	SOLE PLATE L_S	SOLE PLATE T_S	BRONZE PLATE W_Z	BRONZE PLATE L_Z	BRONZE PLATE T_Z	TOTAL BEARING DEPTH
BENT 1	1 - 6	FIXED	12.00	12.00	2.50	12.0	12.0	2.25	-	-	-	4.75
BENT 3 BK	5 & 6											
BENT 4	5 & 6											
BENT 2 BK	1 - 6	EXPANSION	12.00	12.00	1.00	12.0	9.0	1.50	12.0	7.0	1.00	3.50
BENT 2 AH	5 & 6											
BENT 3 AH	5 & 6											
BENT 2 AH	3 & 4	EXPANSION	14.00	11.25	1.00	14.0	10.0	1.75	12.0	8.0	1.25	4.00
BENT 3 AH	3 & 4											
BENT 2 AH	1 & 2	EXPANSION	16.00	10.25	1.00	16.0	10.0	2.00	12.0	8.0	1.25	4.25
BENT 3 AH	1 & 2											
BENT 3 BK	3 & 4	FIXED	14.00	11.25	2.25	14.0	11.25	2.50	-	-	-	4.75
BENT 4	3 & 4											
BENT 3 BK	1 & 2	FIXED	16.00	10.25	2.25	16.0	10.25	2.75	-	-	-	5.00
BENT 4	1 & 2											

NOTE IMPORTANT NOTICE: THIS DRAWING IS AN INCOMPLETE WORK-IN-PROGRESS AND ITS USE IS SUBJECT TO NOTE 1 ON DRAWING NO. 1-01.

BRIDGE NO. 31

WORK CONTINUED BY		1/26/09
DRAWN BY		DATE
CHECKED BY		DATE
SUPERVISOR		DATE
APPROVED		DATE

REVISIONS

NO.	DATE	DESCRIPTION	DRG	CHK	SUPV	APPR
A	6/30/09	[illegible]	ALW	JGR	SLK	SVK
B	9/25/09	[illegible]	ALW	JGR	SLK	SVK
C	10/30/09	[illegible]	ALW			
		[illegible]				

GTP Georgia Transportation Partners

NORTHWEST 1-75/1-575 CORRIDOR

DEPARTMENT OF TRANSPORTATION
STATE OF GEORGIA

JBT J.B. Trimble, Inc.
2550 Heritage Ct. SE Suite 250
Atlanta GA 30339-3062
(770) 952-1022

BRIDGE SHEET
5 OF 9

1-75 / 1-575 NORTHWEST CORRIDOR

1-75 REVERSIBLE OVER NOONDAY CREEK
BEARING INFORMATION

COBB COUNTY NH000-0073-03(242)

DRAWING NO.
35-198