STATE	PROJECT NUMBER	SHEET NO.	TOTAL SHEETS
GA	NH000-0575-01(028)		

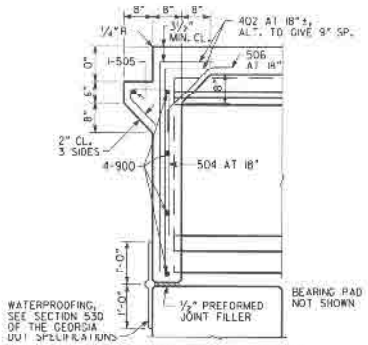

SLAB REINFORCEMENT NOT SHOWN

SECTION AT ENDWALL

(BENTS 1 & 7)

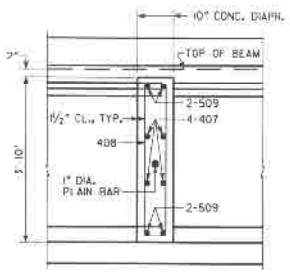

SLAB REINFORCEMENT NOT SHOWN

SECTION THRU DIAPHRAGM

(ALL SPANS)

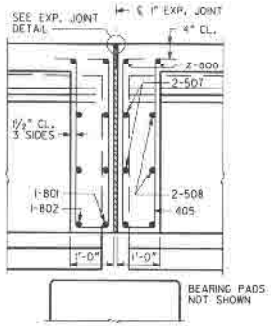

SLAB REINFORCEMENT NOT SHOWN

SECTION THRU EDGE BEAM

(BENTS 2 THRU 6)

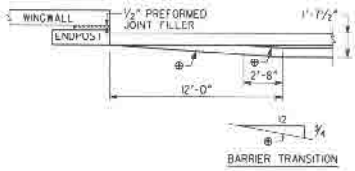

BARRIER TRANSITION DETAIL

JOINT OPENING		
TEMPERATURE (°F)	BTS. 2-5	BENT 6
	W (IN.)	W (IN.)
30	0.94	1.13
60	0.76	0.76
90	0.56	0.37

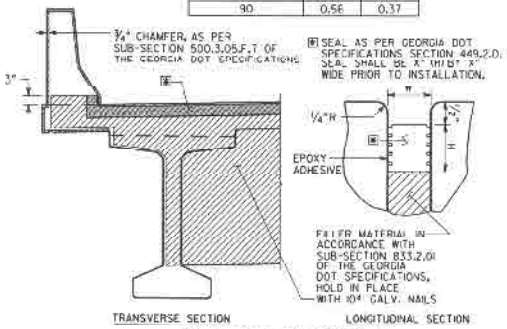

EXPANSION JOINT DETAILS

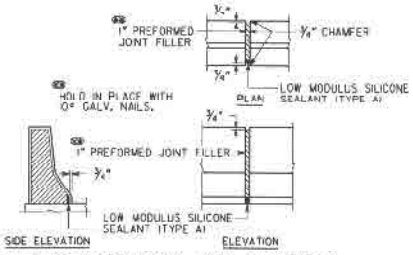

DETAILS OF 1" EXPANSION JOINT IN BARRIER

* TAPERS TO 0" AT END POST.

** AT CONTRACTOR'S OPTION, REPLACE 10" RADIUS WITH STRAIGHT INTERSECTING SLOPES.

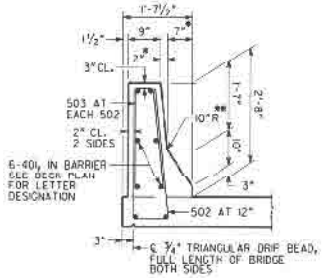

BARRIER DETAIL

NOTE !! IMPORTANT NOTICE: THIS DRAWING IS AN INCOMPLETE WORK-IN-PROGRESS AND ITS USE IS SUBJECT TO NOTE 1 ON DRAWING NO. 1-01.

BRIDGE NO. 42

AREA ENGINEER (PE/EIT)	11/20/09	
DRAWN BY	DATE	
CHECKED BY	DATE	
SUPERVISOR	DATE	
APPROVED	DATE	

REVISIONS

NO.	DATE	DESCRIPTION	ORIG	CHKR	SUPV	APPR
4	07/30/09	Responses Drawings 1-01 to Revision 2	ATW	JCR	DJE	TJL
3	9/25/09	90% SUBMITTAL	ATW	JCR	DJE	TJL
2	03/09	PLOTTED PER GDOT'S TERMINATION FOR CONVENIENCE DIRECTION	ATW			
1						

GTP Georgia Transportation Partners

NORTHWEST 1-75/1-575 CORRIDOR

DEPARTMENT OF TRANSPORTATION
STATE OF GEORGIA

JBT J.B. Trimble, Inc.
2550 Heritage Ct. SE Suite 250
Atlanta GA 30339-3062
(770) 952-1022

BRIDGE SHEET 4 OF 7

1-75 / 1-575 NORTHWEST CORRIDOR

1-575 REVERSIBLE OVER LITTLE RIVER

MISCELLANEOUS DETAILS

CHEROKEE COUNTY NH000-0575-01(028)

FRAME NO. 35-41