STATE	PROJECT NUMBER	SHEET NO.	TOTAL SHEETS
GA	NH000-0575-01(028)		

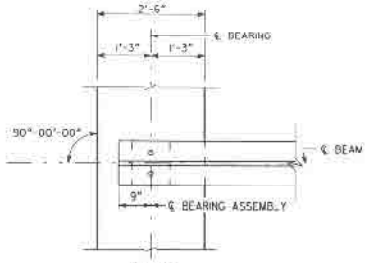

PLAN
BENTS 1 & 4

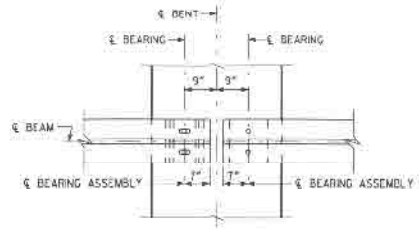

PLAN
BENTS 2

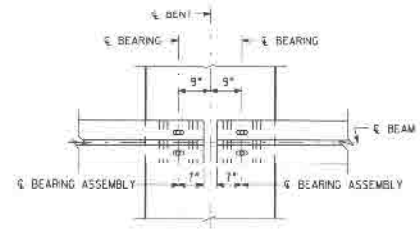

PLAN
BENTS 3

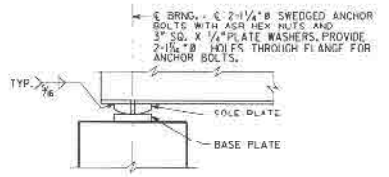

ELEVATION
BENTS 1 & 4

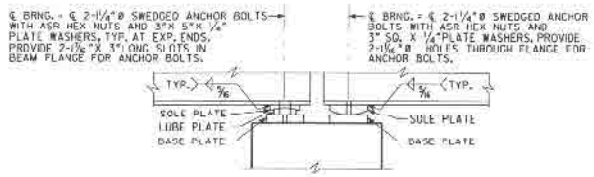

ELEVATION
BENT 2

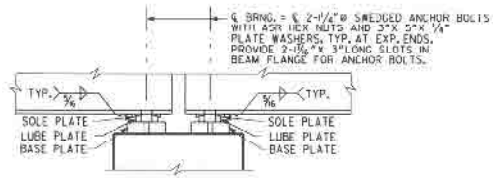

ELEVATION
BENT 3

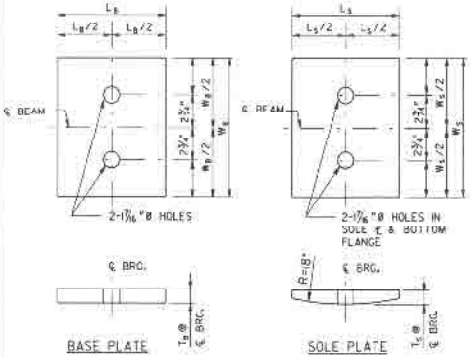

TYPICAL FIXED BEARING ASSEMBLY
BENTS 1,2 AH & 4

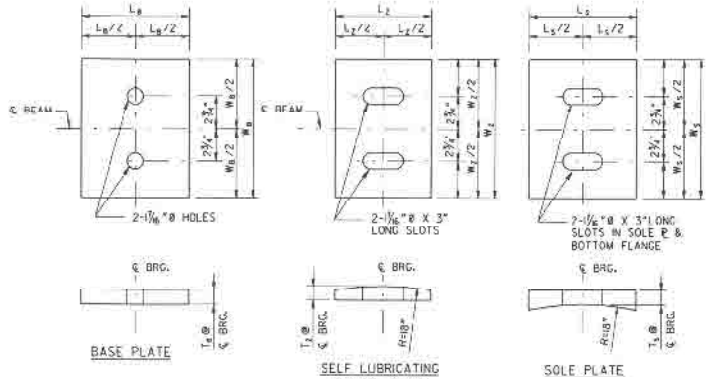

TYPICAL EXPANSION BEARING ASSEMBLY
BENTS 2 BK & 3

NOTES:

1. ALL BEARING ASSEMBLY COMPONENTS SHALL BE ASTM A709 GRADE 36 STEEL.
2. SELF-LUBRICATING PLATES SHALL BE CAST BRONZE.
3. ANCHOR BOLTS, ASR HEX NUTS AND PLATE WASHERS SHALL BE ASTM A276 TYPE 304 STAINLESS STEEL. PROVIDE 2½" MIN. PROJECTION OF ANCHOR BOLT ABOVE TOP OF BEAM FLANGE. SET ANCHOR BOLTS 0" INTO CAP.

BEARING ASSEMBLY DIMENSIONS (IN.)

BENT LOCATION	BEARING TYPE	BASE PLATE			SOLE PLATE			BRONZE PLATE			TOTAL BEARING DEPTH
		W_8	L_8	T_8	W_5	L_5	T_5	W_7	L_7	T_7	
BENT 1	FIXED	10.50	9.00	2.00	10.5	9.00	2.00	-	-	-	4.00
BENT 2 BK	EXPANSION	10.50	9.00	1.00	10.5	9.00	1.50	10.5	7.0	1.0	3.50
BENT 2 AH	FIXED	14.00	9.75	2.00	14.0	9.75	2.25	-	-	-	4.25
BENT 3 BK	EXPANSION	14.00	9.75	1.00	14.0	8.00	1.75	12.0	6.0	1.0	3.75
BENT 3 AH	EXPANSION	10.375	9.00	1.00	10.375	9.00	1.50	10.0	7.0	1.0	3.50
BENT 4	FIXED	10.375	8.50	1.75	10.375	8.50	2.00	-	-	-	3.75

NOTE & IMPORTANT NOTICE: THIS DRAWING IS AN INCOMPLETE WORK-IN-PROGRESS AND ITS USE IS SUBJECT TO NOTE 1 ON DRAWING NO. 1-01.

BRIDGE NO. 37

LATING TRANSITION METHOD	1/20/09	
DRAWN BY	DATE	
CHECKED BY	DATE	
SUPERVISOR	DATE	
APPROVED	DATE	

REVISIONS

NO.	DATE	DESCRIPTION	DRGN	CHKR	SUPV	APPR
A	6/25/08	PROPOSED DIMENSIONS [illegible]	AHM	[illegible]	[illegible]	[illegible]
B	9/25/08	REV. DIMENSIONS	AHM	[illegible]	[illegible]	[illegible]
C	1/20/09	REVISED TOP SOLE TERMINATION FOR CONVENIENCE DIRECTION	AHM			

Georgia Transportation Partners

DEPARTMENT OF TRANSPORTATION
STATE OF GEORGIA

JBT J.B. Trimble, Inc.
2550 Heritage Ct. SE Suite 250
Atlanta GA 30339-3062
(770) 952-1022

BRIDGE SHEET 6 OF 9

I-75 / I-575 NORTHWEST CORRIDOR

I-575 REVERSIBLE OVER BIG SHANTY RD
BEARING INFORMATION

COBB COUNTY NH000-0575-01(028)

DRAWING NO. 35-18