STATE	PROJECT NUMBER	SHEET NO.	TOTAL SHEETS
GA	NH000-0575-01(028)		

Note 1: IMPORTANT NOTICE:
This drawing is an incomplete work-in-progress and its use is subject to Note 1 on Drawing No. 1-01.

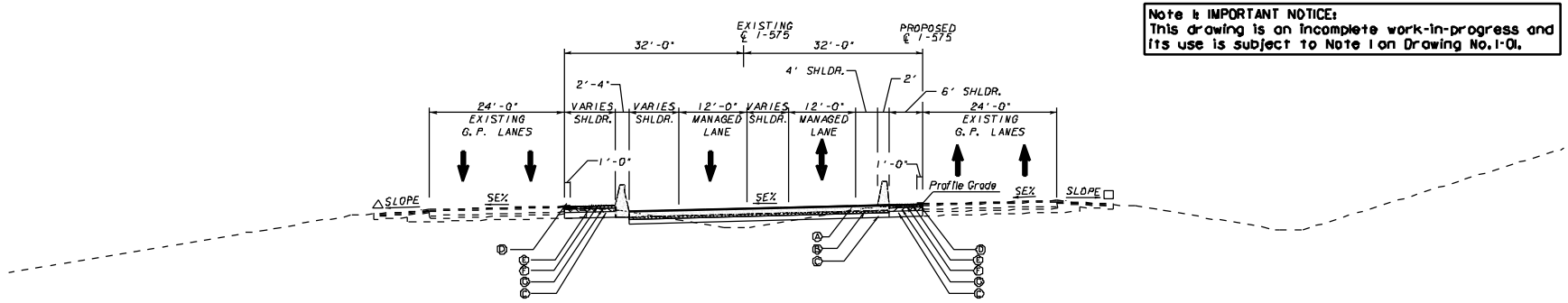

PAVEMENT MATERIAL SCHEDULE
(A) PLAIN PORTLAND CEMENT CONTRETE WITH DOWELS, 12 INCH
(B) 19 MM SUPERPAVE, MIX DESIGN LEVEL A, 330 LBS./SY
(C) GRADED AGGREGATE BASE, 12 INCH
(D) RECYCLED ASPH. CONC. 12.5 mm PEM, 135 LBS./SY
(E) RECYCLED ASPH. CONC. 12.5 mm SMA, 165 LBS./SY
(F) RECYCLED ASPH. CONC. 19 mm SUPERPAVE, 660 LBS./SY
(G) RECYCLED ASPH. CONC. 25 mm SUPERPAVE, 880 LBS./SY

TS-14 I-575 SE SECTION
ONE-LANE REVERSIBLE
APPLIES TO: STA. 1287+80 TO STA. 1291+42

△ SLOPE 3/4" / 1'-0" OR RATE OF S.E. WHICHEVER IS GREATER

□ SLOPE AS FOLLOWS:
S.E. RATE OF 0.03' /FT OR LESS USE 1/2" IN 1'-0"
S.E. RATE OF 0.04' /FT. USE 3/8" IN 1'-0"
S.E. RATE OF 0.05' /FT. USE 1/4" IN 1'-0"
S.E. RATE OF 0.06' /FT. USE 1/8" IN 1'-0"
S.E. RATE OF 0.08' /FT. USE +0.01' /FT

ALGEBRAIC DIFFERENCE IN PAVING AND SHOULDER SLOPES NOT TO EXCEED 0.08' /FT

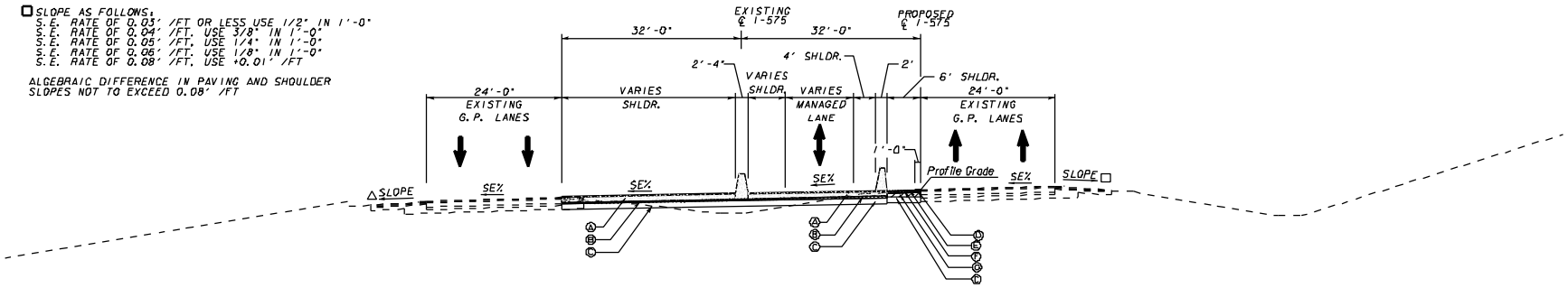

TS-13 I-575 SE SECTION
ONE-LANE REVERSIBLE
APPLIES TO: STA. 1258+37 TO STA. 1287+80

N:\TRA\255717\Drawings\Civil\Rdy\I-575 Plotfiles\713640TYP.575.dgn 25-NOV-2009 13:07

REF FILES: N:\TRA\255717\Drawings\Civil\Rdy\I-575 Plot Files\DRAFT_PLN_I-575.dgn

MINDY SANDERS	11/12/09
DRAWN BY	DATE
CHECKED BY	DATE
SUPERVISOR	DATE
APPROVED	DATE

REVISIONS

NO	DATE	DESCRIPTION	ORIG	CHKR	SUPV	APPR
A	6/30/09	PROGRESS DRAWINGS (ROLL PLOTS)	MHS	SJL	SJL	LFC
B	9/25/09	50% SUBMITTAL	MHS	SJL	SJL	LFC
C	11/30/09	PLOTTED PER ODOT'S TERMINATION FOR CONVENIENCE DIRECTION	MHS			

GTP Georgia Transportation Partners

SCALE IN FEET
0 50 100 200

NORTHWEST I-75/I-575 CORRIDOR

DEPARTMENT OF TRANSPORTATION
STATE OF GEORGIA

JBT J.B. TRIMBLE, INC.
2550 Heritage Court SE
Suite 250
Atlanta, Georgia 30339

I-75 / I-575 NORTHWEST CORRIDOR

TYPICAL SECTIONS

I-575 REVERSIBLE MANAGED LANES

DRAWING No. C5-C7