STATE	PROJECT NUMBER	SHEET NO.	TOTAL SHEETS
GA	NH000-0575-01(028)		

Note 1: IMPORTANT NOTICE:
This drawing is an incomplete work-in-progress and its use is subject to Note 1 on Drawing No. 1-01.

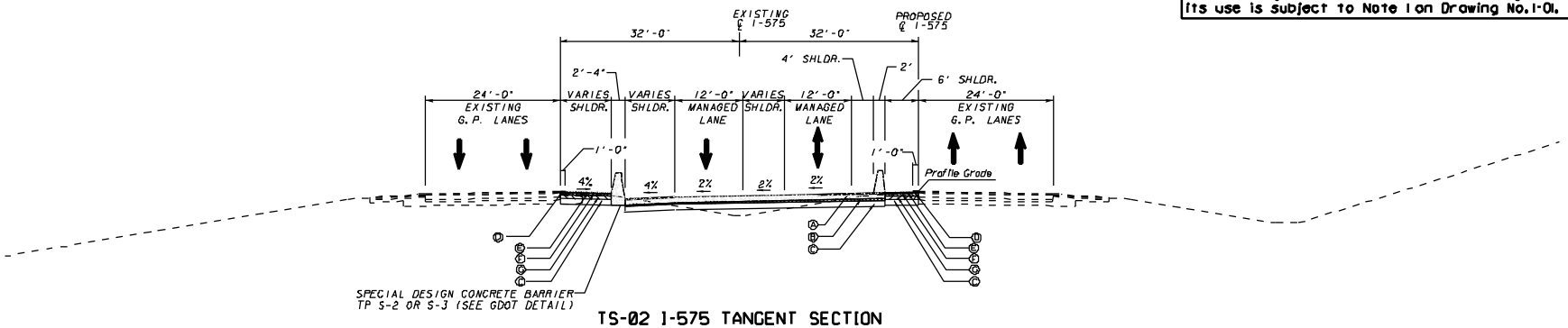

TS-02 I-575 TANGENT SECTION
ONE-LANE REVERSIBLE
APPLIES TO: STA. 1060+00 TO STA. 1066+15
APPLIES TO: STA. 1291+42 TO STA. 1295+32

PAVEMENT MATERIAL SCHEDULE
(A) PLAIN PORTLAND CEMENT CONTRETE WITH DOWELS, 12 INCH
(B) 19 MM SUPERPAVE, MIX DESIGN LEVEL A, 330 LBS./SY
(C) GRADED AGGREGATE BASE, 12 INCH
(D) RECYCLED ASPH. CONC. 12.5 mm PEM, 135 LBS./SY
(E) RECYCLED ASPH. CONC. 12.5 mm SMA, 165 LBS./SY
(F) RECYCLED ASPH. CONC. 19 mm SUPERPAVE, 660 LBS./SY
(G) RECYCLED ASPH. CONC. 25 mm SUPERPAVE, 880 LBS./SY

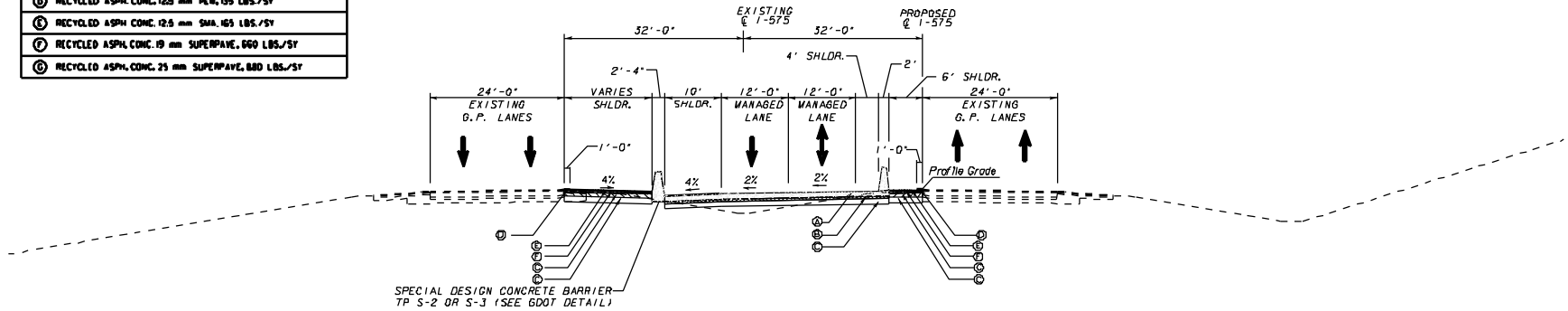

TS-01 I-575 TANGENT SECTION
ONE-LANE REVERSIBLE
APPLIES TO: STA. 1054+00 TO STA. 1060+00

N:\TRA\255717\Drawings\Civil\Rdy\I-575 Plotfiles\713640TYP.575.dgn 25-NOV-2009 13:07

REF FILES: N:\TRA\255717\Drawings\Civil\Rdy\I-575 Plot Files\DRAFT_PLN_I-575.dgn

MINDY SANDERS	11/12/09
DRAWN BY	DATE
CHECKED BY	DATE
SUPERVISOR	DATE
APPROVED	DATE

REVISIONS

NO	DATE	DESCRIPTION	ORIG	CHKR	SUPV	APPR
A	6/30/09	PROGRESS DRAWINGS (ROLL PLOTS)	MHS	SJL	SJL	LFC
B	9/25/09	50% SUBMITTAL	MHS	SJL	SJL	LFC
C	11/30/09	PLOTTED PER GDOT'S TERMINATION FOR CONVENIENCE DIRECTION	MHS			

GTP Georgia Transportation Partners

SCALE IN FEET
0 50 100 200

NORTHWEST I-75/I-575 CORRIDOR

DEPARTMENT OF TRANSPORTATION
STATE OF GEORGIA

JBT J.B. TRIMBLE, INC.
2550 Heritage Court SE
Suite 250
Atlanta, Georgia 30339

I-75 / I-575 NORTHWEST CORRIDOR

TYPICAL SECTIONS

I-575 REVERSIBLE MANAGED LANES

DRAWING No. C5-01