Subject: I-75 PPI		
Comp by: DRB	Date: 10/26/09	Sheet Number:
Check by:	Job Number: 100010194	

BRIDGE #13 LEAPBRIDGE

GEOMETRY : MULTIPLE SPAN LENGTHS, COMPARE PIER-TO-PIER

- PRECAST LENGTH = C-C PIER - 0.833'
- BRG-BRG = C-C PIER - 2.00'
- PIER ℄ - PRECAST = 0.4167'
- RELEASE SPAN = PRECAST LENGTH
- 40'-0" CURB-CURB ; 43'-3" OUT-OUT ; 5@7.475' ; 2'-3" (LT) ; 3.625' (RT)
- 7.5" EFFECTIVE SLAB w/ 0.25" SACRIFICIAL

LOADS

- BARRIER = 0.410 klf ; FWS = 0.030 ksf
- SIP FORMS = (7.46' - 3.5') × 0.016 ksf = 0.064 klf → ½ TO FASCIA
- COPING : 2.5"/12 × 3.5' × 0.150 kcf = 0.109 klf
- DIAPHRAGMS : 5.66k (END) ; 4.53k (INT) → 2.83k & 2.26k FASCIA

RCPIER

- 12'×6' COLUMN, OFFSET 14.625' FROM LEFT
- PILES : 234k SERVICE ; 328k STRENGTH
- CAP 10'-0" @ COLUMN (PIER #10) ; 9'-0" @ COLUMN (PIER #11)

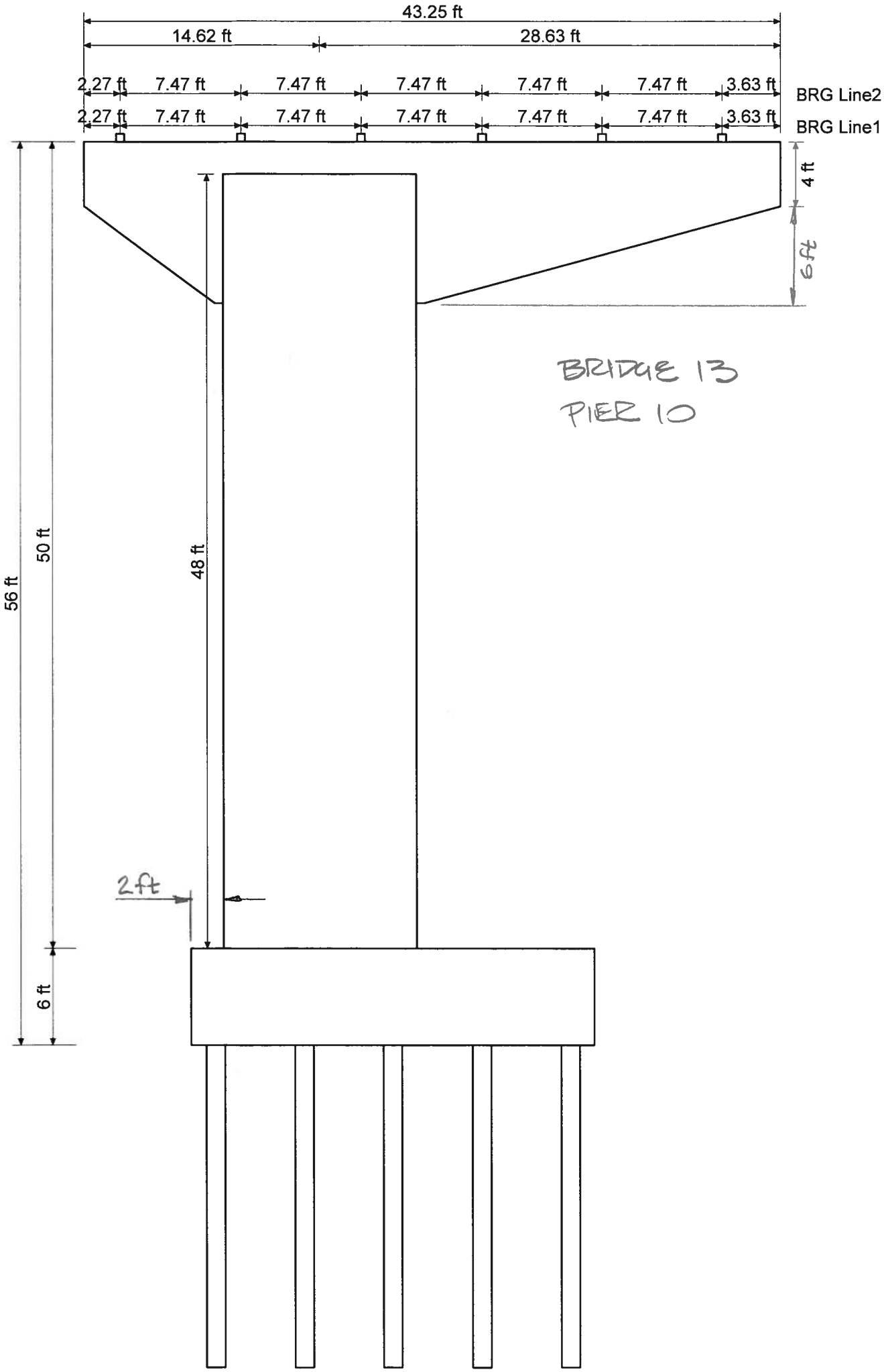
43.25 ft
14.62 ft
28.63 ft
2.27 ft
7.47 ft
7.47 ft
7.47 ft
7.47 ft
7.47 ft
3.63 ft
BRG Line2
2.27 ft
7.47 ft
7.47 ft
7.47 ft
7.47 ft
7.47 ft
3.63 ft
BRG Line1
4 ft
6 ft
BRIDGE 13
PIER 10
56 ft
50 ft
48 ft
2ft
6 ft

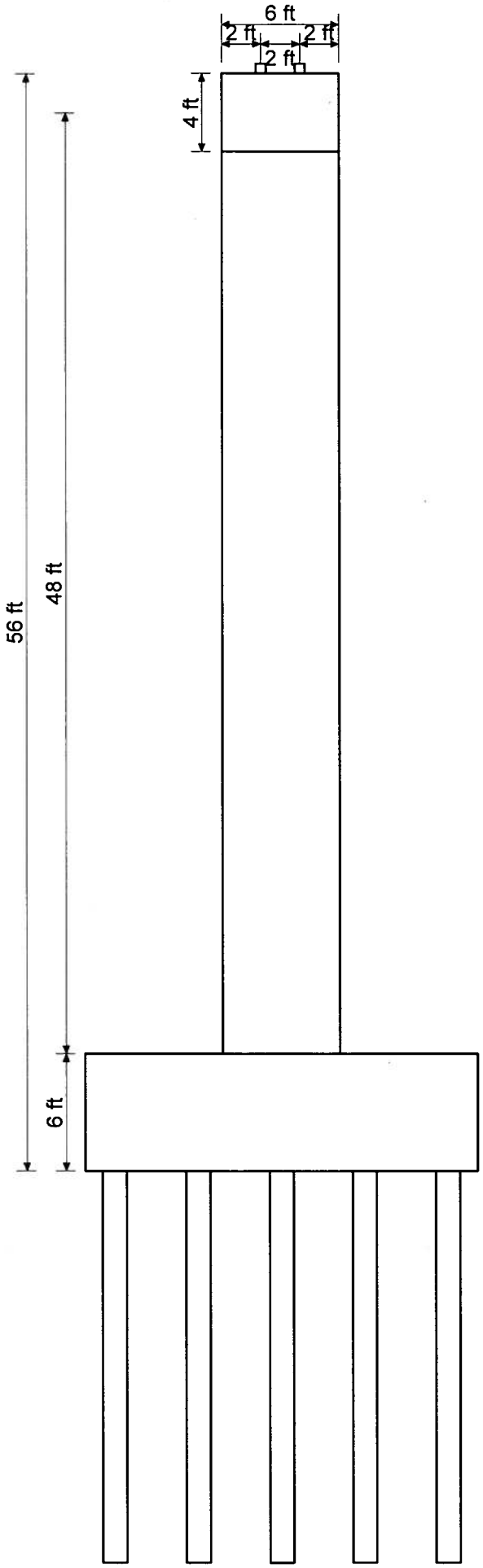
6 ft
2 ft
2 ft
2 ft
4 ft
56 ft
48 ft
6 ft

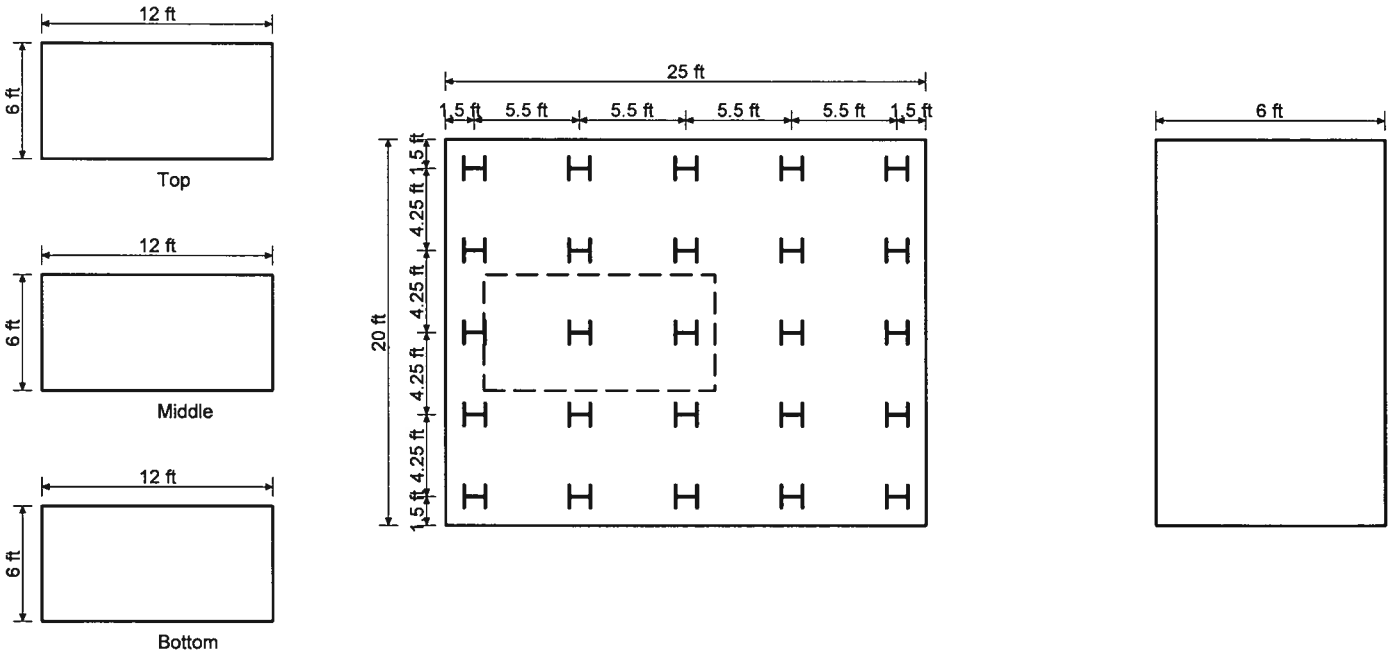
12 ft
6 ft
Top
12 ft
6 ft
Middle
12 ft
6 ft
Bottom
25 ft
1.5 ft
5.5 ft
5.5 ft
5.5 ft
5.5 ft
1.5 ft
20 ft
1.5 ft
4.25 ft
4.25 ft
4.25 ft
4.25 ft
1.5 ft
6 ft

PROJECT DATA

PROJECT DATA	
Project:	I-75 PPI Bridge 13
User Job No.:	100010194
Designer:	DRB
Date:	Oct/27/2009
Checker:	
Checked ate:	
State:	Georgia
State Job No.:	Bridge #13, Pier #10
Structure type:	Pier.
Pier View:	Upstation.
Code:	AASHTO STANDARD (17th Edition 2002)
Comments:	

PIER GEOMETRY

Pier Info:

Pier View: Upstation.
Pier Type: Multi Column

Cap Shape

Cap Shape: Variable
Top Elevations: start = 100.00 ft end = 100.00 ft
Depth(Z) = 72.00 in Skew angle = 0.00 Reduction of I = 1.000

Variable Cap Properties

Distance(X) ft	Height(Y) in
0.00	48.00
8.63	120.00
12.00	120.00
22.63	48.00

Column Shape : Rectangular

Number of columns: 1

Column number 1

Location from the left edge of the cap(X): 14.62 ft
Elevations: bottom = 50.00 ft top = 98.00 ft Reduction of I = 1.000
Column Bottom is Fixed

Column Section Dimensions

Width(X) = 144.00 in Depth(Z) = 72.00 in

SUPERSTRUCTURE INFO

Superstructure info:

Total number of spans:	5
Span number rear to current pier:	1
Number of traffic lanes:	3
Barrier height :	36.00 in
Depth of slab :	8.00 in
Curb to curb distance: 0.000	40.000 ft

Beam info:

Height in	Section area in^2	Inertia (Ixx) in^4	Inertia (Iyy) in^4	Beam CG in
74.00	847.00	642972.75	43634.34	36.72

Span #	Span length ft	Bridge Width ft
1	134.000	43.250
2	146.000	43.250
3	100.000	43.250
4	143.000	43.250
5	140.000	43.250
		43.250

BEARING POINTS

Number of bearing lines: 2

First bearing line Eccentricity = 1.00 ft

Point	Distance ft
1	2.27
2	9.74
3	17.21
4	24.68
5	32.15
6	39.62

Second bearing line Eccentricity = -1.00 ft

Point	Distance ft
1	2.27
2	9.74
3	17.21
4	24.68
5	32.15
6	39.62

MATERIAL PROPERTIES

MATERIAL PROPERTIES

	Cap	Column	Footing
Concrete Type	normal	normal	normal
Concrete Strength (psi)	3500.00	3500.00	3500.00
Concrete Density (lb/ft3)	150.00	150.00	150.00
Concrete Modulus Ec (ksi)	3586.62	3586.62	3586.62
Steel Strength Fy (ksi)	60.00	60.00	60.00

DESIGN PARAMETERS

DESIGN PARAMETERS

AASHTO STANDARD Code

Strength Reduction factors for reinf. concrete

Flexure and tension	0.90
Shear and torsion (normal)	0.85
Shear and torsion (lightweight)	0.85
Axial compression (ties)	0.70
Axial compression (spiral)	0.75

Multi presence factors for live load

1 Lane	1.00
2 Lanes	1.00
3 Lanes	0.90
more than 3 Lanes	0.75

	Crack control factor kip/ft	Clear cover in	Clear side cover in	Impact factors (auto calculation)
Cap	170.00	2.00	3.00	1.19
Column	170.00	2.00		1.19
Footing	130.00	3.00	3.00	1.00

Degree of fixity in foundations for Moment Magnify Method: Ga = 5.00

SEISMIC DESIGN PARAMETERS

Strength Reduction factors for reinf. Concrete Seismic Design

Flexure and tension	0.90
Shear and torsion (normal)	0.85
Shear and torsion (lightweight)	0.85
Axial compression (ties)	0.70
Axial compression (spiral)	0.75

Seismic Overstrength

Flexure and tension	1.30
Axial compression (ties)	1.30
Axial compression (spiral)	1.30

Response Modification Factor 3.00

Use core area for plastic hinging calculations.

Design Factors

Cap Design Factor	1.20
Footing Design Factor	1.20

Plastic Hinge Moment

Use actual computed Plastic Hinging Moment for each column in all combinations.

LOADS

Pier Info:

Pier View: Upstation.

Load Cases: 49

Loadcase ID: D1 Name:

Multiplier = 1.000

Bearing loads

Line #	Bearing #	Dir	Load kips
1	1	Y	-148.75
1	2	Y	-151.87
1	3	Y	-151.87
1	4	Y	-151.87
1	5	Y	-151.87
1	6	Y	-138.85
2	1	Y	-136.36
2	2	Y	-139.21
2	3	Y	-139.21
2	4	Y	-139.21
2	5	Y	-139.21
2	6	Y	-127.28

Auto generation details:

Generated Dead Load

Imported dead load reaction from Conspan for Pier: 1

Loadcase ID: (L+In)1 Name:

Multiplier = 1.000

Bearing loads

Line #	Bearing #	Dir	Load kips
1	1	Y	-39.33
1	2	Y	-37.22
1	3	Y	-43.66
1	4	Y	-35.14
1	5	Y	-38.20
1	6	Y	-2.80
2	1	Y	-23.19
2	2	Y	-21.94
2	3	Y	-25.75
2	4	Y	-20.72
2	5	Y	-22.52
2	6	Y	-1.65

Auto generation details:

Generated Live Load

Longitudinal Reaction: Simple Span Distribution

Selected Vehicles:

- HS20 truck
- H20/HS20 Lane Load
- Military

Transverse Positioning

Number of loaded lanes = all combinations
Live Load Positions = Variable Spacing
Minimum Spacing Between Positions = 1.00 ft

Generate Braking/Longitudinal Force = Selected
Generate Centrifugal Force = Selected

Total number of Considered Truck Positions = 13
Total number of Possible Combination = 174

Loadcase ID: (L+In)2 Name:

Multiplier = 1.000

Copyright © Bentley Systems, Inc. 1984 - 2009.

Bearing loads

Line #	Bearing #	Dir	Load kips
1	1	Y	-7.21
1	2	Y	-29.78
1	3	Y	-31.41
1	4	Y	-31.41
1	5	Y	-24.54
1	6	Y	-1.80
2	1	Y	-10.62
2	2	Y	-43.90
2	3	Y	-46.31
2	4	Y	-46.31
2	5	Y	-36.18
2	6	Y	-2.66

Auto generation details:

Generated Live Load

Longitudinal Reaction: Simple Span Distribution

Selected Vehicles:

- HS20 truck
- H20/HS20 Lane Load
- Military

Transverse Positioning

Number of loaded lanes = all combinations
Live Load Positions = Variable Spacing
Minimum Spacing Between Positions = 1.00 ft

Generate Braking/Longitudinal Force = Selected
Generate Centrifugal Force = Selected

Total number of Considered Truck Positions = 13
Total number of Possible Combination = 174

Loadcase ID: (L+In)3 Name:

Multiplier = 1.000

Copyright © Bentley Systems, Inc. 1984 - 2009.

Bearing loads

Line #	Bearing #	Dir	Load kips
1	1	Y	0.00
1	2	Y	0.00
1	3	Y	0.00
1	4	Y	-3.12
1	5	Y	-42.44
1	6	Y	-27.16
2	1	Y	0.00
2	2	Y	0.00
2	3	Y	0.00
2	4	Y	-1.84
2	5	Y	-25.03
2	6	Y	-16.02

Auto generation details:

Generated Live Load

Longitudinal Reaction: Simple Span Distribution

Selected Vehicles:	
	HS20 truck
	H20/HS20 Lane Load
	Military

Transverse Positioning

Number of loaded lanes = all combinations
Live Load Positions = Variable Spacing
Minimum Spacing Between Positions = 1.00 ft

Generate Braking/Longitudinal Force = Selected
Generate Centrifugal Force = Selected

Total number of Considered Truck Positions = 13
Total number of Possible Combination = 174

Loadcase ID: (L+In)4 Name:

Multiplier = 1.000

Bearing loads

Line #	Bearing #	Dir	Load kips
1	1	Y	-43.70
1	2	Y	-41.35
1	3	Y	-48.51
1	4	Y	-11.88
1	5	Y	0.00
1	6	Y	0.00
2	1	Y	-25.77
2	2	Y	-24.38
2	3	Y	-28.61
2	4	Y	-7.00
2	5	Y	0.00
2	6	Y	0.00

Auto generation details:

Generated Live Load

Longitudinal Reaction: Simple Span Distribution

Selected Vehicles:	
	HS20 truck
	H20/HS20 Lane Load
	Military

Transverse Positioning

Number of loaded lanes = all combinations
Live Load Positions = Variable Spacing
Minimum Spacing Between Positions = 1.00 ft

Generate Braking/Longitudinal Force = Selected
Generate Centrifugal Force = Selected

Total number of Considered Truck Positions = 13
Total number of Possible Combination = 174

Loadcase ID: (L+In)5 Name:

Multiplier = 1.000

Bearing loads

Line #	Bearing #	Dir	Load kips
1	1	Y	-28.07
1	2	Y	-18.56
1	3	Y	-0.09
1	4	Y	0.00
1	5	Y	0.00
1	6	Y	0.00
2	1	Y	-41.39
2	2	Y	-27.36
2	3	Y	-0.13
2	4	Y	0.00
2	5	Y	0.00
2	6	Y	0.00

Auto generation details:

Generated Live Load

Longitudinal Reaction: Simple Span Distribution

Selected Vehicles:
HS20 truck
H20/HS20 Lane Load
Military

Transverse Positioning

Number of loaded lanes = all combinations
Live Load Positions = Variable Spacing
Minimum Spacing Between Positions = 1.00 ft

Generate Braking/Longitudinal Force = Selected
Generate Centrifugal Force = Selected

Total number of Considered Truck Positions = 13
Total number of Possible Combination = 174

Loadcase ID: (L+In)6 Name:

Multiplier = 1.000

Copyright © Bentley Systems, Inc. 1984 - 2009.

Bearing loads

Line #	Bearing #	Dir	Load kips
1	1	Y	-43.70
1	2	Y	-28.89
1	3	Y	-0.13
1	4	Y	0.00
1	5	Y	0.00
1	6	Y	0.00
2	1	Y	-25.77
2	2	Y	-17.03
2	3	Y	-0.08
2	4	Y	0.00
2	5	Y	0.00
2	6	Y	0.00

Auto generation details:

Generated Live Load

Longitudinal Reaction: Simple Span Distribution

Selected Vehicles:

- HS20 truck
- H20/HS20 Lane Load
- Military

Transverse Positioning

Number of loaded lanes = all combinations
Live Load Positions = Variable Spacing
Minimum Spacing Between Positions = 1.00 ft

Generate Braking/Longitudinal Force = Selected
Generate Centrifugal Force = Selected

Total number of Considered Truck Positions = 13
Total number of Possible Combination = 174

Loadcase ID: (L+In)7 Name:

Multiplier = 1.000

Copyright © Bentley Systems, Inc. 1984 - 2009.

Bearing loads

Line #	Bearing #	Dir	Load kips
1	1	Y	-28.07
1	2	Y	-26.57
1	3	Y	-31.17
1	4	Y	-7.63
1	5	Y	0.00
1	6	Y	0.00
2	1	Y	-41.39
2	2	Y	-39.17
2	3	Y	-45.95
2	4	Y	-11.25
2	5	Y	0.00
2	6	Y	0.00

Auto generation details:

Generated Live Load

Longitudinal Reaction: Simple Span Distribution

Selected Vehicles:	
	HS20 truck
	H20/HS20 Lane Load
	Military

Transverse Positioning

Number of loaded lanes = all combinations
Live Load Positions = Variable Spacing
Minimum Spacing Between Positions = 1.00 ft

Generate Braking/Longitudinal Force = Selected
Generate Centrifugal Force = Selected

Total number of Considered Truck Positions = 13
Total number of Possible Combination = 174

Loadcase ID: (L+In)8 Name:

Multiplier = 1.000

Bearing loads

Line #	Bearing #	Dir	Load kips
1	1	Y	-25.27
1	2	Y	-23.91
1	3	Y	-29.85
1	4	Y	-31.41
1	5	Y	-15.70
1	6	Y	0.00
2	1	Y	-37.25
2	2	Y	-35.25
2	3	Y	-44.01
2	4	Y	-46.31
2	5	Y	-23.15
2	6	Y	0.00

Auto generation details:

Generated Live Load

Longitudinal Reaction: Simple Span Distribution

Selected Vehicles:	
	HS20 truck
	H20/HS20 Lane Load
	Military

Transverse Positioning

Number of loaded lanes = all combinations
Live Load Positions = Variable Spacing
Minimum Spacing Between Positions = 1.00 ft

Generate Braking/Longitudinal Force = Selected
Generate Centrifugal Force = Selected

Total number of Considered Truck Positions = 13
Total number of Possible Combination = 174

Loadcase ID: (L+In)9 Name:

Multiplier = 1.000

Copyright © Bentley Systems, Inc. 1984 - 2009.

Bearing loads

Line #	Bearing #	Dir	Load kips
1	1	Y	-39.33
1	2	Y	-37.22
1	3	Y	-46.47
1	4	Y	-48.89
1	5	Y	-24.44
1	6	Y	0.00
2	1	Y	-23.19
2	2	Y	-21.94
2	3	Y	-27.40
2	4	Y	-28.83
2	5	Y	-14.41
2	6	Y	0.00

Auto generation details:

Generated Live Load

Longitudinal Reaction: Simple Span Distribution

Selected Vehicles:

- HS20 truck
- H20/HS20 Lane Load
- Military

Transverse Positioning

Number of loaded lanes = all combinations
Live Load Positions = Variable Spacing
Minimum Spacing Between Positions = 1.00 ft

Generate Braking/Longitudinal Force = Selected
Generate Centrifugal Force = Selected

Total number of Considered Truck Positions = 13
Total number of Possible Combination = 174

Loadcase ID: (L+In)10 Name:

Multiplier = 1.000

Bearing loads

Line #	Bearing #	Dir	Load kips
1	1	Y	0.00
1	2	Y	0.00
1	3	Y	-12.46
1	4	Y	-51.49
1	5	Y	-54.32
1	6	Y	-27.16
2	1	Y	0.00
2	2	Y	0.00
2	3	Y	-7.35
2	4	Y	-30.36
2	5	Y	-32.03
2	6	Y	-16.02

Auto generation details:

Generated Live Load

Longitudinal Reaction: Simple Span Distribution

Selected Vehicles:
HS20 truck
H20/HS20 Lane Load
Military

Transverse Positioning

Number of loaded lanes = all combinations
Live Load Positions = Variable Spacing
Minimum Spacing Between Positions = 1.00 ft

Generate Braking/Longitudinal Force = Selected
Generate Centrifugal Force = Selected

Total number of Considered Truck Positions = 13
Total number of Possible Combination = 174

Loadcase ID: (L+In)11 Name:

Multiplier = 1.000

Copyright © Bentley Systems, Inc. 1984 - 2009.

Bearing loads

Line #	Bearing #	Dir	Load kips
1	1	Y	0.00
1	2	Y	0.00
1	3	Y	-8.01
1	4	Y	-33.08
1	5	Y	-34.90
1	6	Y	-17.45
2	1	Y	0.00
2	2	Y	0.00
2	3	Y	-11.80
2	4	Y	-48.78
2	5	Y	-51.45
2	6	Y	-25.73

Auto generation details:

Generated Live Load

Longitudinal Reaction: Simple Span Distribution

Selected Vehicles:

- HS20 truck
- H20/HS20 Lane Load
- Military

Transverse Positioning

Number of loaded lanes = all combinations
Live Load Positions = Variable Spacing
Minimum Spacing Between Positions = 1.00 ft

Generate Braking/Longitudinal Force = Selected
Generate Centrifugal Force = Selected

Total number of Considered Truck Positions = 13
Total number of Possible Combination = 174

Loadcase ID: (L+In)12 Name:

Multiplier = 1.000

Bearing loads

Line #	Bearing #	Dir	Load kips
1	1	Y	0.00
1	2	Y	0.00
1	3	Y	0.00
1	4	Y	-2.00
1	5	Y	-27.27
1	6	Y	-17.45
2	1	Y	0.00
2	2	Y	0.00
2	3	Y	0.00
2	4	Y	-2.95
2	5	Y	-40.20
2	6	Y	-25.73

Auto generation details:

Generated Live Load

Longitudinal Reaction: Simple Span Distribution

Selected Vehicles:

- HS20 truck
- H20/HS20 Lane Load
- Military

Transverse Positioning

Number of loaded lanes = all combinations
Live Load Positions = Variable Spacing
Minimum Spacing Between Positions = 1.00 ft

Generate Braking/Longitudinal Force = Selected
Generate Centrifugal Force = Selected

Total number of Considered Truck Positions = 13
Total number of Possible Combination = 174

Loadcase ID: LF1 Name:

Multiplier = 1.000

Cap loads

Type	Dir	Arm ft	Mag1	x1/L	Mag2	x2/L
Moment	X		-186.42 k-ft	0.50		

Bearing loads

Line #	Bearing #	Dir	Load kips
1	1	Z	-1.21
1	2	Z	-1.21
1	3	Z	-1.21
1	4	Z	-1.21
1	5	Z	-1.21
1	6	Z	-1.21
2	1	Z	-1.21
2	2	Z	-1.21
2	3	Z	-1.21
2	4	Z	-1.21
2	5	Z	-1.21
2	6	Z	-1.21

Auto generation details:

Selected Live Load for LF generation

Load: H20/HS20 Lane Load

Number of loaded lanes = 3

Contributing longitudinal length = 140.00 ft

Loadcase ID: LF2 Name:

Multiplier = 1.000

Cap loads

Type	Dir	Arm ft	Mag1	x1/L	Mag2	x2/L
Moment	X		-186.42 k-ft	0.50		

Bearing loads

Line #	Bearing #	Dir	Load kips
1	1	Z	-1.21
1	2	Z	-1.21
1	3	Z	-1.21
1	4	Z	-1.21
1	5	Z	-1.21
1	6	Z	-1.21
2	1	Z	-1.21
2	2	Z	-1.21
2	3	Z	-1.21
2	4	Z	-1.21
2	5	Z	-1.21
2	6	Z	-1.21

Auto generation details:

Selected Live Load for LF generation

Load: H20/HS20 Lane Load
Number of loaded lanes = 3
Contributing longitudinal length = 140.00 ft

Loadcase ID: LF3 Name:

Multiplier = 1.000

Cap loads

Type	Dir	Arm ft	Mag1	x1/L	Mag2	x2/L
Moment	X		-69.04 k-ft	0.50		

Bearing loads

Line #	Bearing #	Dir	Load kips
1	1	Z	-0.45
1	2	Z	-0.45
1	3	Z	-0.45
1	4	Z	-0.45
1	5	Z	-0.45
1	6	Z	-0.45
2	1	Z	-0.45
2	2	Z	-0.45
2	3	Z	-0.45
2	4	Z	-0.45

Line #	Bearing #	Dir	Load kips
2	5	Z	-0.45
2	6	Z	-0.45

Auto generation details:

Selected Live Load for LF generation

Load: H20/HS20 Lane Load
Number of loaded lanes = 1
Contributing longitudinal length = 140.00 ft

Loadcase ID: LF4 Name:

Multiplier = 1.000

Cap loads

Type	Dir	Arm ft	Mag1	x1/L	Mag2	x2/L
Moment	X		-138.09 k-ft	0.50		

Bearing loads

Line #	Bearing #	Dir	Load kips
1	1	Z	-0.90
1	2	Z	-0.90
1	3	Z	-0.90
1	4	Z	-0.90
1	5	Z	-0.90
1	6	Z	-0.90
2	1	Z	-0.90
2	2	Z	-0.90
2	3	Z	-0.90
2	4	Z	-0.90
2	5	Z	-0.90
2	6	Z	-0.90

Auto generation details:

Selected Live Load for LF generation

Load: H20/HS20 Lane Load
Number of loaded lanes = 2
Contributing longitudinal length = 140.00 ft

Loadcase ID: LF5 Name:

Multiplier = 1.000

Cap loads

Type	Dir	Arm ft	Mag1	x1/L	Mag2	x2/L
Moment	X		-69.04 k-ft	0.50		

Bearing loads

Line #	Bearing #	Dir	Load kips
1	1	Z	-0.45
1	2	Z	-0.45
1	3	Z	-0.45
1	4	Z	-0.45
1	5	Z	-0.45
1	6	Z	-0.45
2	1	Z	-0.45
2	2	Z	-0.45
2	3	Z	-0.45
2	4	Z	-0.45
2	5	Z	-0.45
2	6	Z	-0.45

Auto generation details:

Selected Live Load for LF generation

Load: H20/HS20 Lane Load
Number of loaded lanes = 1
Contributing longitudinal length = 140.00 ft

Loadcase ID: LF6 Name:

Multiplier = 1.000

Cap loads

Type	Dir	Arm ft	Mag1	x1/L	Mag2	x2/L
Moment	X		-69.04 k-ft	0.50		

Bearing loads

Line #	Bearing #	Dir	Load kips
1	1	Z	-0.45
1	2	Z	-0.45
1	3	Z	-0.45
1	4	Z	-0.45
1	5	Z	-0.45
1	6	Z	-0.45
2	1	Z	-0.45
2	2	Z	-0.45
2	3	Z	-0.45
2	4	Z	-0.45
2	5	Z	-0.45
2	6	Z	-0.45

Auto generation details:

Selected Live Load for LF generation

Load: H20/HS20 Lane Load

Number of loaded lanes = 1

Contributing longitudinal length = 140.00 ft

Loadcase ID: LF7 Name:

Multiplier = 1.000

Cap loads

Type	Dir	Arm ft	Mag1	x1/L	Mag2	x2/L
Moment	X		-138.09 k-ft	0.50		

Bearing loads

Line #	Bearing #	Dir	Load kips
1	1	Z	-0.90
1	2	Z	-0.90
1	3	Z	-0.90
1	4	Z	-0.90
1	5	Z	-0.90
1	6	Z	-0.90
2	1	Z	-0.90
2	2	Z	-0.90
2	3	Z	-0.90
2	4	Z	-0.90
2	5	Z	-0.90
2	6	Z	-0.90

Auto generation details:

Selected Live Load for LF generation

Load: H20/HS20 Lane Load
Number of loaded lanes = 2
Contributing longitudinal length = 140.00 ft

Loadcase ID: LF8 Name:

Multiplier = 1.000

Cap loads

Type	Dir	Arm ft	Mag1	x1/L	Mag2	x2/L
Moment	X		-186.42 k-ft	0.50		

Bearing loads

Line #	Bearing #	Dir	Load kips
1	1	Z	-1.21
1	2	Z	-1.21
1	3	Z	-1.21
1	4	Z	-1.21
1	5	Z	-1.21
1	6	Z	-1.21
2	1	Z	-1.21
2	2	Z	-1.21
2	3	Z	-1.21
2	4	Z	-1.21

Line #	Bearing #	Dir	Load kips
2	5	Z	-1.21
2	6	Z	-1.21

Auto generation details:

Selected Live Load for LF generation

Load: H20/HS20 Lane Load
Number of loaded lanes = 3
Contributing longitudinal length = 140.00 ft

Loadcase ID: LF9 Name:

Multiplier = 1.000

Cap loads

Type	Dir	Arm ft	Mag1	x1/L	Mag2	x2/L
Moment	X		-186.42 k-ft	0.50		

Bearing loads

Line #	Bearing #	Dir	Load kips
1	1	Z	-1.21
1	2	Z	-1.21
1	3	Z	-1.21
1	4	Z	-1.21
1	5	Z	-1.21
1	6	Z	-1.21
2	1	Z	-1.21
2	2	Z	-1.21
2	3	Z	-1.21
2	4	Z	-1.21
2	5	Z	-1.21
2	6	Z	-1.21

Auto generation details:

Selected Live Load for LF generation

Load: H20/HS20 Lane Load
Number of loaded lanes = 3
Contributing longitudinal length = 140.00 ft

Loadcase ID: LF10 Name:

Multiplier = 1.000

Cap loads

Type	Dir	Arm ft	Mag1	x1/L	Mag2	x2/L
Moment	X		-138.09 k-ft	0.50		

Bearing loads

Line #	Bearing #	Dir	Load kips
1	1	Z	-0.90
1	2	Z	-0.90
1	3	Z	-0.90
1	4	Z	-0.90
1	5	Z	-0.90
1	6	Z	-0.90
2	1	Z	-0.90
2	2	Z	-0.90
2	3	Z	-0.90
2	4	Z	-0.90
2	5	Z	-0.90
2	6	Z	-0.90

Auto generation details:

Selected Live Load for LF generation

Load: H20/HS20 Lane Load
Number of loaded lanes = 2
Contributing longitudinal length = 140.00 ft

Loadcase ID: LF11 Name:

Multiplier = 1.000

Cap loads

Type	Dir	Arm ft	Mag1	x1/L	Mag2	x2/L
Moment	X		-138.09 k-ft	0.50		

Bearing loads

Line #	Bearing #	Dir	Load kips
1	1	Z	-0.90
1	2	Z	-0.90
1	3	Z	-0.90
1	4	Z	-0.90
1	5	Z	-0.90
1	6	Z	-0.90
2	1	Z	-0.90
2	2	Z	-0.90
2	3	Z	-0.90
2	4	Z	-0.90
2	5	Z	-0.90
2	6	Z	-0.90

Auto generation details:

Selected Live Load for LF generation

Load: H20/HS20 Lane Load

Number of loaded lanes = 2

Contributing longitudinal length = 140.00 ft

Loadcase ID: LF12 Name:

Multiplier = 1.000

Cap loads

Type	Dir	Arm ft	Mag1	x1/L	Mag2	x2/L
Moment	X		-69.04 k-ft	0.50		

Bearing loads

Line #	Bearing #	Dir	Load kips
1	1	Z	-0.45
1	2	Z	-0.45
1	3	Z	-0.45
1	4	Z	-0.45
1	5	Z	-0.45
1	6	Z	-0.45
2	1	Z	-0.45
2	2	Z	-0.45
2	3	Z	-0.45
2	4	Z	-0.45
2	5	Z	-0.45
2	6	Z	-0.45

Auto generation details:

Selected Live Load for LF generation
Load: H20/HS20 Lane Load
Number of loaded lanes = 1
Contributing longitudinal length = 140.00 ft

Loadcase ID: CF1 Name:
Multiplier = 1.000

Bearing loads

Line #	Bearing #	Dir	Load kips
1	1	X	-1.39
1	1	Y	-2.87
1	2	X	-1.39
1	3	X	-1.39
1	4	X	-1.39
1	5	X	-1.39
1	6	X	-1.39
1	6	Y	2.87
2	1	X	-1.39
2	1	Y	-2.87
2	2	X	-1.39
2	3	X	-1.39
2	4	X	-1.39
2	5	X	-1.39
2	6	X	-1.39
2	6	Y	2.87

Auto generation details:

Selected Live Load for CF generation

Load: HS20 truck
Load: Military
Number of loaded lanes = 3
Radius of curve = 3286.00 ft
Design speed = 65.00 mph

Loadcase ID: CF2 Name:

Multiplier = 1.000

Bearing loads

Line #	Bearing #	Dir	Load kips
1	1	X	-1.39
1	1	Y	-2.87
1	2	X	-1.39
1	3	X	-1.39
1	4	X	-1.39
1	5	X	-1.39
1	6	X	-1.39
1	6	Y	2.87
2	1	X	-1.39
2	1	Y	-2.87
2	2	X	-1.39
2	3	X	-1.39
2	4	X	-1.39
2	5	X	-1.39
2	6	X	-1.39
2	6	Y	2.87

Auto generation details:

Selected Live Load for CF generation

Load: HS20 truck
Load: Military
Number of loaded lanes = 3
Radius of curve = 3286.00 ft

Design speed = 65.00 mph

Loadcase ID: CF3 Name:

Multiplier = 1.000

Bearing loads

Line #	Bearing #	Dir	Load kips
1	1	X	-0.52
1	1	Y	-1.06
1	2	X	-0.52
1	3	X	-0.52
1	4	X	-0.52
1	5	X	-0.52
1	6	X	-0.52
1	6	Y	1.06
2	1	X	-0.52
2	1	Y	-1.06
2	2	X	-0.52
2	3	X	-0.52
2	4	X	-0.52
2	5	X	-0.52
2	6	X	-0.52
2	6	Y	1.06

Auto generation details:

Selected Live Load for CF generation

Load: HS20 truck
Load: Military
Number of loaded lanes = 1
Radius of curve = 3286.00 ft
Design speed = 65.00 mph

Loadcase ID: CF4 Name:

Multiplier = 1.000

Bearing loads

Line #	Bearing #	Dir	Load kips
1	1	X	-1.03
1	1	Y	-2.12
1	2	X	-1.03
1	3	X	-1.03
1	4	X	-1.03
1	5	X	-1.03
1	6	X	-1.03
1	6	Y	2.12
2	1	X	-1.03
2	1	Y	-2.12
2	2	X	-1.03
2	3	X	-1.03
2	4	X	-1.03
2	5	X	-1.03
2	6	X	-1.03
2	6	Y	2.12

Auto generation details:

Selected Live Load for CF generation

Load: HS20 truck
Load: Military
Number of loaded lanes = 2
Radius of curve = 3286.00 ft
Design speed = 65.00 mph

Loadcase ID: CF5 Name:

Multiplier = 1.000

Bearing loads

Line #	Bearing #	Dir	Load kips
1	1	X	-0.52
1	1	Y	-1.06
1	2	X	-0.52
1	3	X	-0.52
1	4	X	-0.52

Line #	Bearing #	Dir	Load kips
1	5	X	-0.52
1	6	X	-0.52
1	6	Y	1.06
2	1	X	-0.52
2	1	Y	-1.06
2	2	X	-0.52
2	3	X	-0.52
2	4	X	-0.52
2	5	X	-0.52
2	6	X	-0.52
2	6	Y	1.06

Auto generation details:

Selected Live Load for CF generation
Load: HS20 truck
Load: Military
Number of loaded lanes = 1
Radius of curve = 3286.00 ft
Design speed = 65.00 mph

Loadcase ID: CF6 Name:
Multiplier = 1.000

Bearing loads

Line #	Bearing #	Dir	Load kips
1	1	X	-0.52
1	1	Y	-1.06
1	2	X	-0.52
1	3	X	-0.52
1	4	X	-0.52
1	5	X	-0.52
1	6	X	-0.52
1	6	Y	1.06
2	1	X	-0.52
2	1	Y	-1.06
2	2	X	-0.52
2	3	X	-0.52
2	4	X	-0.52
2	5	X	-0.52
2	6	X	-0.52

Line #	Bearing #	Dir	Load kips
2	6	Y	1.06

Auto generation details:

Selected Live Load for CF generation

Load: HS20 truck
Load: Military
Number of loaded lanes = 1
Radius of curve = 3286.00 ft
Design speed = 65.00 mph

Loadcase ID: CF7 Name:

Multiplier = 1.000

Bearing loads

Line #	Bearing #	Dir	Load kips
1	1	X	-1.03
1	1	Y	-2.12
1	2	X	-1.03
1	3	X	-1.03
1	4	X	-1.03
1	5	X	-1.03
1	6	X	-1.03
1	6	Y	2.12
2	1	X	-1.03
2	1	Y	-2.12
2	2	X	-1.03
2	3	X	-1.03
2	4	X	-1.03
2	5	X	-1.03
2	6	X	-1.03
2	6	Y	2.12

Auto generation details:

Selected Live Load for CF generation

Load: HS20 truck
Load: Military
Number of loaded lanes = 2
Radius of curve = 3286.00 ft
Design speed = 65.00 mph

Loadcase ID: CF8 Name:

Multiplier = 1.000

Bearing loads

Line #	Bearing #	Dir	Load kips
1	1	X	-1.39
1	1	Y	-2.87
1	2	X	-1.39
1	3	X	-1.39
1	4	X	-1.39
1	5	X	-1.39
1	6	X	-1.39
1	6	Y	2.87
2	1	X	-1.39
2	1	Y	-2.87
2	2	X	-1.39
2	3	X	-1.39
2	4	X	-1.39
2	5	X	-1.39
2	6	X	-1.39
2	6	Y	2.87

Auto generation details:

Selected Live Load for CF generation

Load: HS20 truck
Load: Military
Number of loaded lanes = 3
Radius of curve = 3286.00 ft
Design speed = 65.00 mph

Loadcase ID: CF9 Name:

Multiplier = 1.000

Bearing loads

Line #	Bearing #	Dir	Load kips
1	1	X	-1.39
1	1	Y	-2.87
1	2	X	-1.39
1	3	X	-1.39
1	4	X	-1.39
1	5	X	-1.39
1	6	X	-1.39
1	6	Y	2.87
2	1	X	-1.39
2	1	Y	-2.87
2	2	X	-1.39
2	3	X	-1.39
2	4	X	-1.39
2	5	X	-1.39
2	6	X	-1.39
2	6	Y	2.87

Auto generation details:

Selected Live Load for CF generation

Load: HS20 truck
Load: Military
Number of loaded lanes = 3
Radius of curve = 3286.00 ft
Design speed = 65.00 mph

Loadcase ID: CF10 Name:

Multiplier = 1.000

Bearing loads

Line #	Bearing #	Dir	Load kips
1	1	X	-1.03
1	1	Y	-2.12
1	2	X	-1.03

Line #	Bearing #	Dir	Load kips
1	3	X	-1.03
1	4	X	-1.03
1	5	X	-1.03
1	6	X	-1.03
1	6	Y	2.12
2	1	X	-1.03
2	1	Y	-2.12
2	2	X	-1.03
2	3	X	-1.03
2	4	X	-1.03
2	5	X	-1.03
2	6	X	-1.03
2	6	Y	2.12

Auto generation details:

Selected Live Load for CF generation

Load: HS20 truck
Load: Military
Number of loaded lanes = 2
Radius of curve = 3286.00 ft
Design speed = 65.00 mph

Loadcase ID: CF11 Name:

Multiplier = 1.000

Bearing loads

Line #	Bearing #	Dir	Load kips
1	1	X	-1.03
1	1	Y	-2.12
1	2	X	-1.03
1	3	X	-1.03
1	4	X	-1.03
1	5	X	-1.03
1	6	X	-1.03
1	6	Y	2.12
2	1	X	-1.03
2	1	Y	-2.12
2	2	X	-1.03
2	3	X	-1.03
2	4	X	-1.03

Line #	Bearing #	Dir	Load kips
2	5	X	-1.03
2	6	X	-1.03
2	6	Y	2.12

Auto generation details:

Selected Live Load for CF generation

Load: HS20 truck
Load: Military
Number of loaded lanes = 2
Radius of curve = 3286.00 ft
Design speed = 65.00 mph

Loadcase ID: CF12 Name:

Multiplier = 1.000

Bearing loads

Line #	Bearing #	Dir	Load kips
1	1	X	-0.52
1	1	Y	-1.06
1	2	X	-0.52
1	3	X	-0.52
1	4	X	-0.52
1	5	X	-0.52
1	6	X	-0.52
1	6	Y	1.06
2	1	X	-0.52
2	1	Y	-1.06
2	2	X	-0.52
2	3	X	-0.52
2	4	X	-0.52
2	5	X	-0.52
2	6	X	-0.52
2	6	Y	1.06

Auto generation details:

Selected Live Load for CF generation

Load: HS20 truck
Load: Military
Number of loaded lanes = 1
Radius of curve = 3286.00 ft
Design speed = 65.00 mph

Loadcase ID: W1 Name: Angle: 0

Multiplier = 1.000

Cap loads

Type	Dir	Arm ft	Mag1	x1/L	Mag2	x2/L
Force	X	0.00	1.92 kips	0.50		

Column loads

Col #	Type	Dir	Mag1	y1/L	Mag2	y2/L
1	UDL	X	0.240 klf	0.21		0.88

Bearing loads

Line #	Bearing #	Dir	Load kips
1	1	X	5.98
1	1	Y	33.53
1	1	Z	-0.00
1	2	X	5.98
1	2	Y	10.52
1	2	Z	-0.00
1	3	X	5.98
1	3	Y	10.52
1	3	Z	-0.00
1	4	X	5.98
1	4	Y	10.52
1	4	Z	-0.00
1	5	X	5.98
1	5	Y	10.52
1	5	Z	-0.00
1	6	X	5.98
1	6	Y	-12.48
1	6	Z	-0.00
2	1	X	5.49
2	1	Y	30.77
2	1	Z	-0.00
2	2	X	5.49
2	2	Y	9.66
2	2	Z	-0.00

Line #	Bearing #	Dir	Load kips
2	3	X	5.49
2	3	Y	9.66
2	3	Z	-0.00
2	4	X	5.49
2	4	Y	9.66
2	4	Z	-0.00
2	5	X	5.49
2	5	Y	9.66
2	5	Z	-0.00
2	6	X	5.49
2	6	Y	-11.45
2	6	Z	-0.00

Auto generation details:

Generated Wind Load on Structure

Angle of wind = 0.00 deg Elevation above which wind load acts = 60.00 ft

Default wind pressure:

Wind pressure for superstructure:	Wind pressure for substructure:
Transverse 50.000 psf	Cap 40.000 psf
Longitudinal 0.000 psf	Column 40.000 psf
Overturning 20.000 psf	

Loadcase ID: W2 Name: Angle: 15

Multiplier = 1.000

Cap loads

Type	Dir	Arm ft	Mag1	x1/L	Mag2	x2/L
Force	X	0.00	-4.71 kips	0.50		
UDL	Z		0.03 klf	0.00		1.00

Column loads

Col #	Type	Dir	Mag1	y1/L	Mag2	y2/L
1	UDL	X	-0.344 klf	0.21		0.88
1	UDL	Z	0.092 klf	0.21		0.88

Bearing loads

Line #	Bearing #	Dir	Load kips
1	1	X	-4.83
1	1	Y	-3.82
1	1	Z	0.66
1	2	X	-4.83
1	2	Y	-0.00
1	2	Z	0.66
1	3	X	-4.83
1	3	Y	-0.00
1	3	Z	0.66
1	4	X	-4.83
1	4	Y	-0.00
1	4	Z	0.66
1	5	X	-4.83
1	5	Y	-0.00
1	5	Z	0.66
1	6	X	-4.83
1	6	Y	3.82
1	6	Z	0.66
2	1	X	-5.26
2	1	Y	-4.16
2	1	Z	0.72
2	2	X	-5.26
2	2	Y	-0.00
2	2	Z	0.72
2	3	X	-5.26
2	3	Y	-0.00
2	3	Z	0.72
2	4	X	-5.26
2	4	Y	-0.00
2	4	Z	0.72
2	5	X	-5.26
2	5	Y	-0.00
2	5	Z	0.72
2	6	X	-5.26
2	6	Y	4.16
2	6	Z	0.72

Auto generation details:

Generated Wind Load on Structure
Angle of wind = 15.00 deg Elevation above which wind load acts = 60.00 ft
Default wind pressure:
Wind pressure for superstructure: Wind pressure for substructure:
Transverse 44.000 psf Cap 40.000 psf
Longitudinal 6.000 psf Column 40.000 psf
Overturning not considered

Loadcase ID: W3 Name: Angle: 30

Multiplier = 1.000

Cap loads

Type	Dir	Arm ft	Mag1	x1/L	Mag2	x2/L
Force	X	0.00	-6.49 kips	0.50		
UDL	Z		0.08 klf	0.00		1.00

Column loads

Col #	Type	Dir	Mag1	y1/L	Mag2	y2/L
1	UDL	X	-0.388 klf	0.21		0.88
1	UDL	Z	0.224 klf	0.21		0.88

Bearing loads

Line #	Bearing #	Dir	Load kips
1	1	X	-4.50
1	1	Y	-3.56
1	1	Z	1.32
1	2	X	-4.50
1	2	Y	-0.00
1	2	Z	1.32
1	3	X	-4.50
1	3	Y	-0.00
1	3	Z	1.32
1	4	X	-4.50
1	4	Y	-0.00
1	4	Z	1.32
1	5	X	-4.50
1	5	Y	-0.00
1	5	Z	1.32
1	6	X	-4.50
1	6	Y	3.56
1	6	Z	1.32
2	1	X	-4.91
2	1	Y	-3.87
2	1	Z	1.44
2	2	X	-4.91
2	2	Y	-0.00
2	2	Z	1.44
2	3	X	-4.91
2	3	Y	-0.00
2	3	Z	1.44
2	4	X	-4.91
2	4	Y	-0.00
2	4	Z	1.44
2	5	X	-4.91
2	5	Y	-0.00
2	5	Z	1.44

Line #	Bearing #	Dir	Load kips
2	6	X	-4.91
2	6	Y	3.87
2	6	Z	1.44

Auto generation details:

Generated Wind Load on Structure

Angle of wind = 30.00 deg Elevation above which wind load acts = 60.00 ft

Default wind pressure:

Wind pressure for superstructure: Wind pressure for substructure:

Transverse 41.000 psf Cap 40.000 psf

Longitudinal 12.000 psf Column 40.000 psf

Overturning not considered

Loadcase ID: W4 Name: Angle: 45

Multiplier = 1.000

Cap loads

Type	Dir	Arm ft	Mag1	x1/L	Mag2	x2/L
Force	X	0.00	-6.79 kips	0.50		
UDL	Z		0.15 klf	0.00		1.00

Column loads

Col #	Type	Dir	Mag1	y1/L	Mag2	y2/L
1	UDL	X	-0.360 klf	0.21		0.88
1	UDL	Z	0.360 klf	0.21		0.88

Bearing loads

Line #	Bearing #	Dir	Load kips
1	1	X	-3.62
1	1	Y	-2.86
1	1	Z	1.76
1	2	X	-3.62
1	2	Y	-0.00
1	2	Z	1.76
1	3	X	-3.62

Line #	Bearing #	Dir	Load kips
1	3	Y	-0.00
1	3	Z	1.76
1	4	X	-3.62
1	4	Y	-0.00
1	4	Z	1.76
1	5	X	-3.62
1	5	Y	-0.00
1	5	Z	1.76
1	6	X	-3.62
1	6	Y	2.86
1	6	Z	1.76
2	1	X	-3.95
2	1	Y	-3.12
2	1	Z	1.91
2	2	X	-3.95
2	2	Y	-0.00
2	2	Z	1.91
2	3	X	-3.95
2	3	Y	-0.00
2	3	Z	1.91
2	4	X	-3.95
2	4	Y	-0.00
2	4	Z	1.91
2	5	X	-3.95
2	5	Y	-0.00
2	5	Z	1.91
2	6	X	-3.95
2	6	Y	3.12
2	6	Z	1.91

Auto generation details:

Generated Wind Load on Structure

Angle of wind = 45.00 deg Elevation above which wind load acts = 60.00 ft

Default wind pressure:

Wind pressure for superstructure: Wind pressure for substructure:

Transverse 33.000 psf Cap 40.000 psf

Longitudinal 16.000 psf Column 40.000 psf

Overturning not considered

Loadcase ID: W5 Name: Angle: 60

Multiplier = 1.000

Cap loads

Type	Dir	Arm ft	Mag1	x1/L	Mag2	x2/L

Copyright © Bentley Systems, Inc. 1984 - 2009.

Type	Dir	Arm ft	Mag1	x1/L	Mag2	x2/L
Force	X	0.00	-5.53 kips	0.50		
UDL	Z		0.22 klf	0.00		1.00

Column loads

Col #	Type	Dir	Mag1	y1/L	Mag2	y2/L
1	UDL	X	-0.268 klf	0.21		0.88
1	UDL	Z	0.464 klf	0.21		0.88

Bearing loads

Line #	Bearing #	Dir	Load kips
1	1	X	-1.87
1	1	Y	-1.47
1	1	Z	2.09
1	2	X	-1.87
1	2	Y	-0.00
1	2	Z	2.09
1	3	X	-1.87
1	3	Y	-0.00
1	3	Z	2.09
1	4	X	-1.87
1	4	Y	-0.00
1	4	Z	2.09
1	5	X	-1.87
1	5	Y	-0.00
1	5	Z	2.09
1	6	X	-1.87
1	6	Y	1.47
1	6	Z	2.09
2	1	X	-2.03
2	1	Y	-1.61
2	1	Z	2.27
2	2	X	-2.03
2	2	Y	-0.00
2	2	Z	2.27
2	3	X	-2.03
2	3	Y	-0.00
2	3	Z	2.27
2	4	X	-2.03
2	4	Y	-0.00
2	4	Z	2.27
2	5	X	-2.03
2	5	Y	-0.00
2	5	Z	2.27
2	6	X	-2.03
2	6	Y	1.61
2	6	Z	2.27

Auto generation details:

Generated Wind Load on Structure

Angle of wind = 60.00 deg Elevation above which wind load acts = 60.00 ft

Default wind pressure:

Wind pressure for superstructure:	Wind pressure for substructure:
Transverse 17.000 psf	Cap 40.000 psf
Longitudinal 19.000 psf	Column 40.000 psf

Overturning not considered

Loadcase ID: WL1 Name: Angle: 0

Multiplier = 1.000

Bearing loads

Line #	Bearing #	Dir	Load kips
1	1	X	-1.12
1	1	Y	-2.30
1	1	Z	0.00
1	2	X	-1.12
1	2	Y	-0.00
1	2	Z	0.00
1	3	X	-1.12
1	3	Y	-0.00
1	3	Z	0.00
1	4	X	-1.12
1	4	Y	-0.00
1	4	Z	0.00
1	5	X	-1.12
1	5	Y	-0.00
1	5	Z	0.00
1	6	X	-1.12
1	6	Y	2.30
1	6	Z	0.00
2	1	X	-1.22
2	1	Y	-2.51
2	1	Z	0.00
2	2	X	-1.22
2	2	Y	-0.00
2	2	Z	0.00
2	3	X	-1.22
2	3	Y	-0.00
2	3	Z	0.00

Line #	Bearing #	Dir	Load kips
2	4	X	-1.22
2	4	Y	-0.00
2	4	Z	0.00
2	5	X	-1.22
2	5	Y	-0.00
2	5	Z	0.00
2	6	X	-1.22
2	6	Y	2.51
2	6	Z	0.00

Auto generation details:

Generated Wind Load on Live Load

Angle of wind = 0.00 deg Live load length = 140.00 ft

Loadcase ID: WL2 Name: Angle: 15

Multiplier = 1.000

Bearing loads

Line #	Bearing #	Dir	Load kips
1	1	X	-0.98
1	1	Y	-2.03
1	1	Z	0.13
1	2	X	-0.98
1	2	Y	-0.00
1	2	Z	0.13
1	3	X	-0.98
1	3	Y	-0.00
1	3	Z	0.13
1	4	X	-0.98
1	4	Y	-0.00
1	4	Z	0.13
1	5	X	-0.98
1	5	Y	-0.00
1	5	Z	0.13
1	6	X	-0.98
1	6	Y	2.03
1	6	Z	0.13
2	1	X	-1.07
2	1	Y	-2.21
2	1	Z	0.15

Line #	Bearing #	Dir	Load kips
2	2	X	-1.07
2	2	Y	-0.00
2	2	Z	0.15
2	3	X	-1.07
2	3	Y	-0.00
2	3	Z	0.15
2	4	X	-1.07
2	4	Y	-0.00
2	4	Z	0.15
2	5	X	-1.07
2	5	Y	-0.00
2	5	Z	0.15
2	6	X	-1.07
2	6	Y	2.21
2	6	Z	0.15

Auto generation details:

Generated Wind Load on Live Load

Angle of wind = 15.00 deg Live load length = 140.00 ft

Loadcase ID: WL3 Name: Angle: 30

Multiplier = 1.000

Bearing loads

Line #	Bearing #	Dir	Load kips
1	1	X	-0.92
1	1	Y	-1.89
1	1	Z	0.27
1	2	X	-0.92
1	2	Y	-0.00
1	2	Z	0.27
1	3	X	-0.92
1	3	Y	-0.00
1	3	Z	0.27
1	4	X	-0.92
1	4	Y	-0.00
1	4	Z	0.27
1	5	X	-0.92
1	5	Y	-0.00
1	5	Z	0.27

Line #	Bearing #	Dir	Load kips
1	6	X	-0.92
1	6	Y	1.89
1	6	Z	0.27
2	1	X	-1.00
2	1	Y	-2.06
2	1	Z	0.29
2	2	X	-1.00
2	2	Y	-0.00
2	2	Z	0.29
2	3	X	-1.00
2	3	Y	-0.00
2	3	Z	0.29
2	4	X	-1.00
2	4	Y	-0.00
2	4	Z	0.29
2	5	X	-1.00
2	5	Y	-0.00
2	5	Z	0.29
2	6	X	-1.00
2	6	Y	2.06
2	6	Z	0.29

Auto generation details:

Generated Wind Load on Live Load

Angle of wind = 30.00 deg Live load length = 140.00 ft

Loadcase ID: WL4 Name: Angle: 45

Multiplier = 1.000

Bearing loads

Line #	Bearing #	Dir	Load kips
1	1	X	-0.74
1	1	Y	-1.52
1	1	Z	0.36
1	2	X	-0.74
1	2	Y	-0.00
1	2	Z	0.36
1	3	X	-0.74
1	3	Y	-0.00
1	3	Z	0.36

Line #	Bearing #	Dir	Load kips
1	4	X	-0.74
1	4	Y	-0.00
1	4	Z	0.36
1	5	X	-0.74
1	5	Y	-0.00
1	5	Z	0.36
1	6	X	-0.74
1	6	Y	1.52
1	6	Z	0.36
2	1	X	-0.80
2	1	Y	-1.66
2	1	Z	0.39
2	2	X	-0.80
2	2	Y	-0.00
2	2	Z	0.39
2	3	X	-0.80
2	3	Y	-0.00
2	3	Z	0.39
2	4	X	-0.80
2	4	Y	-0.00
2	4	Z	0.39
2	5	X	-0.80
2	5	Y	-0.00
2	5	Z	0.39
2	6	X	-0.80
2	6	Y	1.66
2	6	Z	0.39

Auto generation details:

Generated Wind Load on Live Load

Angle of wind = 45.00 deg Live load length = 140.00 ft

Loadcase ID: WL5 Name: Angle: 60

Multiplier = 1.000

Bearing loads

Line #	Bearing #	Dir	Load kips
1	1	X	-0.38
1	1	Y	-0.78
1	1	Z	0.42

Line #	Bearing #	Dir	Load kips
1	2	X	-0.38
1	2	Y	-0.00
1	2	Z	0.42
1	3	X	-0.38
1	3	Y	-0.00
1	3	Z	0.42
1	4	X	-0.38
1	4	Y	-0.00
1	4	Z	0.42
1	5	X	-0.38
1	5	Y	-0.00
1	5	Z	0.42
1	6	X	-0.38
1	6	Y	0.78
1	6	Z	0.42
2	1	X	-0.41
2	1	Y	-0.85
2	1	Z	0.46
2	2	X	-0.41
2	2	Y	-0.00
2	2	Z	0.46
2	3	X	-0.41
2	3	Y	-0.00
2	3	Z	0.46
2	4	X	-0.41
2	4	Y	-0.00
2	4	Z	0.46
2	5	X	-0.41
2	5	Y	-0.00
2	5	Z	0.46
2	6	X	-0.41
2	6	Y	0.85
2	6	Z	0.46

Auto generation details:

Generated Wind Load on Live Load

Angle of wind = 60.00 deg Live load length = 140.00 ft

Loadcase ID: T1 Name: +Z

Multiplier = 1.000

Bearing loads

Line #	Bearing #	Dir	Load kips
1	1	X	-0.00
1	1	Z	6.32
1	2	X	-0.00
1	2	Z	6.32
1	3	X	-0.00
1	3	Z	6.32
1	4	X	-0.00
1	4	Z	6.32
1	5	X	-0.00
1	5	Z	6.32
1	6	X	-0.00
1	6	Z	6.32
2	1	X	-0.00
2	1	Z	6.32
2	2	X	-0.00
2	2	Z	6.32
2	3	X	-0.00
2	3	Z	6.32
2	4	X	-0.00
2	4	Z	6.32
2	5	X	-0.00
2	5	Z	6.32
2	6	X	-0.00
2	6	Z	6.32

Auto generation details:

Bearing type
Elastomeric Bearings
Direction of thermal force: +(Z)
Length of Superstructure Contributing, L: 280.000 ft
Change in temperature: 40.000 ºF
Coefficient of thermal expansion: 6.0e-006 ft/ºF
Area of bearing: 220.00 in^2
Shear modulus of Elastomer: 0.20 kips
Total Elastomer Thickness: 3.25 in

Loadcase ID: T2 Name: -Z
Multiplier = 1.000

Bearing loads

Line #	Bearing #	Dir	Load kips
1	1	X	0.00
1	1	Z	-6.32
1	2	X	0.00
1	2	Z	-6.32
1	3	X	0.00
1	3	Z	-6.32
1	4	X	0.00
1	4	Z	-6.32
1	5	X	0.00
1	5	Z	-6.32
1	6	X	0.00
1	6	Z	-6.32
2	1	X	0.00
2	1	Z	-6.32
2	2	X	0.00
2	2	Z	-6.32
2	3	X	0.00
2	3	Z	-6.32
2	4	X	0.00
2	4	Z	-6.32
2	5	X	0.00
2	5	Z	-6.32
2	6	X	0.00
2	6	Z	-6.32

Auto generation details:

Bearing type
Elastomeric Bearings
Direction of thermal force: -(Z)
Length of Superstructure Contributing, L: 280.000 ft
Change in temperature: 40.000 ºF
Coefficient of thermal expansion: 6.0e-006 ft/ºF
Area of bearing: 220.00 in^2
Shear modulus of Elastomer: 0.20 kips
Total Elastomer Thickness: 3.25 in

Selected load groups
SERVICE GROUP I
SERVICE GROUP IA
SERVICE GROUP II
SERVICE GROUP III
SERVICE GROUP IV
SERVICE GROUP V
SERVICE GROUP VI
LOAD FACTOR GROUP I
LOAD FACTOR GROUP IA

LOAD FACTOR GROUP II
LOAD FACTOR GROUP III
LOAD FACTOR GROUP IV
LOAD FACTOR GROUP V
LOAD FACTOR GROUP VI