STATE	PROJECT NUMBER	SHEET NO.	TOTAL SHEETS
GA	NH000-0073-03(242)		

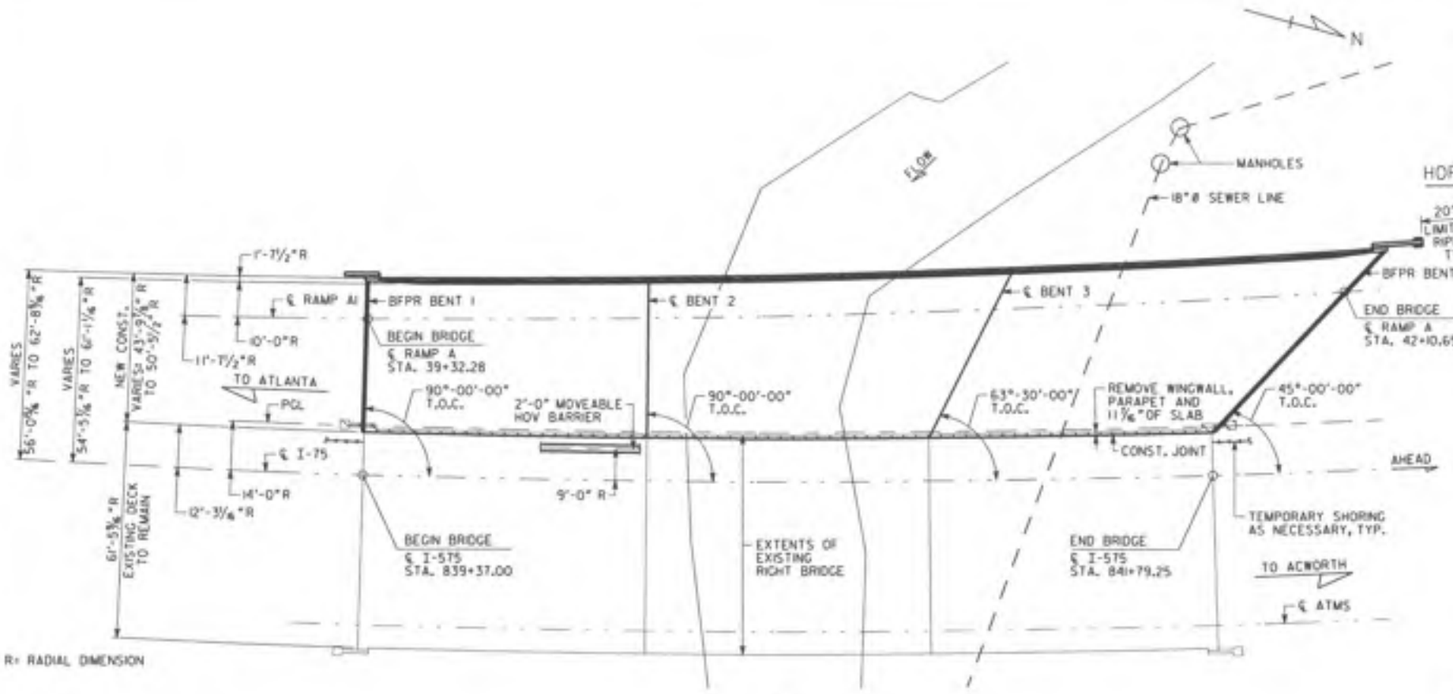

R= RADIAL DIMENSION

PLAN
SCALE: 1" = 20'-0"

P.I. STA. = 844+76.91
Δ = 20°-18'-24"
D = 1°-28'-36"
T = 694.86 FT
L = 1375.14 FT
R = 3880.00 FT

℄ I-75 HORIZONTAL CURVE DATA

-2.7292% +2.2110%
P.V.I. STA. 841+93.13 EL. 946.07
1800 FT V.C.

I-75 GRADE DATA

P.I. STA. = 42+12.11
Δ = 12°-55'-47.5"
D = 1°-29'-47.55"
T = 433.83 FT
L = 863.98 FT
R = 3828.55 FT

℄ RAMP A1 HORIZONTAL CURVE DATA

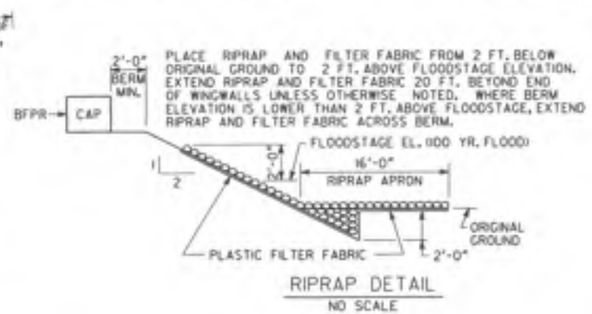

RIPRAP DETAIL
NO SCALE

DESIGN DATA

SPECIFICATIONS ---------- AASHTO (17TH EDITION, 2002 (DESIGNED FOR SEISMIC PERFORMANCE CATEGORY B)
TYPICAL HS20-44 AND/OR MILITARY LOADING --- IMPACT ALLOWED
FUTURE PAVING ALLOWANCE ---------- 30 LBS PER SQ FT

WIDENED BRIDGE CONSISTS OF

1 - 80'-9" W BEAM COMPOSITE SIMPLE SPAN ---------- SPECIAL DESIGN
2 - 80'-9" PLATE GIRDER COMPOSITE SIMPLE SPANS (TRAPEZOID) --- SPECIAL DESIGN
2 - PILE END BENTS ---------- SPECIAL DESIGN
2 - CONCRETE INTERMEDIATE BENTS ---------- SPECIAL DESIGN

24" TYPE I RIP RAP

EXISTING UTILITIES ON BRIDGE

4 - 4 INCH DIAMETER ATMS ----- GEORGIA DEPARTMENT OF TRANSPORTATION

EXISTING UTILITIES UNDER BRIDGE

18" STEEL SANITARY SEWER

BERM ELEVATIONS ⊛		
BENT	LEFT	RIGHT
1	951.12	952.56
4	948.49	950.31

⊛NOTE: FOR BRIDGE ENDROLL STAKING PURPOSES ONLY.

NOTES:

1. * SLOPE NORMAL TO END BENTS.
2. ** STATIONS ARE ALONG ℄ I-75 AT THE INTERSECTION OF ℄ I-75 AND BFPR OR ℄ BENT. ELEVATIONS ARE ALONG PGL.
3. END BENT PILES NOT SHOWN.
4. THE PROPOSED BRIDGE DECK IS TO BE BUILT ON A CONSTANT CROSS SLOPE OF 4%, SLOPING DOWN TO THE LEFT.
5. REPAIR AND REPLACE EXISTING RIPRAP AS NEEDED. EXTEND APRON ACROSS TOE OF EXISTING SLOPES.
6. THE MINIMUM BOTTOM OF BEAM ELEVATION FOR THE PROPOSED BRIDGE SHALL BE NO LOWER THAN ELEVATION 943.59
7. THE PROPOSED BRIDGE BOTTOM OF BEAM ELEVATION IS 950.74

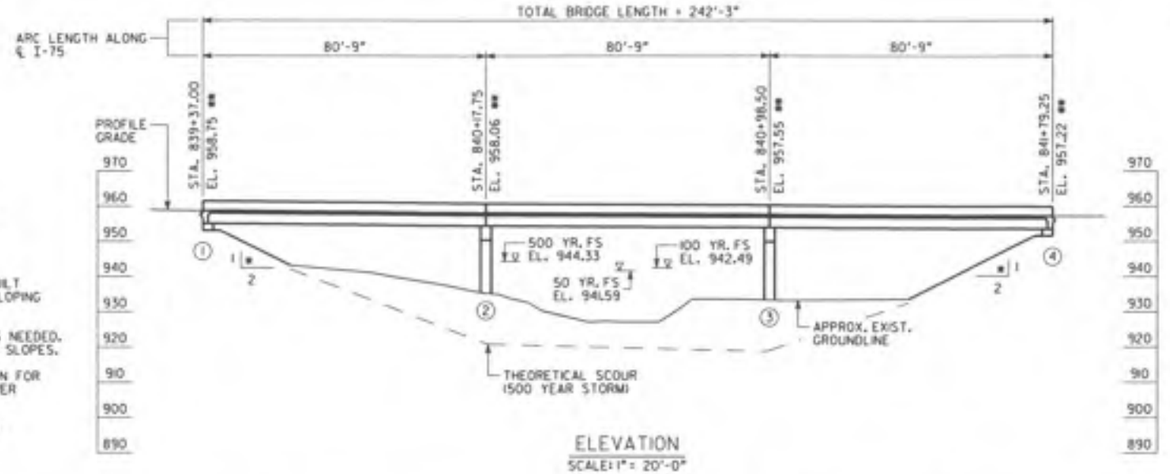

ELEVATION
SCALE: 1" = 20'-0"

DRAINAGE DATA

DRAINAGE AREA ---------- 11.0 SQ MI

FLOOD FREQUENCY	DISCHARGE THRU BRIDGE	MEAN VELOCITY	AREA OF OPENING UNDER FLOODSTAGE	BACKWATER
50 YEAR	6003 CFS	4.34 FPS	1382 SQ FT	0.49 FT
100 YEAR	6889 CFS	4.46 FPS	1544 SQ FT	0.37 FT
500 YEAR	8519 CFS	4.53 FPS	1881 SQ FT	0.08 FT

THEORETICAL SCOUR DEPTHS (FT)						
	100 YEAR STORM			500 YEAR STORM		
BENT LOCATION	GENERAL	LOCAL	TOTAL	GENERAL	LOCAL	TOTAL
BENT 2	1.0	13.0	14.0	1.0	13.3	14.3
BENT 3	3.4	13.0	16.4	1.0	13.3	14.3

EXISTING RIGHT BRIDGE SERIAL NO. 067-0083-0
EXISTING RIGHT BRIDGE I.D. NO. 067-0040D-270.25N
PROJECT P.I. NO. 114150

BRIDGE NO. 31

REVISIONS						
NO	DATE	DESCRIPTION	ORIG.	CHK'R	SUPV.	APPR.
A	6/30/09	Progress Drawings (50 % Revision 2)	AEM	JCR	GLE	SJL
B	9/25/09	50% SUBMISSION	AEM	JCR	GLE	SJL
C	11/30/09	PLOTTED PER GDOT'S TERMINATION FOR CONVENIENCE DIRECTION	AEM			

ABBAS ESHAGHI-MEYBODI 11/23/09
DRAWN BY DATE
CHECKED BY DATE
SUPERVISOR DATE
APPROVED DATE

GTP Georgia Transportation Partners

NORTHWEST I-75/I-575 CORRIDOR

DEPARTMENT OF TRANSPORTATION
STATE OF GEORGIA

JBT J.B. Trimble, Inc.
2550 Heritage Ct. SE Suite 250
Atlanta GA 30339-3062
(770) 952-1022

BRIDGE SHEET 1 OF 9

I-75 / I-575 NORTHWEST CORRIDOR

I-75 REVERSIBLE OVER NOONDAY CREEK

PLAN AND ELEVATION

COBB COUNTY NH000-0073-03(242)

DRAWING NO. 35-194

STATE	PROJECT NUMBER	SHEET NO.	TOTAL SHEETS
GA	NH000-0073-03(242)		

R = RADIAL DIMENSION

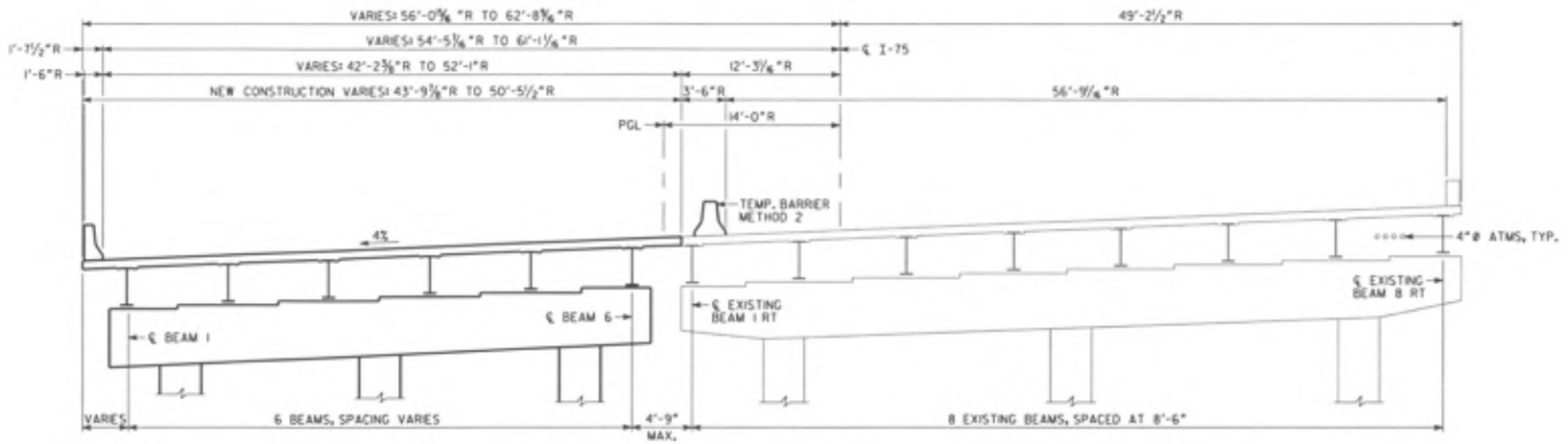

TYPICAL SECTION
(LOOKING AHEAD, RIGHT BRIDGE)

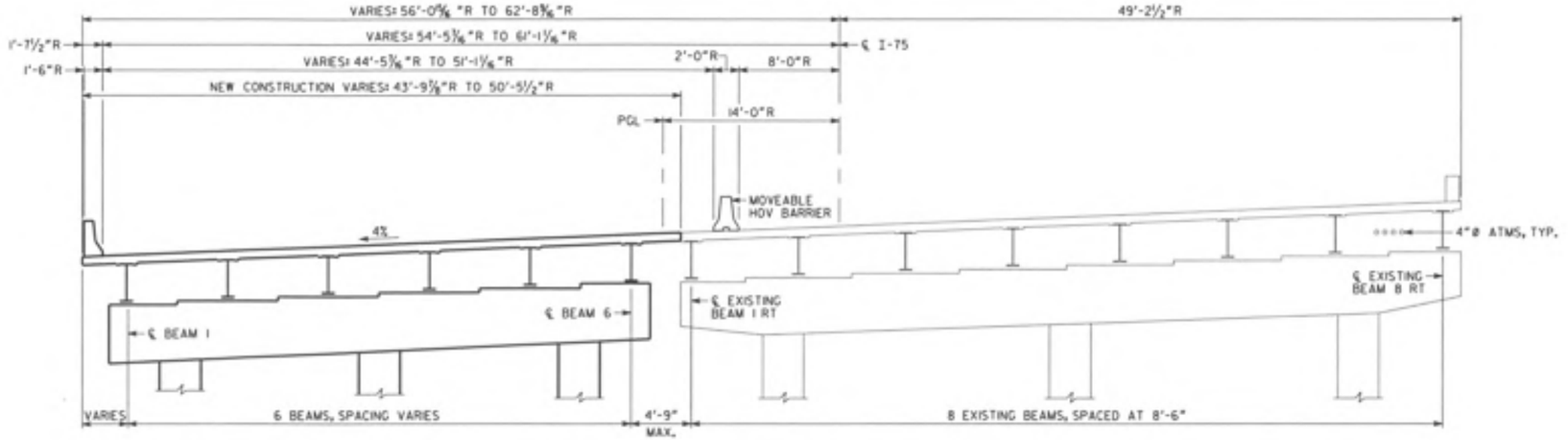

TYPICAL SECTION
(LOOKING AHEAD, RIGHT BRIDGE)

CONSTRUCTION SEQUENCE

1. PLACE TEMPORARY BARRIER. MAINTAIN THREE 12'-0" LANES OF TRAFFIC IN EACH DIRECTION ON EXISTING BRIDGES.
2. REMOVE PORTIONS OF EXISTING NORTH BOUND BRIDGE AS NECESSARY FOR NEW CONSTRUCTION.
3. CONSTRUCT NEW SUBSTRUCTURE.
4. CONSTRUCT NEW SUPERSTRUCTURE.

NOTE ⊗ IMPORTANT NOTICE: THIS DRAWING IS AN INCOMPLETE WORK-IN-PROGRESS AND ITS USE IS SUBJECT TO NOTE 1 ON DRAWING NO. 1-01.

BRIDGE NO. 31

ABBAS ESNAEIH-HEYDARI	11/20/09	
DRAWN BY	DATE	
CHECKED BY	DATE	
SUPERVISOR	DATE	
APPROVED	DATE	

REVISIONS

NO	DATE	DESCRIPTION	ORIG	CHKR	SUPR	APPR
A	6/30/09	Progress Drawings (50 % Revision 2)	AEM	JCR	GLE	S.A.
B	9/25/09	50% SUBMISSION	AEM	JCR	GLE	S.A.
C	11/30/09	PLOTTED PER CDOT'S TERMINATION FOR CONVENIENCE DIRECTION	AEM			

GTP Georgia Transportation Partners

NORTHWEST I-75/I-575 CORRIDOR

DEPARTMENT OF TRANSPORTATION
STATE OF GEORGIA

JBT J.B. Trimble, Inc.
2550 Heritage Ct. SE Suite 250
Atlanta GA 30339-3062
(770) 952-1022

BRIDGE SHEET 2 OF 9

I-75 / I-575 NORTHWEST CORRIDOR

I-75 REVERSIBLE OVER NOONDAY CREEK

CONSTRUCTION SEQUENCE

COBB COUNTY NH000-0073-03(242)

DRAWING NO. 35-195

STATE	PROJECT NUMBER	SHEET NO.	TOTAL SHEETS
GA	NH000-0073-03(242)		

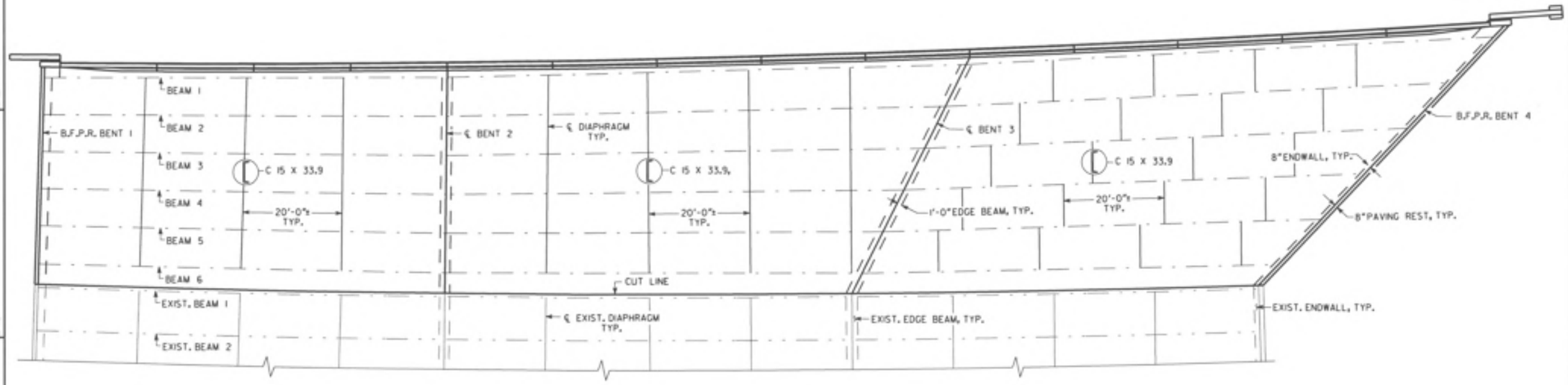

PLAN
SCALE: 1" = 10'-0"

NOTE !! IMPORTANT NOTICE!! THIS DRAWING IS AN INCOMPLETE WORK-IN-PROGRESS AND ITS USE IS SUBJECT TO NOTE 1 ON DRAWING NO. 1-01.

BRIDGE NO. 31

ABBAS ESHAGHI-HEYDARI	11/20/09
DRAWN BY	DATE
CHECKED BY	DATE
SUPERVISOR	DATE
APPROVED	DATE

REVISIONS

NO	DATE	DESCRIPTION	DRIG	CHKR	SUPR	APPR
A	6/30/09	Progress Drawings ISO 11 Revision 21	AEM	JCR	GLE	SJL
B	9/25/09	50% SUBMISSION	AEM	JCR	GLE	SJL
C	11/30/09	PLOTTED PER GDOT'S TERMINATION FOR CONVENIENCE DIRECTION	AEM			

GTP Georgia Transportation Partners

NORTHWEST I-75/I-575 CORRIDOR

DEPARTMENT OF TRANSPORTATION
STATE OF GEORGIA

JBT J.B. Trimble, Inc.
2550 Heritage Ct, SE Suite 250
Atlanta GA 30339-3062
(770) 952-1022

BRIDGE SHEET
3 OF 9

I-75 / I-575 NORTHWEST CORRIDOR

I-75 REVERSIBLE OVER NOONDAY CREEK

DECK PLAN

COBB COUNTY NH000-0073-03(242)

DRAWING NO. 35-196

n:\ga\255171\Drawings\Structure 31\preliminary\Noonday_DP.dgn 12/1/2009 11:46:24 am

STATE	PROJECT NUMBER	SHEET NO.	TOTAL SHEETS
GA	NH000-0073-03(242)		

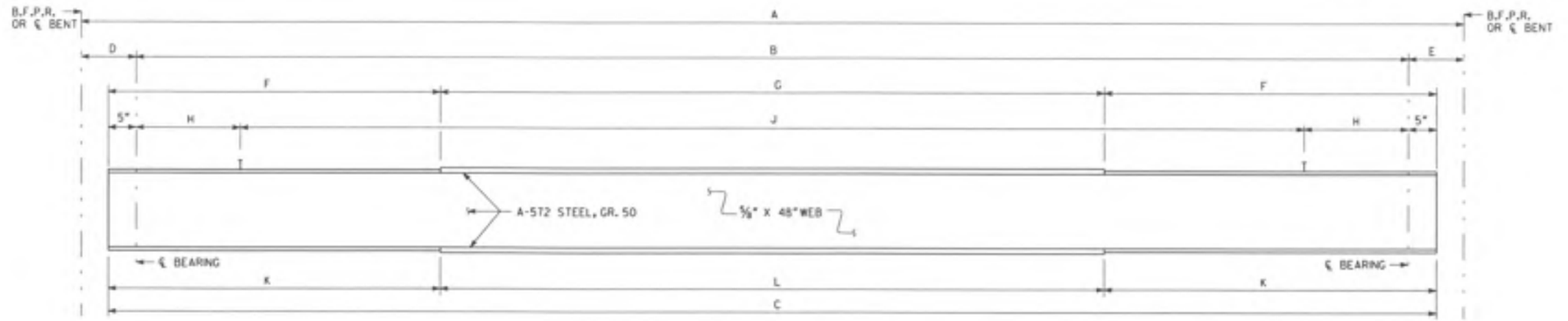

TABLE OF DIMENSIONS

SPAN	BEAM	A	B	C	D	E	F	G	H	J	K	L
1	1 - 6	80'-5"	78'-4"	79'-2"	1'-6"	1"	19'-7"(12" X ¾"℄)	40'-0"(12" X ¾"℄)	27 SPS. @ 10"	31 SPS. @ 12"s	19'-7"(12" X 1" ℄)	40'-0"(12" X 1¼"℄)
2	1	102'-5¼"	101'-3¼"	102'-1¼"	1"	1"	26'-0⅝"(12" X ¾"℄)	50'-0"(12" X 11/16"℄)	12 SPS. @ 9"	91 SPS. @ 11"s	26'-0⅝"(16" X 1⅜"℄)	50'-0"(16" X 2"℄)
	2	98'-5½"	97'-3½"	98'-1½"	1"	1"	25'-0¾"(12" X ¾"℄)	48'-0"(12" X 11/16"℄)	12 SPS. @ 9"	87 SPS. @ 11"s	25'-0¾"(16" X 1⅜"℄)	48'-0"(16" X 2"℄)
	3	94'-5⅝"	93'-3⅜"	94'-1⅝"	1"	1"	24'-0⅝ "(12" X ¾"℄)	46'-0"(12" X 1"℄)	16 SPS. @ 9"	76 SPS. @ 11"s	24'-0⅝ "(14" X 1⅜"℄)	46'-0"(14" X 2"℄)
	4	90'-6¼"	89'-4¼"	90'-2¼"	1"	1"	23'-1⅛"(12" X ¾"℄)	44'-0"(12" X 1"℄)	16 SPS. @ 9"	73 SPS. @ 11"s	23'-1⅛"(14" X 1⅜"℄)	44'-0"(14" X 2"℄)
	5	86'-6⅜"	85'-4⅜"	86'-2⅜"	1"	1"	22'-1⅝"(12" X ¾"℄)	42'-0"(12" X ¾"℄)	24 SPS. @ 9"	54 SPS. @ 11"s	22'-1⅝"(12" X 1¼"℄)	42'-0"(12" X 1¾"℄)
	6	82'-6⅜"	81'-4⅜"	82'-2⅜"	1"	1"	21'-1⅝"(12" X ¾EP.)	40'-0"(12" X ¾"℄)	24 SPS. @ 9"	24 SPS. @ 11"s	21'-1⅝"(12" X 1¼"℄)	40'-0"(12" X 1¾"℄)
3	1	104'-1¼"	102'-0¾"	102'-10¼"	1"	1'-6"	26'-5⅛"(12" X ¾"℄)	50'-0"(12" X 11/16"℄)	12 SPS. @ 9"	91 SPS. @ 11"s	26'-5⅛"(16" X 1⅜"℄)	50'-0"(16" X 2"℄)
	2	99'-9¼"	97'-8¼"	98'-6¼"	1"	1'-6"	25'-3⅛"02" X ¾"℄)	48'-0"(12" X 11/16"℄)	12 SPS. @ 9"	87 SPS. @ 11"s	25'-3⅛"(16" X 1⅜"℄)	48'-0"(16" X 2"℄)
	3	95'-5¼"	93'-4¼"	94'-2¼"	1"	1'-6"	24'-1⅛"(12" X ¾"℄)	46'-0"(12" X 1"℄)	16 SPS. @ 9"	76 SPS. @ 11"s	24'-1⅛"(14" X 1⅜"℄)	46'-0"(14" X 2"℄)
	4	91'-1¼"	89'-0¼"	89'-10¼"	1"	1'-6"	22'-11⅛"(12" X ¾"℄)	44'-0"(12" X 1"℄)	16 SPS. @ 9"	73 SPS. @ 11"s	22'-11⅛"(14" X 1⅜"℄)	44'-0"(14" X 2"℄)
	5	86'-9⅛"	84'-8⅛"	85'-6⅛"	1"	1'-6"	21'-9/16"(12" X ¾"℄)	42'-0"(12" X ¾"℄)	24 SPS. @ 9"	54 SPS. @ 11"s	21'-9/16"(12" X 1¼"℄)	42'-0"(12" X 1¾"℄)
	6	82'-5⅛"	80'-4⅛"	81'-2⅛"	1"	1'-6"	20'-7⅞"(12" X ¾"℄)	40'-0"(12" X ¾"℄)	24 SPS. @ 9"	24 SPS. @ 11"s	20'-7⅞"(12" X 1¼"℄)	40'-0"(12" X 1¾"℄)

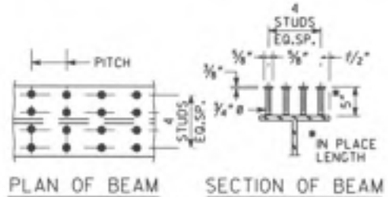

PLAN OF BEAM SECTION OF BEAM

STUD SHEAR CONNECTOR SHALL BE FULLY BUTT WELDED TO TOP FLANGE OF BEAM.

STUD SHEAR CONNECTOR DETAIL

NOTE ※ IMPORTANT NOTICE: THIS DRAWING IS AN INCOMPLETE WORK-IN-PROGRESS AND ITS USE IS SUBJECT TO NOTE 1 ON DRAWING NO. 1-01.

BRIDGE NO. 31

ARMIS ESHAGH-NEJAD 11/20/09
DRAWN BY DATE
CHECKED BY DATE
SUPERVISOR DATE
APPROVED DATE

NO	DATE	DESCRIPTION	ORIG	CHKR	SUPR	APPR
A	6/30/09	Progress Drawings (50 % Revision 2)	AEM	JCR	GLE	SJL
B	9/25/09	SDD SUBMISSION	AEM	JCR	GLE	SJL
C	11/30/09	PLOTTED PER GDOT'S TERMINATION FOR CONVENIENCE DIRECTION	AEM			

REVISIONS

GTP Georgia Transportation Partners

NORTHWEST I-75/I-575 CORRIDOR

DEPARTMENT OF TRANSPORTATION
STATE OF GEORGIA

JBT J.B. Trimble, Inc.
2550 Heritage Ct. SE Suite 250
Atlanta GA 30339-3062
(770) 952-1022

BRIDGE SHEET 4 OF 9

I-75 / I-575 NORTHWEST CORRIDOR

I-75 REVERSIBLE OVER NOONDAY CREEK
BEAM INFORMATION

COBB COUNTY NH000-0073-03(242)

DRAWING NO. 35-197

n:\jobs\2007\fracking\structs\25\preliminary\Noonday_BM.dgn 12/1/2009 11:40:09 AM

STATE	PROJECT NUMBER	SHEET NO.	TOTAL SHEETS
GA	NH000-0073-03(242)		

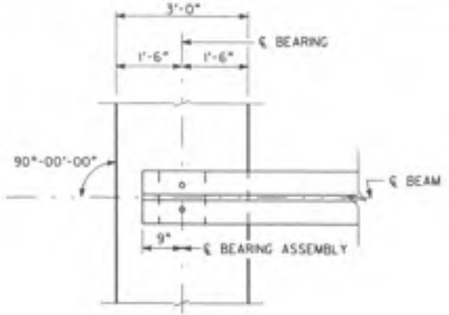

PLAN
BENTS 1 & 4

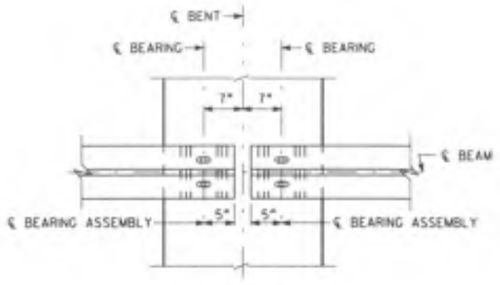

PLAN
BENTS 2

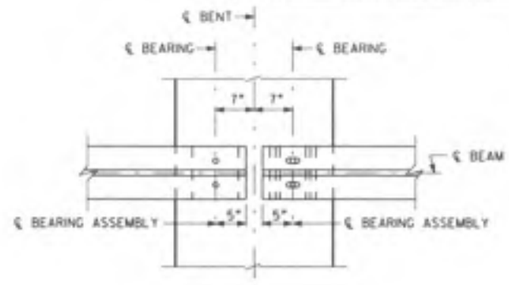

PLAN
BENTS 3

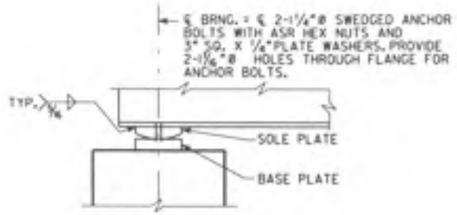

ELEVATION
BENTS 1 & 4

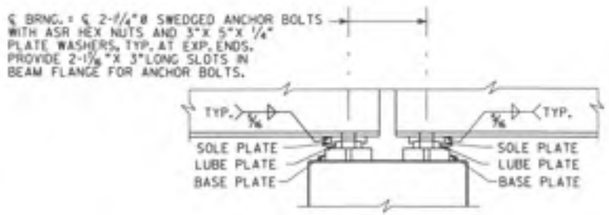

ELEVATION
BENT 2

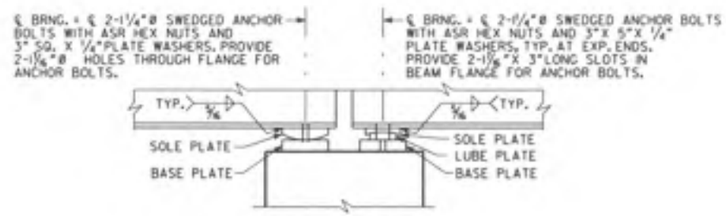

ELEVATION
BENT 3

NOTES:

1. ALL BEARING ASSEMBLY COMPONENTS SHALL BE ASTM A709 GRADE 36 STEEL.
2. SELF-LUBRICATING PLATES SHALL BE CAST BRONZE.
3. ANCHOR BOLTS, ASR HEX NUTS AND PLATE WASHERS SHALL BE ASTM A276 TYPE 304 STAINLESS STEEL. PROVIDE 2½"MIN. PROJECTION OF ANCHOR BOLT ABOVE TOP OF BEAM FLANGE. SET ANCHOR BOLTS 12"INTO CAP.

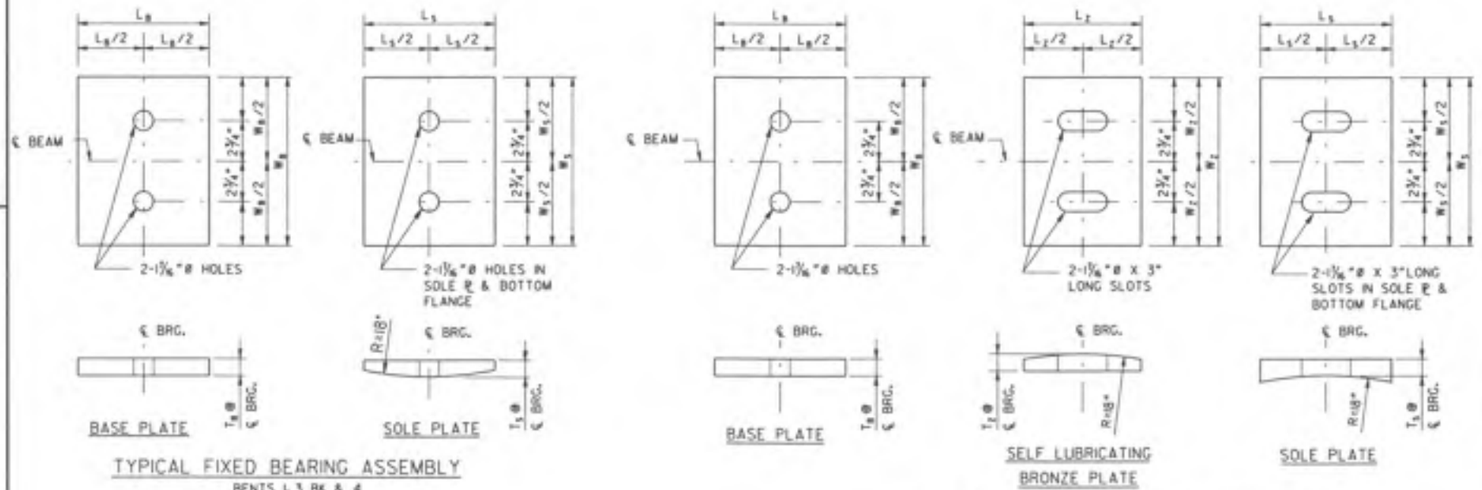

BEARING ASSEMBLY DIMENSIONS (IN.)

BENT LOCATION	BEAM	BEARING TYPE	BASE PLATE			SOLE PLATE			BRONZE PLATE			TOTAL BEARING DEPTH
			W_B	L_B	T_B	W_S	L_S	T_S	W_Z	L_Z	T_Z	
BENT 1	1 - 6	FIXED	12.00	12.00	2.50	12.0	12.0	2.25	-	-	-	4.75
BENT 3 BK	5 & 6											
BENT 4	5 & 6											
BENT 2 BK	1 - 6	EXPANSION	12.00	12.00	1.00	12.0	9.0	1.50	12.0	7.0	1.00	3.50
BENT 2 AH	5 & 6											
BENT 3 AH	5 & 6											
BENT 2 AH	3 & 4	EXPANSION	14.00	11.25	1.00	14.0	10.0	1.75	12.0	8.0	1.25	4.00
BENT 3 AH	3 & 4											
BENT 2 AH	1 & 2	EXPANSION	16.00	10.25	1.00	16.0	10.0	2.00	12.0	8.0	1.25	4.25
BENT 3 AH	1 & 2											
BENT 3 BK	3 & 4	FIXED	14.00	11.25	2.25	14.0	11.25	2.50	-	-	-	4.75
BENT 4	3 & 4											
BENT 3 BK	1 & 2	FIXED	16.00	10.25	2.25	16.0	10.25	2.75	-	-	-	5.00
BENT 4	1 & 2											

NOTE ® IMPORTANT NOTICE: THIS DRAWING IS AN INCOMPLETE WORK-IN-PROGRESS AND ITS USE IS SUBJECT TO NOTE 1 ON DRAWING NO. 1-01.

BRIDGE NO. 31

ABBAS ESHAGHI-HEYDOZ	11/20/09	
DRAWN BY	DATE	
CHECKED BY	DATE	
SUPERVISOR	DATE	
APPROVED	DATE	

REVISIONS

NO	DATE	DESCRIPTION	DRG	CHKR	SUPV	APPR
A	6/30/09	Progress Drawings ISO 11 Revision 21	AEM	JDR	G.E.	S.A.
B	9/25/09	50% SUBMISSION	AEM	JDR	G.E.	S.A.
C	11/30/09	PLOTTED PER CDOT'S TERMINATION FOR CONVENIENCE DIRECTION	AEM			

GTP Georgia Transportation Partners

NORTHWEST I-75/I-575 CORRIDOR

DEPARTMENT OF TRANSPORTATION
STATE OF GEORGIA

JBT J.B. Trimble, Inc.
2550 Heritage Ct, SE Suite 250
Atlanta GA 30339-3062
(770) 952-1022

BRIDGE SHEET
5 OF 9

I-75 / I-575 NORTHWEST CORRIDOR

I-75 REVERSIBLE OVER NOONDAY CREEK

BEARING INFORMATION

COBB COUNTY NH000-0073-03(242)

DRAWING NO. 35-198

STATE	PROJECT NUMBER	SHEET NO.	TOTAL SHEETS
GA	NH000-0073-03(242)		

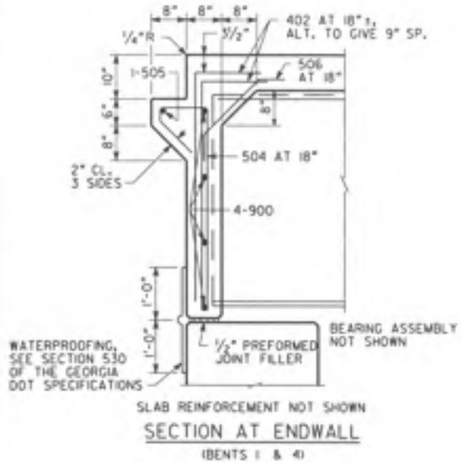

SECTION AT ENDWALL

(BENTS 1 & 4)

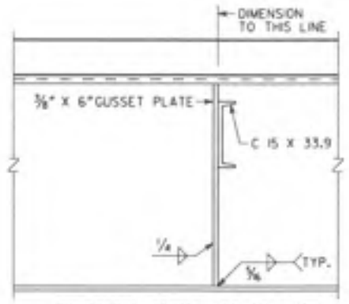

SECTION THRU DIAPHRAGM

(ALL SPANS)

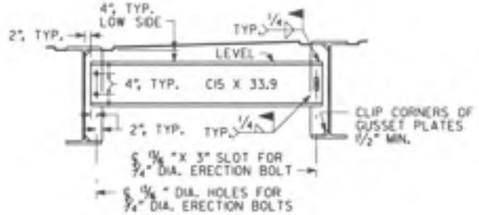

DIAPHRAGM DETAILS

NOTE: WELD DIAPHRAGMS X DECK IS POURED.

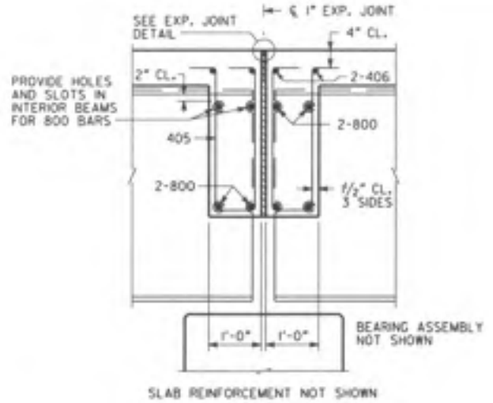

SECTION THRU EDGE BEAM

(BENTS 2 & 3)

JOINT OPENING		
TEMPERATURE (°F)	BENT 2 W (IN.)	BENT 3 W (IN.)
30	0.961	0.984
60	0.750	0.750
90	0.539	0.516

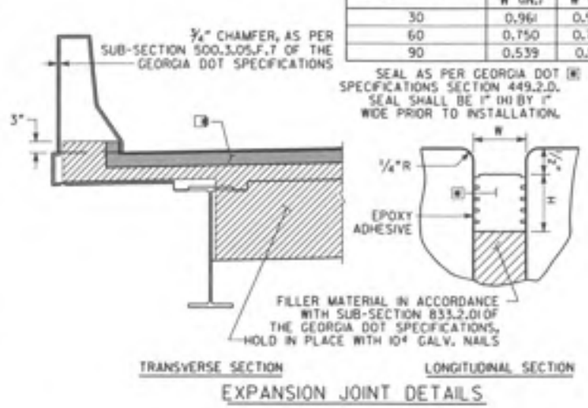

EXPANSION JOINT DETAILS

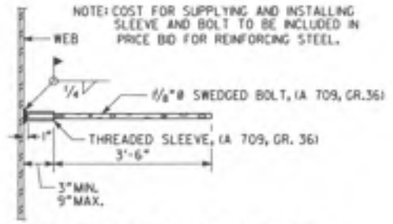

EDGE BEAM BAR LAP DETAIL

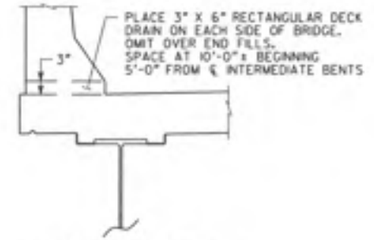

DECK DRAIN DETAIL

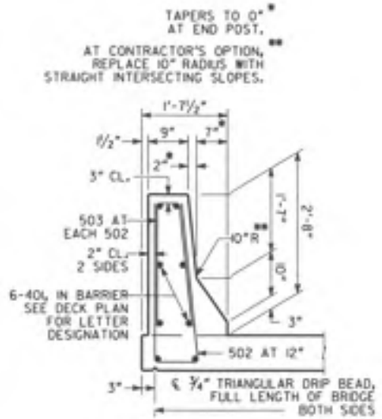

BARRIER DETAIL

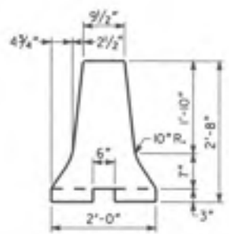

HOV BARRIER DETAIL

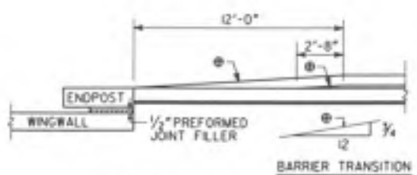

BARRIER TRANSITION DETAIL

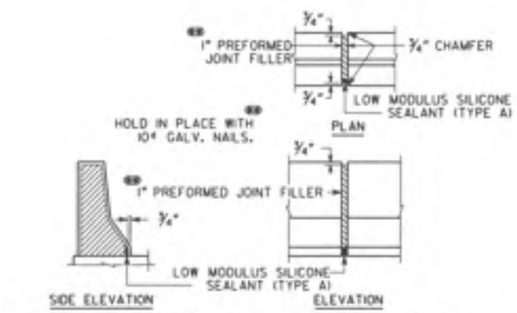

DETAILS OF 1" EXPANSION JOINT IN BARRIER

NOTE ‼ IMPORTANT NOTICE! THIS DRAWING IS AN INCOMPLETE WORK-IN-PROGRESS AND ITS USE IS SUBJECT TO NOTE 1 ON DRAWING NO. 1-01.

BRIDGE NO. 31

REVISIONS							
NO	DATE	DESCRIPTION	DRG	CHKR	SUPV	APPR
A	6/30/09	Progress Drawings ISO 11 Revision 21	AEM	JDR	DLE	SJL
B	9/25/09	SDC SUBMISSION	AEM	JDR	DLE	SJL
C	11/30/09	PLOTTED PER GDOT'S TYPICAL FOR CONVENIENCE DIRECTION	AEM			

ABBAS ESHAGHPEYKOOH 11/20/09 DRAWN BY DATE

CHECKED BY DATE

SUPERVISOR DATE

APPROVED DATE

GTP Georgia Transportation Partners

NORTHWEST I-75/I-575 CORRIDOR

DEPARTMENT OF TRANSPORTATION
STATE OF GEORGIA

JBT J.B. Trimble, Inc.
2550 Heritage Ct, SE Suite 250
Atlanta GA 30339-3062
(770) 952-1022

BRIDGE SHEET 6 OF 9

I-75 / I-575 NORTHWEST CORRIDOR

I-75 REVERSIBLE OVER NOONDAY CREEK

MISCELLANEOUS DETAILS

COBB COUNTY NH000-0073-03(242)

DRAWING NO. 35-199

STATE	PROJECT NUMBER	SHEET NO.	TOTAL SHEETS
GA	NH000-0073-03(242)		

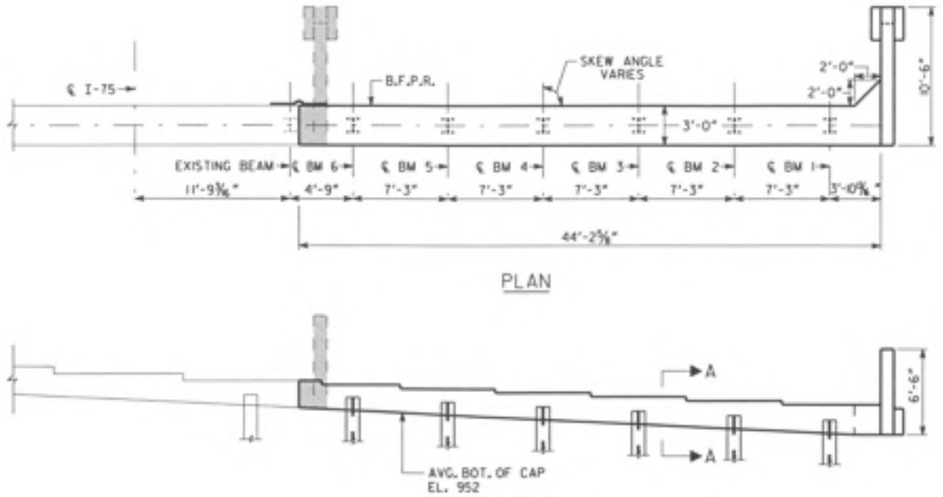

PLAN

ELEVATION
(BENT 1 LOOKING BACK)

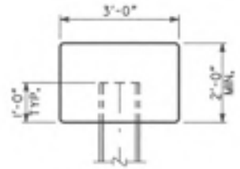

SECTION A-A

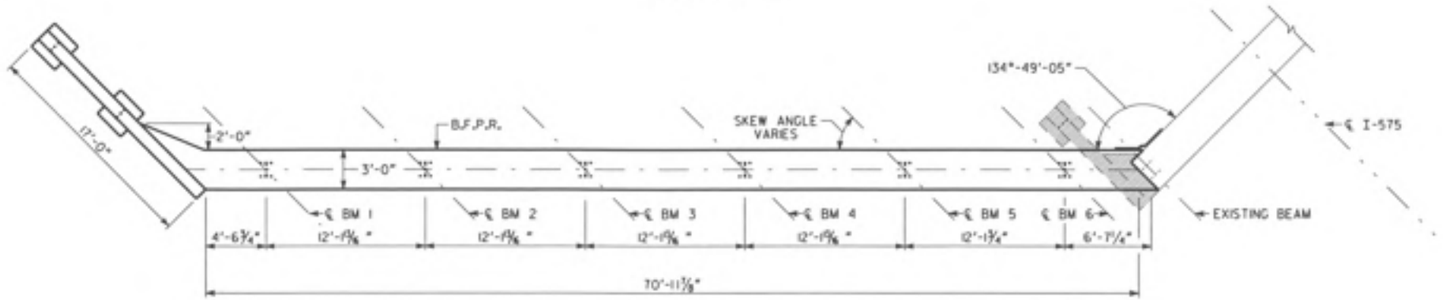

PLAN

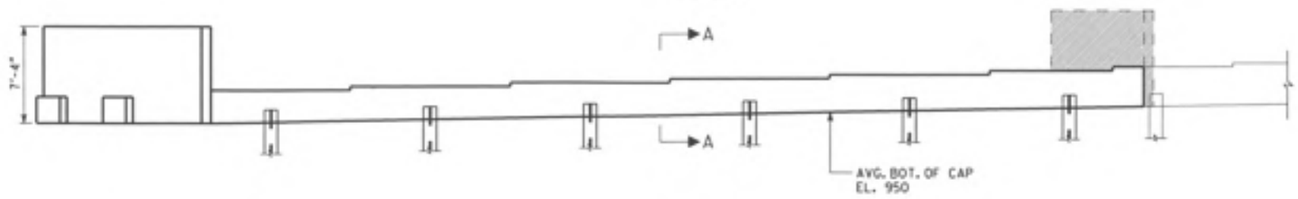

ELEVATION
(BENT 4 LOOKING AHEAD)

NOTE:

1. MAINTAIN 2" CL. ON ALL REINFORCEMENT UNLESS OTHERWISE NOTED.

PLAN DRIVING OBJECTIVE

ALL PILES SHALL BE DRIVEN TO A DRIVING RESISTANCE OF 96 TONS AFTER AN ESTIMATED TIP ELEVATION SHOWN BELOW IS ACHIEVED

BENT	EST. TIP
1	XXX
4	XXX

ALL PILES SHALL BE STEEL H, HP 14 X 89

NOTE 1: IMPORTANT NOTICE: THIS DRAWING IS AN INCOMPLETE WORK-IN-PROGRESS AND ITS USE IS SUBJECT TO NOTE 1 ON DRAWING NO. 1-01.

BRIDGE NO. 31

ABBAS ESNAEIH-HEYDARI 11/20/09
DRAWN BY DATE
CHECKED BY DATE
SUPERVISOR DATE
APPROVED DATE

REVISIONS							
NO	DATE	DESCRIPTION	DRG	CHKR	SUPV	APPR
A	6/30/09	Progress Drawings ISO !!! Revision 2!	AEM	JCR	GLE	SJL
B	9/25/09	SOIL SUBMISSION	AEM	JCR	GLE	SJL
C	11/30/09	PLOTTED PER GDOT'S TERMINATION FOR CONVENIENCE DIRECTION	AEM			

GTP Georgia Transportation Partners

NORTHWEST I-75/I-575 CORRIDOR

DEPARTMENT OF TRANSPORTATION
STATE OF GEORGIA

JBT J.B. Trimble, Inc.
2550 Heritage Ct, SE Suite 250
Atlanta GA 30339-3062
(770) 952-1022

BRIDGE SHEET 7 OF 9

I-75 / I-575 NORTHWEST CORRIDOR

I-75 REVERSIBLE OVER NOONDAY CREEK
END BENTS

COBB COUNTY NH000-0073-03(242)

DRAWING NO. 35-200

STATE	PROJECT NUMBER	SHEET NO.	TOTAL SHEETS
GA	NH000-0073-03(242)		

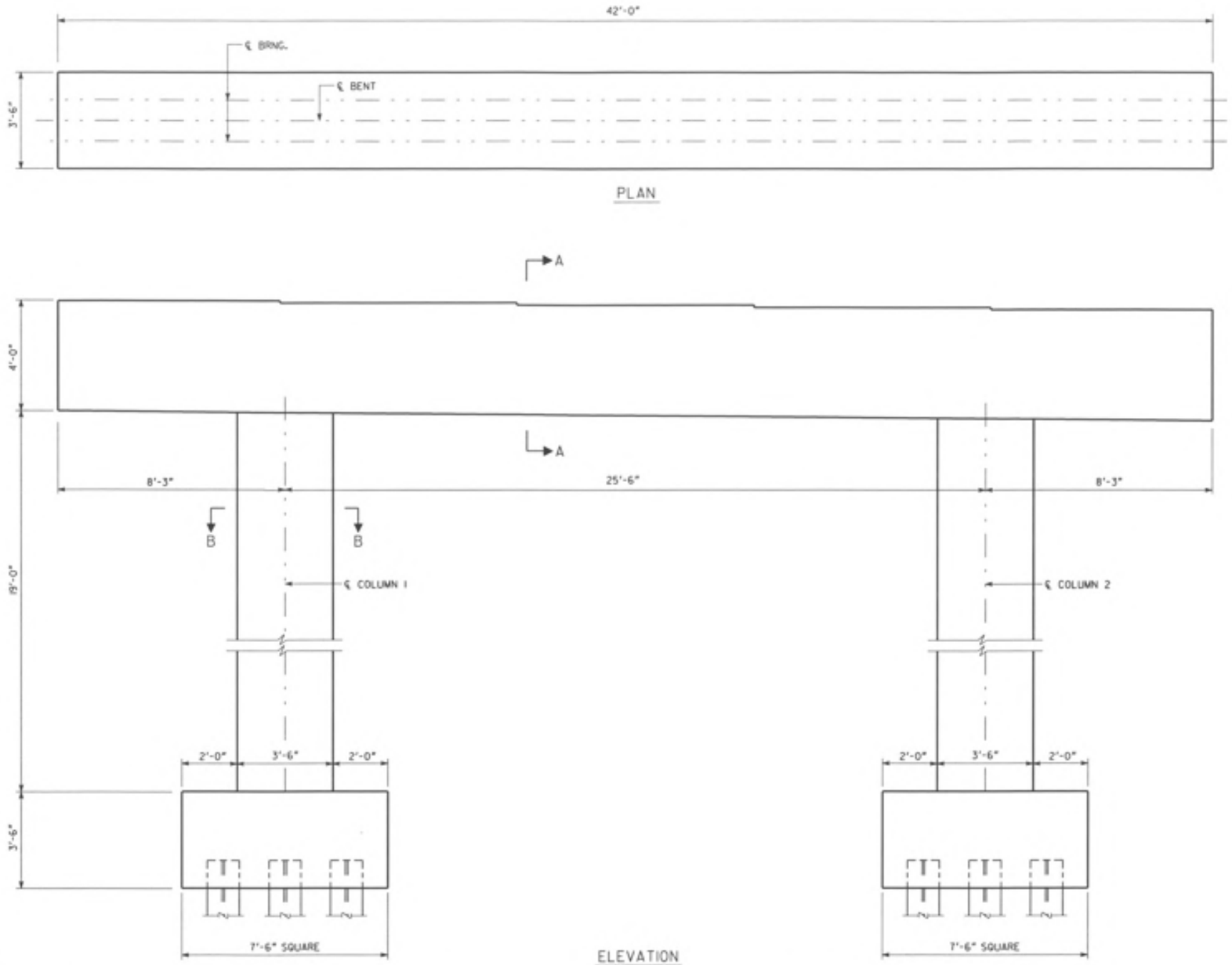

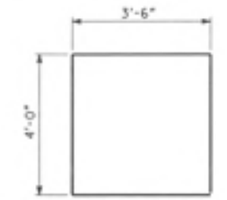

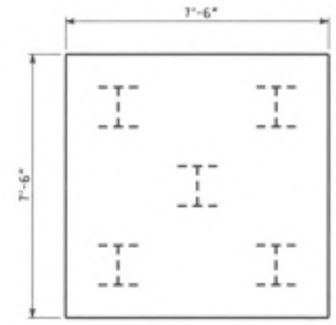

PLAN DRIVING OBJECTIVE

ALL PILES SHALL BE DRIVEN TO A DRIVING RESISTANCE OF 96 TONS AFTER A MINIMUM TIP ELEVATION OF XXX IS ACHIEVED.

ALL PILES SHALL BE STEEL H, HP 14 X 73

NOTE # IMPORTANT NOTICE: THIS DRAWING IS AN INCOMPLETE WORK-IN-PROGRESS AND ITS USE IS SUBJECT TO NOTE 1 ON DRAWING NO. 1-01.

BRIDGE NO. 31

ABBAS ESHAGIEH-MEYBODI	11/20/09
DRAWN BY	DATE
CHECKED BY	DATE
SUPERVISOR	DATE
APPROVED	DATE

REVISIONS

NO	DATE	DESCRIPTION	ORIG	CHKR	SUPV	APPR
A	6/30/09	Progress Drawings (50 ⅓ Revision 2)	AEM	JCR	GLE	SJL
B	9/25/09	50% SUBMISSION	AEM	JCR	GLE	SJL
C	11/30/09	PLOTTED PER GDOT'S TERMINATION FOR CONVENIENCE DIRECTION	AEM			

GTP Georgia Transportation Partners

NORTHWEST I-75/I-575 CORRIDOR

DEPARTMENT OF TRANSPORTATION
STATE OF GEORGIA

JBT J.B. Trimble, Inc.
2550 Heritage Ct, SE Suite 250
Atlanta GA 30339-3062
(770) 952-1022

BRIDGE SHEET 8 OF 9

I-75 / I-575 NORTHWEST CORRIDOR

I-75 REVERSIBLE OVER NOONDAY CREEK
BENT 2 INFORMATION

COBB COUNTY NH000-0073-03(242)

DRAWING NO. 35-201

STATE	PROJECT NUMBER	SHEET NO.	TOTAL SHEETS
GA	NH000-0073-03(242)		

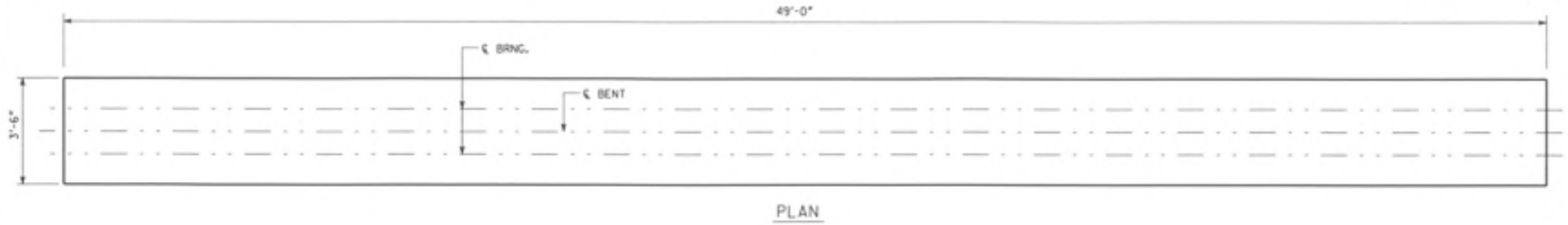

PLAN

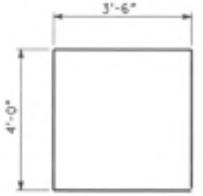

SECTION A-A

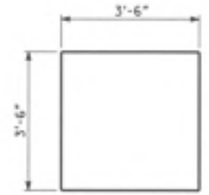

SECTION B-B

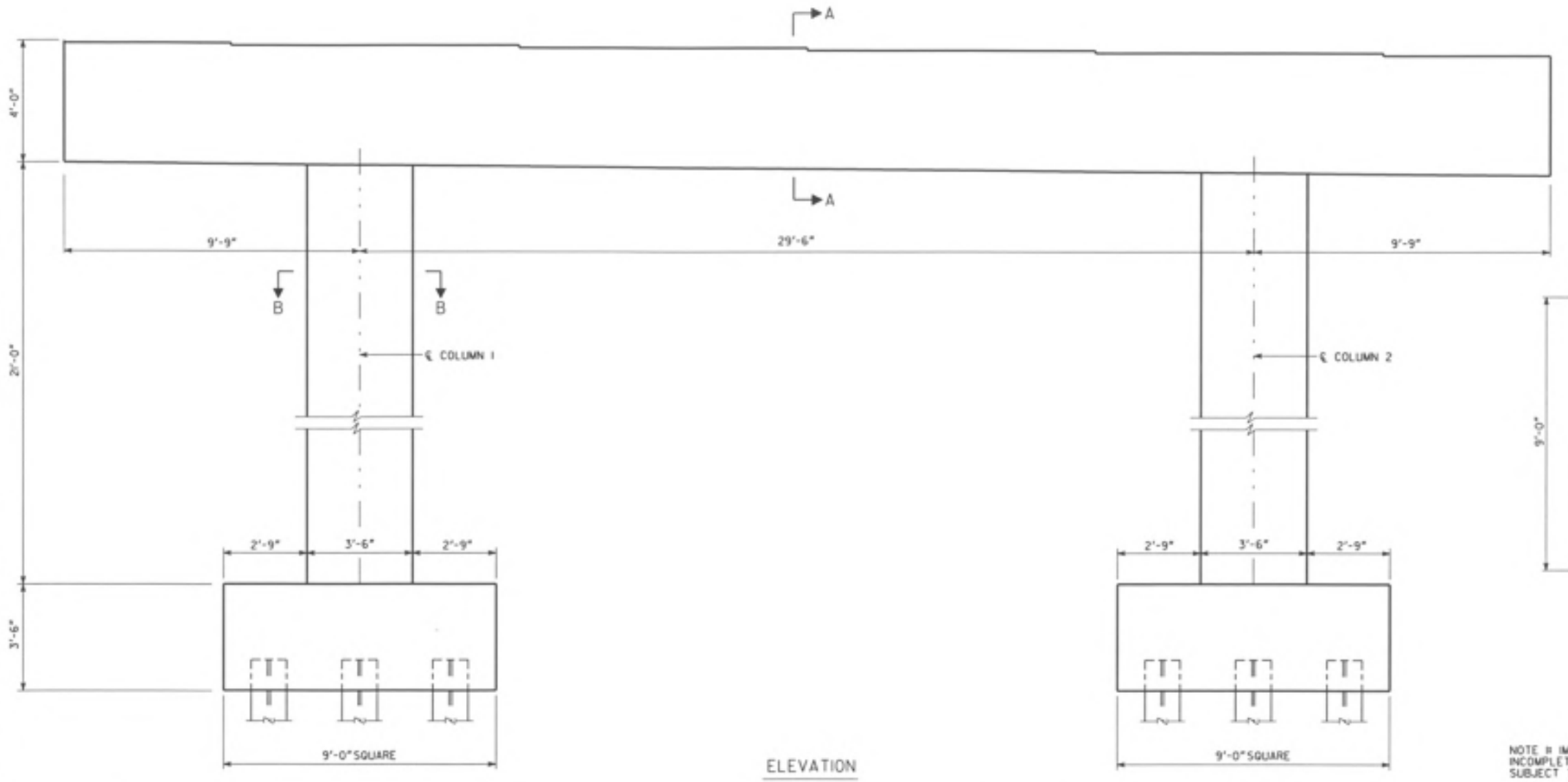

ELEVATION

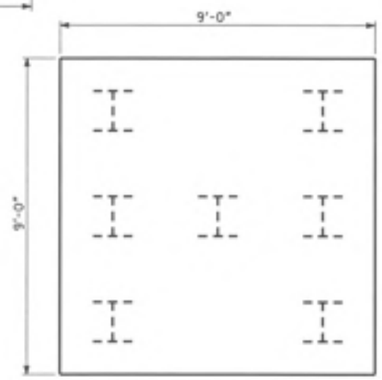

PILE LAYOUT

PLAN DRIVING OBJECTIVE

ALL PILES SHALL BE DRIVEN TO A DRIVING RESISTANCE OF 96 TONS AFTER A MINIMUM TIP ELEVATION OF XXX IS ACHIEVED.

ALL PILES SHALL BE STEEL H, HP 14 X 73

NOTE ⚠ IMPORTANT NOTICE! THIS DRAWING IS AN INCOMPLETE, WORK-IN-PROGRESS AND ITS USE IS SUBJECT TO NOTE 1 ON DRAWING NO. 1-01.

BRIDGE NO. 3!

ABBAS ESHAGHI-MEYBODI 11/20/09
DRAWN BY DATE
CHECKED BY DATE
SUPERVISOR DATE
APPROVED DATE

REVISIONS						
NO	DATE	DESCRIPTION	ORIG	CHKR	SUPV	APPR
A	6/30/09	Progress Drawings ISD 11 Revision 21	AEM	JCR	GLE	S.A.
B	9/25/09	SOIL SUBMISSION	AEM	JCR	GLE	S.A.
C	11/30/09	PLOTTED PER GDOT'S TERMINATION FOR CONVENIENCE DIRECTION	AEM			

GTP Georgia Transportation Partners

NORTHWEST I-75/I-575 CORRIDOR

DEPARTMENT OF TRANSPORTATION
STATE OF GEORGIA

JBT J.B. Trimble, Inc.
2550 Heritage Ct, SE Suite 250
Atlanta GA 30339-3062
(770) 952-1022

BRIDGE SHEET
9 OF 9

I-75 / I-575 NORTHWEST CORRIDOR

I-75 REVERSIBLE OVER NOONDAY CREEK

BENT 3 INFORMATION

COBB COUNTY NH000-0073-03(242)

DRAWING NO. 35-202

STATE	PROJECT NUMBER	SHEET NO.	TOTAL SHEETS
GA	NH000-0073-03(242)		

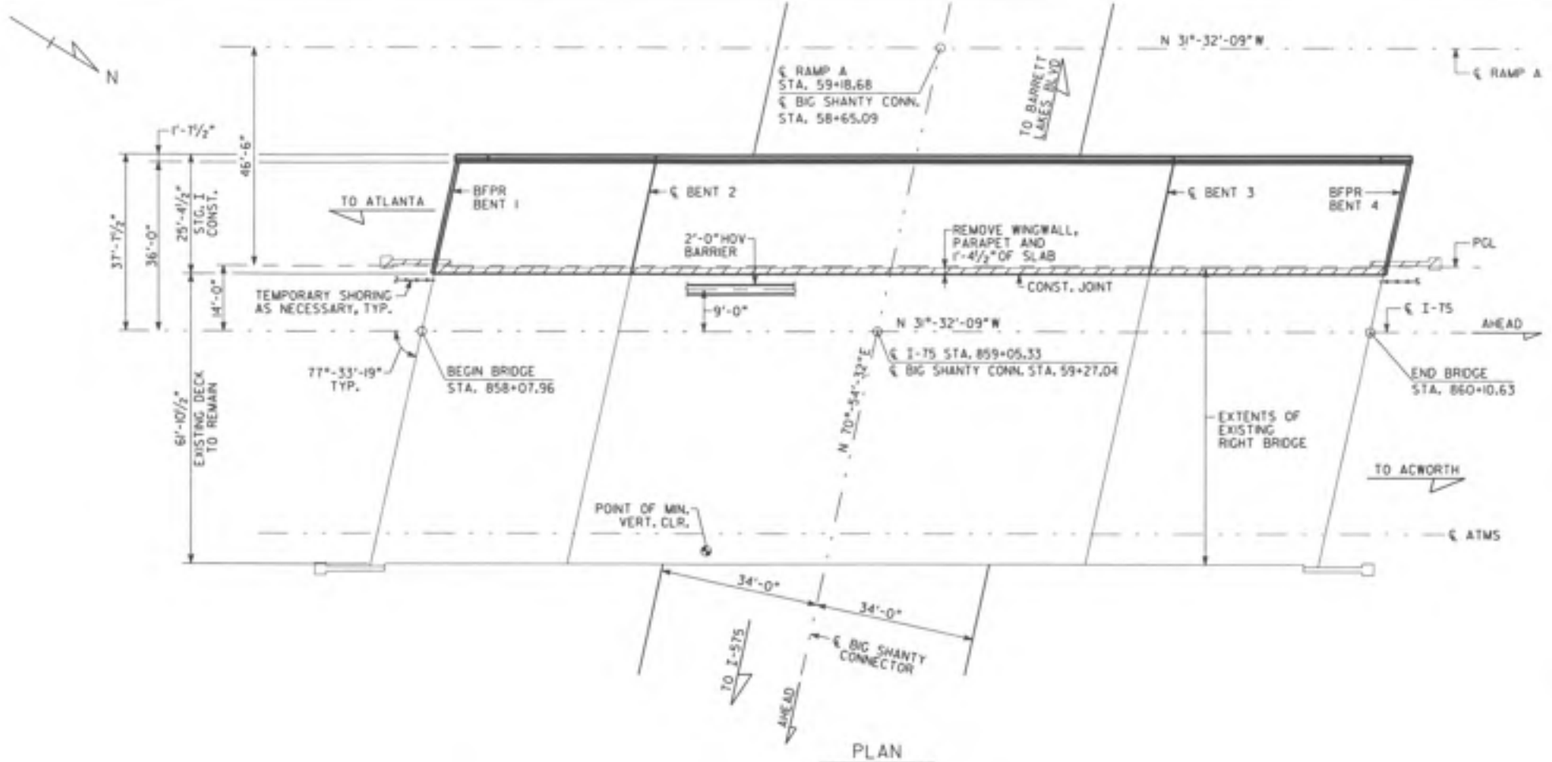

PLAN
SCALE: 1" = 15'-0"

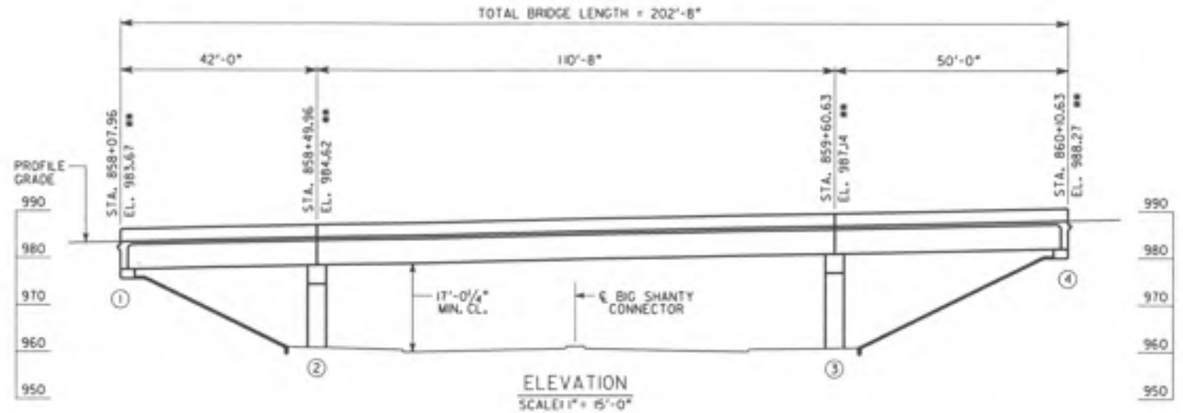

ELEVATION
SCALE: 1" = 15'-0"

BERM ELEVATIONS ⊛		
BENT	LEFT	RIGHT
1	975.94	975.52
4	980.29	979.87

⊛ NOTE: FOR BRIDGE ENDROLL STAKING PURPOSES ONLY.

NOTES:

1. * SLOPE NORMAL TO END BENTS.
2. ** STATIONS ARE ALONG ℄ I-75 AT THE INTERSECTION OF ℄ I-75 AND BFPR OR ℄ BENT. ELEVATIONS ARE ALONG PGL.
3. END BENT PILES NOT SHOWN.
4. THE PROPOSED BRIDGE DECK IS TO BE BUILT ON A CONSTANT CROSS SLOPE OF 2%, SLOPING DOWN TO THE RIGHT.

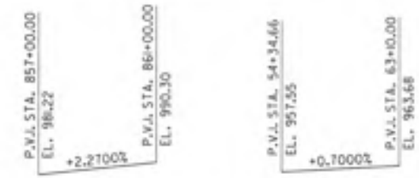

I-75 GRADE DATA

BIG SHANTY CONNECTOR GRADE DATA

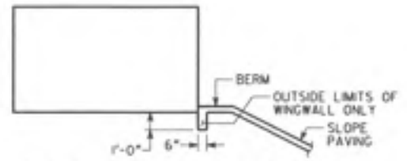

SLOPE PAVING DETAIL AT WINGS

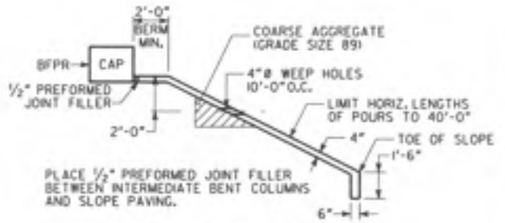

SLOPE PAVING DETAIL

DESIGN DATA

SPECIFICATIONS ---------- AASHTO 17TH EDITION, 2002
(DESIGNED FOR SEISMIC PERFORMANCE CATEGORY A)
TYPICAL HS20-44 AND/OR MILITARY LOADING --- IMPACT ALLOWED
FUTURE PAVING ALLOWANCE ---------- 30 LBS PER SQ FT

WIDENED BRIDGE CONSISTS OF

1 - 42'-0" BULB TEE, 63", PSC BEAM SPAN ----- SPECIAL DESIGN
1 - 110'-8" BULB TEE, 63", PSC BEAM SPAN ----- SPECIAL DESIGN
1 - 50'-0" BULB TEE, 63", PSC BEAM SPAN ----- SPECIAL DESIGN
2 - PILE END BENTS ---------- SPECIAL DESIGN
2 - CONCRETE INTERMEDIATE BENTS ---------- SPECIAL DESIGN

EXISTING UTILITIES

4- 4 INCH DIAMETER ATMS ----- GEORGIA DEPARTMENT OF TRANSPORTATION

PROJECT P.I. NO. 714130

BRIDGE NO. 32

ABBAS ESNAGER-MEYBODI	11/25/09	DATE
DRAWN BY		DATE
CHECKED BY		DATE
SUPERVISOR		DATE
APPROVED		DATE

REVISIONS						
NO	DATE	DESCRIPTION	DRG	CHKR	SUPV	APPR
A	6/30/09	Progress Drawings (50 % Revision 2)	AEM	JCR	GLE	SJL
B	9/25/09	50% SUBMISSION	AEM	JCR	GLE	SJL
C	11/30/09	PLOTTED PER GDOT'S TERMINATION FOR CONVENIENCE DIRECTION	AEM			

GTP Georgia Transportation Partners

NORTHWEST I-75/I-575 CORRIDOR

DEPARTMENT OF TRANSPORTATION
STATE OF GEORGIA

JBT J.B. Trimble, Inc.
2550 Heritage Ct, SE Suite 250
Atlanta GA 30339-3062
(770) 952-1022

BRIDGE SHEET 1 OF 5

I-75 / I-575 NORTHWEST CORRIDOR

I-75 REVERSIBLE OVER BIG SHANTY CONN

PLAN AND ELEVATION

COBB COUNTY NH000-0073-03(242)

DRAWING NO. 35-203

STATE	PROJECT NUMBER	SHEET NO.	TOTAL SHEETS
GA	NH000-0073-03(242)		

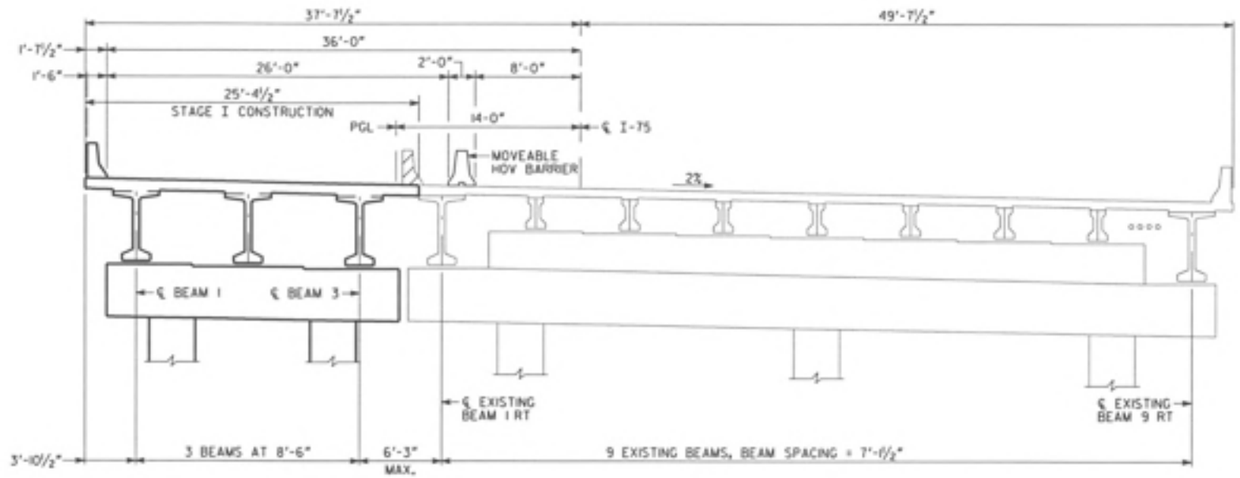

DECK SECTION
(LOOKING AHEAD, RIGHT BRIDGE)

CONSTRUCTION SEQUENCE

STAGE I:

1. PLACE TEMPORARY BARRIER, MAINTAIN THREE 12'-0" LANES OF TRAFFIC IN EACH DIRECTION ON EXISTING BRIDGES, MAINTAIN EXIT LANE ON EXISTING NB BRIDGE.
2. REMOVE PORTIONS OF EXISTING NORTH BOUND BRIDGE AS NECESSARY FOR STAGE I CONSTRUCTION.
3. CONSTRUCT STAGE I SUBSTRUCTURE.
4. CONSTRUCT STAGE I SUPERSTRUCTURE.

NOTE 1: IMPORTANT NOTICE: THIS DRAWING IS AN INCOMPLETE WORK-IN-PROGRESS AND ITS USE IS SUBJECT TO NOTE 1 ON DRAWING NO. 1-01.

BRIDGE NO. 32

ABBAS ESHAGHI-HEYDARI	11/20/09
DRAWN BY	DATE
CHECKED BY	DATE
SUPERVISOR	DATE
APPROVED	DATE

REVISIONS

NO	DATE	DESCRIPTION	DRIG	CHKR	SUPV	APPR
A	6/30/09	Progress Drawings ISO 11 Revision 21	REM	JCR	GLE	SJL
B	9/25/09	50% SUBMISSION	REM	JCR	GLE	SJL
C	11/30/09	PLOTTED PER COOT'S TERMination FOR CONVENIENCE DIRECTION	REM			

GTP Georgia Transportation Partners

NORTHWEST I-75/I-575 CORRIDOR

DEPARTMENT OF TRANSPORTATION
STATE OF GEORGIA

JBT J.B. Trimble, Inc.
2550 Heritage Ct, SE Suite 250
Atlanta GA 30339-3062
(770) 952-1022

BRIDGE SHEET
2 OF 5

I-75 / I-575 NORTHWEST CORRIDOR

I-75 REVERSIBLE OVER BIG SHANTY CONN
CONSTRUCTION SEQUENCE

COBB COUNTY NH000-0073-03(242)

DRAWING NO.
35-204

12/1/2009 10:48:36 AM n:\tra\2501\7\Pdw\dwgs\structure\BIG2\Preliminary\BigShanConn_CS.dgn

STATE	PROJECT NUMBER	SHEET NO.	TOTAL SHEETS
GA	NH000-0073-03(242)		

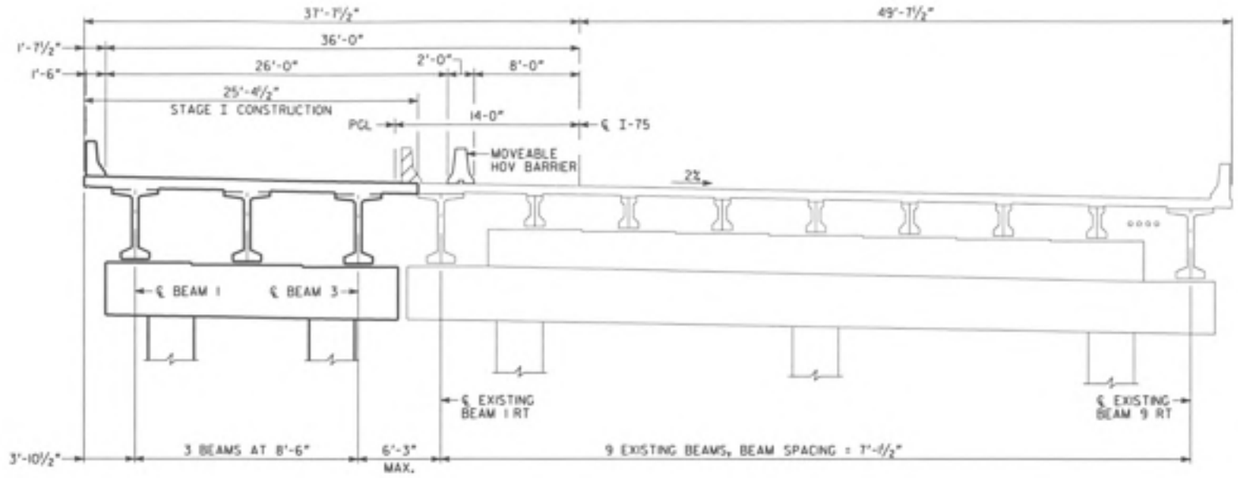

DECK SECTION
(LOOKING AHEAD, RIGHT BRIDGE)

SPAN	AVERAGE DECK WIDTH	BEAM TYPE	NUMBER OF BEAMS	BEAMS	SLAB THICKNESS	BEAMS SPACING	AVERAGE BEAM LENGTH	RELEASE CONCRETE STRENGTH (f'_{ci})	FINAL CONCRETE STRENGTH (f'_c)	STRAND TYPE	TOTAL NUMBER OF STRANDS	NUMBER OF RAISED STRANDS	HEIGHT OF RAISED STRANDS
1	25'-4½"	BULB-TEE 63"	3	1-3	8"	8'-6"	40'-7 15/16"	4,500 PSI	5,000 PSI	½" SPECIAL	12	0	0'-0"
2	25'-4½"	BULB-TEE 63"	3	1-3	8"	8'-6"	109'-9 15/16"	6,500 PSI	7,000 PSI	½" SPECIAL	52	20	1'-10½"
3	25'-4½"	BULB-TEE 63"	3	1-3	8"	8'-6"	48'-7 15/16"	4,500 PSI	5,000 PSI	½" SPECIAL	12	0	0'-0"

NOTES:

1. MAINTAIN 2" CLEARANCE ON ALL REINFORCEMENT UNLESS OTHERWISE NOTED.
2. CARE SHALL BE EXERCISED IN REMOVAL OF EXISTING CONCRETE AND RETAIN EXISTING REINFORCEMENT. EXISTING REINFORCEMENT BARS TO BE SPLICED A MINIMUM OF 2'-6". ANY EXISTING REINFORCEMENT STEEL DAMAGED DURING REMOVAL SHALL BE REPLACED BY THE CONTRACTOR AT NO ADDITIONAL COST.
3. NON-CONTACT LAPS MAY BE USED BETWEEN EXISTING AND NEW TRANSVERSE DECK BARS.

NOTE ℞ IMPORTANT NOTICE: THIS DRAWING IS AN INCOMPLETE WORK-IN-PROGRESS AND ITS USE IS SUBJECT TO NOTE 1 ON DRAWING NO. 1-01.

BRIDGE NO. 32

ABBAS ESHAGHI-HEYDARI	11/20/09
DRAWN BY	DATE
CHECKED BY	DATE
SUPERVISOR	DATE
APPROVED	DATE

REVISIONS						
NO	DATE	DESCRIPTION	ORIG	CHKR	SUPV	APPR
A	6/30/09	Progress Drawings (SD 11 Revision 2)	AEM	JCR	GLE	SJL
B	9/25/09	SDG SUBMISSION	AEM	JCR	GLE	SJL
C	11/30/09	PLOTTED PER GDOT'S TERMINATION FOR CONVENIENCE DIRECTION	AEM			

GTP Georgia Transportation Partners

NORTHWEST I-75/I-575 CORRIDOR

DEPARTMENT OF TRANSPORTATION
STATE OF GEORGIA

JBT J.B. Trimble, Inc.
2550 Heritage Ct, SE Suite 250
Atlanta GA 30339-3062
(770) 952-1022

BRIDGE SHEET 3 OF 5

I-75 / I-575 NORTHWEST CORRIDOR

I-75 REVERSIBLE OVER BIG SHANTY CONN
DECK SECTION

COBB COUNTY NH000-0073-03(242)

DRAWING NO. 35-205

STATE	PROJECT NUMBER	SHEET NO.	TOTAL SHEETS
GA	NH000-0073-03(242)		

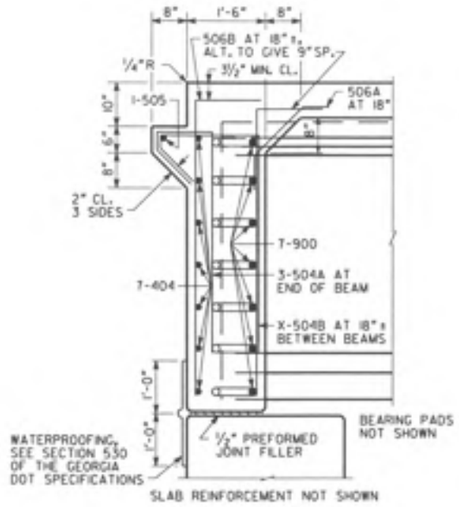

SLAB REINFORCEMENT NOT SHOWN

SECTION AT ENDWALL

(BENTS 1 & 4)

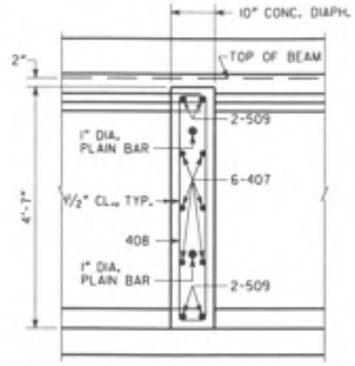

SLAB REINFORCEMENT NOT SHOWN

SECTION THRU DIAPHRAGM

(ALL SPANS)

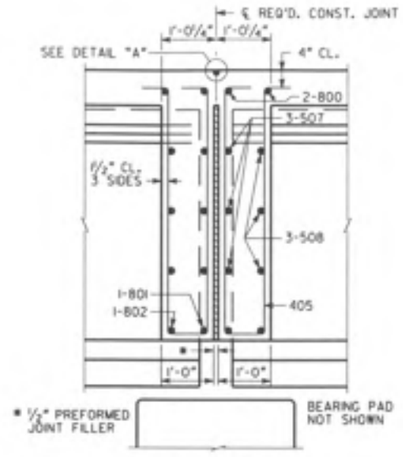

SLAB REINFORCEMENT NOT SHOWN

SECTION THRU EDGE BEAM

(BENTS 2 & 3)

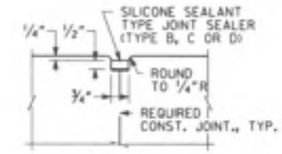

DETAIL "A"

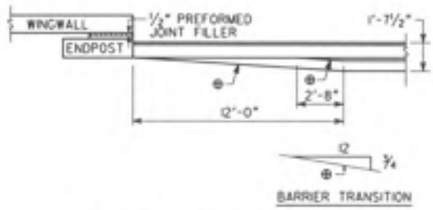

BARRIER TRANSITION DETAIL

* TAPERS TO 0" AT END POST.

** AT CONTRACTOR'S OPTION, REPLACE 10" RADIUS WITH STRAIGHT INTERSECTING SLOPES.

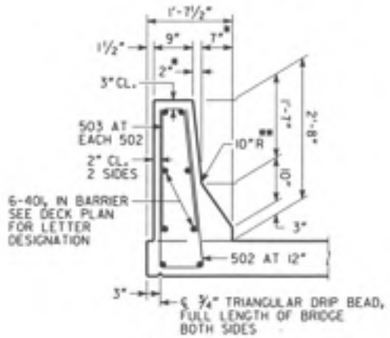

BARRIER DETAIL

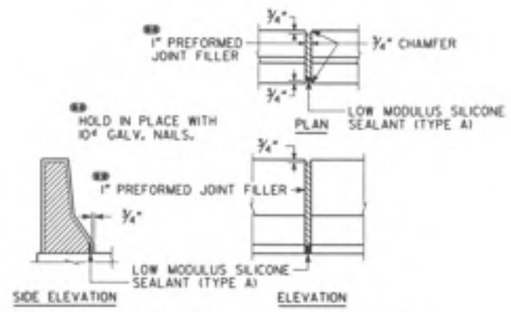

DETAILS OF 1" EXPANSION JOINT IN BARRIER

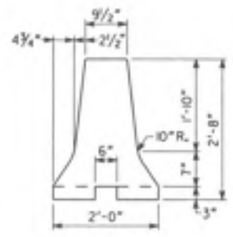

HOV BARRIER DETAIL

NOTE = IMPORTANT NOTICE: THIS DRAWING IS AN INCOMPLETE WORK-IN-PROGRESS AND ITS USE IS SUBJECT TO NOTE 1 ON DRAWING NO. 1-01.

BRIDGE NO. 32

ABBAS ESHAGIEH-HEYBOOD	11/20/09
DRAWN BY	DATE
CHECKED BY	DATE
SUPERVISOR	DATE
APPROVED	DATE

REVISIONS

NO	DATE	DESCRIPTION	ORIG	CHKR	SUPV	APPR
A	6/30/09	Progress Drawings (50 % Revision 2)	AEM	JCR	GLE	SJL
B	9/25/09	50% SUBMISSION	AEM	JCR	GLE	SJL
C	11/30/09	PLOTTED PER GDOT'S TERMINATION FOR CONVENIENCE DIRECTION	AEM			

GTP Georgia Transportation Partners

NORTHWEST I-75/I-575 CORRIDOR

DEPARTMENT OF TRANSPORTATION
STATE OF GEORGIA

JBT J.B. Trimble, Inc.
2550 Heritage Ct, SE Suite 250
Atlanta GA 30339-3062
(770) 952-1022

BRIDGE SHEET 4 OF 5

I-75 / I-575 NORTHWEST CORRIDOR

I-75 REVERSIBLE OVER BIG SHANTY CONN

MISCELLANEOUS DETAILS

COBB COUNTY NH000-0073-03(242)

DRAWING NO. 35-206

STATE	PROJECT NUMBER	SHEET NO.	TOTAL SHEETS
GA	NH000-0073-03(242)		

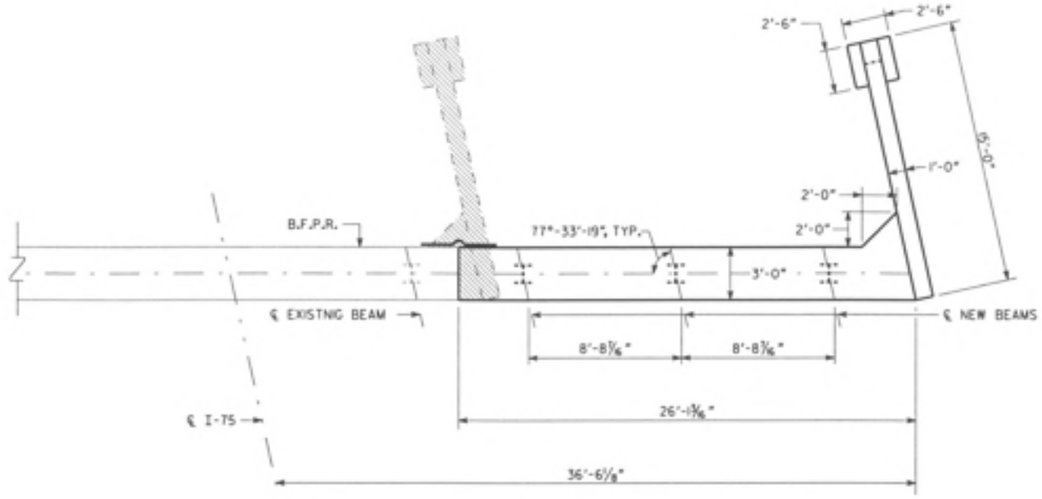

PLAN

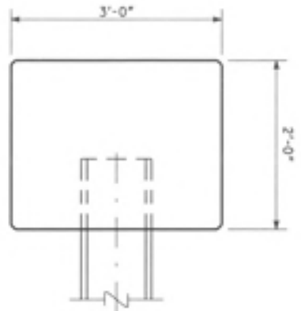

SECTION A-A
NO SCALE

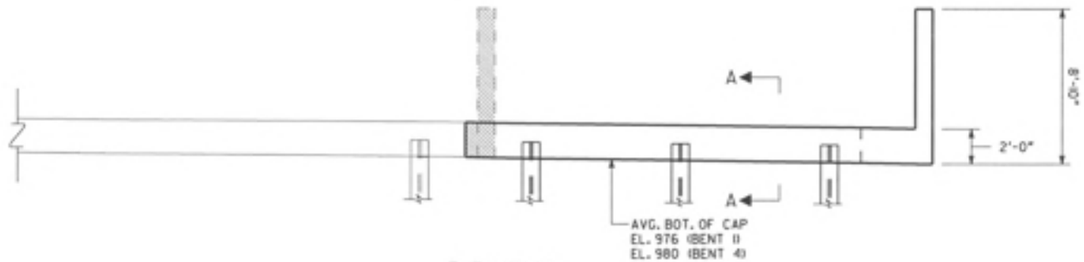

ELEVATION
BENT 1 LOOKING BACK
(BENT 4 SIMILAR)

NOTE:
1. MAINTAIN 2" CL. ON ALL REINFORCEMENT UNLESS OTHERWISE NOTED.

PLAN DRIVING OBJECTIVE

ALL PILES SHALL BE DRIVEN TO A DRIVING RESISTANCE OF 68 TONS AFTER AN ESTIMATED TIP ELEVATION SHOWN BELOW IS ACHIEVED

BENT	EST. TIP
1	XXX
4	XXX

ALL PILES SHALL BE STEEL H, HP 12 X 53

NOTE ⊗ IMPORTANT NOTICE: THIS DRAWING IS AN INCOMPLETE WORK-IN-PROGRESS AND ITS USE IS SUBJECT TO NOTE 1 ON DRAWING NO. 1-01.

BRIDGE NO. 32

ABBAS ESHAGH-HEYDARI 11/20/09
DRAWN BY DATE
CHECKED BY DATE
SUPERVISOR DATE
APPROVED DATE

REVISIONS

NO	DATE	DESCRIPTION	DRG	CHKR	SUPV	APPR
A	6/30/09	Progress Drawings ISO 11 Revision 21	AEM	JCR	GLE	SJL
B	9/25/09	SOL SUBMISSION	AEM	JCR	GLE	SJL
C	11/30/09	PLOTTED PER GDOT'S TERMINATION FOR CONVENIENCE DIRECTION	AEM			

GTP Georgia Transportation Partners

NORTHWEST I-75/I-575 CORRIDOR

DEPARTMENT OF TRANSPORTATION
STATE OF GEORGIA

JBT J.B. Trimble, Inc.
2550 Heritage Ct, SE Suite 250
Atlanta GA 30339-3062
(770) 952-1022

BRIDGE SHEET
5 OF 5

I-75 / I-575 NORTHWEST CORRIDOR

I-75 REVERSIBLE OVER BIG SHANTY CONN
END BENTS

COBB COUNTY NH000-0073-03(242)

DRAWING NO.
35-207

STATE	PROJECT NUMBER	SHEET NO.	TOTAL SHEETS
GA	NH000-0073-03(242)		

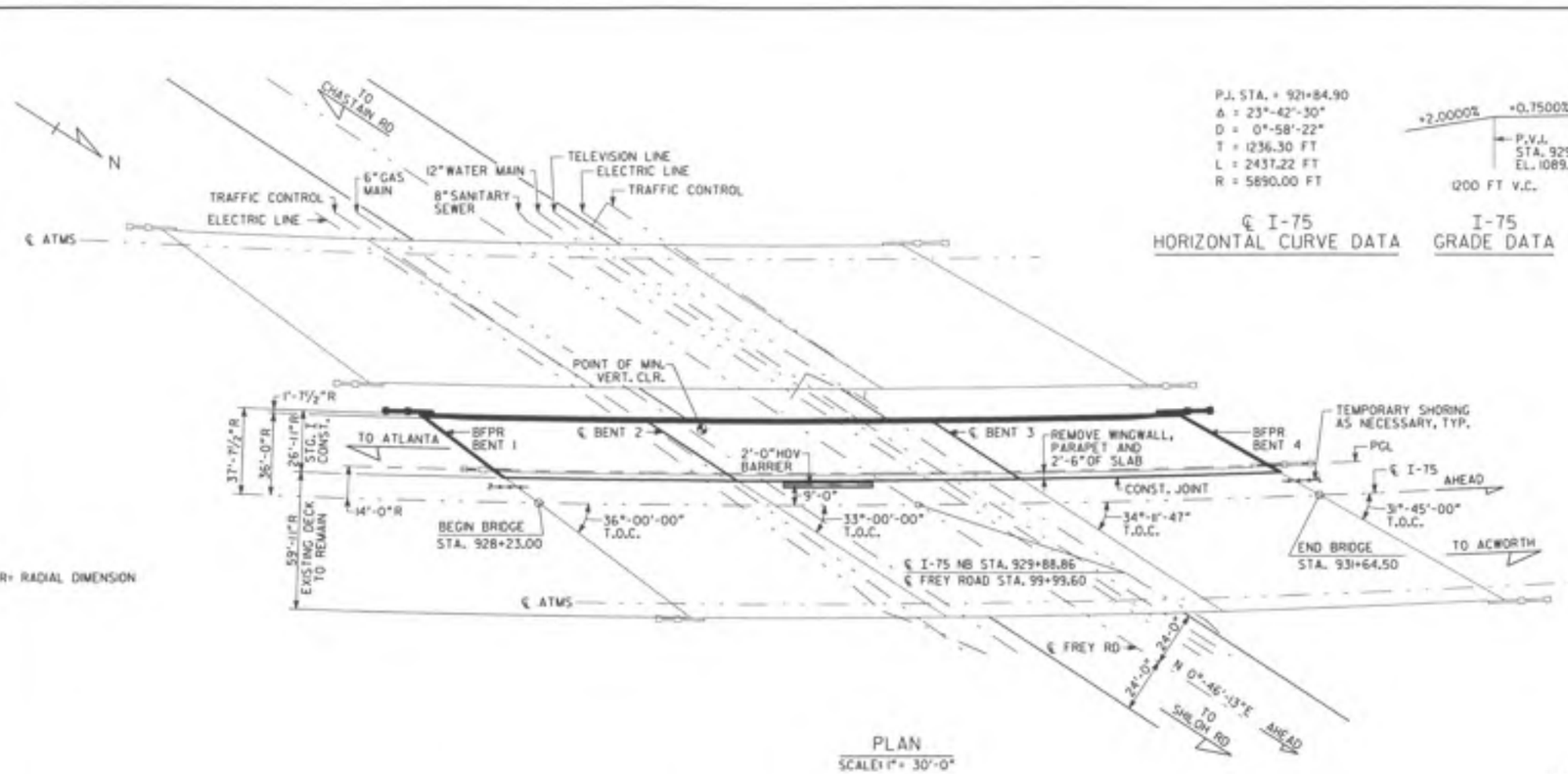

R= RADIAL DIMENSION

PLAN
SCALE: 1" = 30'-0"

P.I. STA. = 921+84.90
Δ = 23°-42'-30"
D = 0°-58'-22"
T = 1236.30 FT
L = 2437.22 FT
R = 5890.00 FT

℄ I-75
HORIZONTAL CURVE DATA

I-75
GRADE DATA

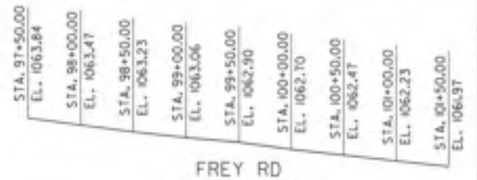

FREY RD
GRADE DATA

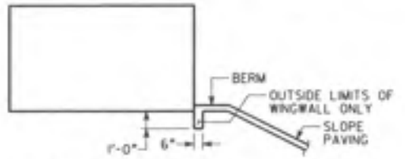

SLOPE PAVING DETAIL AT WINGS

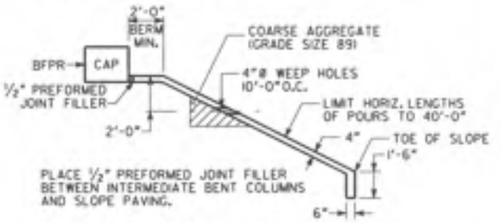

SLOPE PAVING DETAIL

DESIGN DATA

SPECIFICATIONS ---------- AASHTO 17TH EDITION, 2002
(DESIGNED FOR SEISMIC PERFORMANCE CATEGORY A)
TYPICAL HS20-44 AND/OR MILITARY LOADING --- IMPACT ALLOWED
FUTURE PAVING ALLOWANCE ---------- 30 LBS PER SQ FT

WIDENED BRIDGE CONSISTS OF

1 - 103'-6" PLATE GIRDER SPAN ---------- SPECIAL DESIGN
1 - 123'-0" PLATE GIRDER SPAN ---------- SPECIAL DESIGN
1 - 115'-0" PLATE GIRDER SPAN ---------- SPECIAL DESIGN
2 - PILE END BENTS ---------- SPECIAL DESIGN
2 - CONCRETE INTERMEDIATE BENTS ---------- SPECIAL DESIGN

EXISTING UTILITIES ON BRIDGE

8 - 4 INCH DIAMETER ATMS ----- GEORGIA DEPARTMENT OF TRANSPORTATION

EXISTING UTILITIES UNDER THE BRIDGE

6 INCH DIAMETER GAS MAIN
8 INCH DIAMETER SANITARY SEWER
12 INCH DIAMETER WATER MAIN
TELEVISION LINE
ELECTRIC LINE
TRAFFIC CONTROLS

EXISTING RIGHT BRIDGE SERIAL NO. 067-0085-0
EXISTING RIGHT BRIDGE I.D. NO. 067-00400-27L97N
PROJECT P.I. NO. 714130

BERM ELEVATIONS (*)		
BENT	LEFT	RIGHT
1	1077.72	1078.83
4	1082.04	1083.20

(*) NOTE: FOR BRIDGE ENDROLL STAKING PURPOSES ONLY.

NOTES:

1. ● SLOPE NORMAL TO END BENTS.
2. ●● STATIONS ARE ALONG ℄ I-75 AT THE INTERSECTION OF ℄ I-75 AND BFPR OR ℄ BENT. ELEVATIONS ARE ALONG ℄ PGL.
3. END BENT PILES NOT SHOWN.
4. THE PROPOSED BRIDGE DECK IS TO BE BUILT ON A CONSTANT CROSS SLOPE OF 3%, SLOPING DOWN TO THE LEFT.

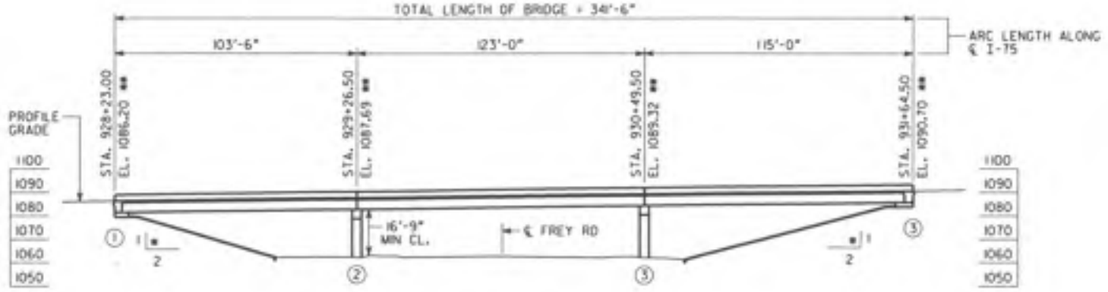

ELEVATION
SCALE: 1" = 30'-0"

BRIDGE NO. 33

ABBAS ESHAGHI-METROD	11/20/09
DRAWN BY	DATE
CHECKED BY	DATE
SUPERVISOR	DATE
APPROVED	DATE

REVISIONS

NO.	DATE	DESCRIPTION	ORIG	CHKR	SUPV	APPR
A	4/30/09	Progress Drawings (50 % Review 2)	AEM	JCR	GLE	S.A.
B	9/25/09	SOIL SUBMISSION	AEM	JCR	GLE	S.A.
C	11/30/09	PLOTTED PER GDOT'S TERMINATION FOR CONVENIENCE DIRECTION	AEM			

GTP Georgia Transportation Partners

NORTHWEST I-75/I-575 CORRIDOR

DEPARTMENT OF TRANSPORTATION
STATE OF GEORGIA

JBT J.B. Trimble, Inc.
2550 Heritage Ct, SE Suite 250
Atlanta GA 30339-3062
(770) 952-1022

BRIDGE SHEET
1 OF 8

I-75 / I-575 NORTHWEST CORRIDOR

I-75 REVERSIBLE OVER FREY RD
PLAN AND ELEVATION

COBB COUNTY NH000-0073-03(242)

DRAWING NO. 35-208

STATE	PROJECT NUMBER	SHEET NO.	TOTAL SHEETS
GA	NH000-0073-03(242)		

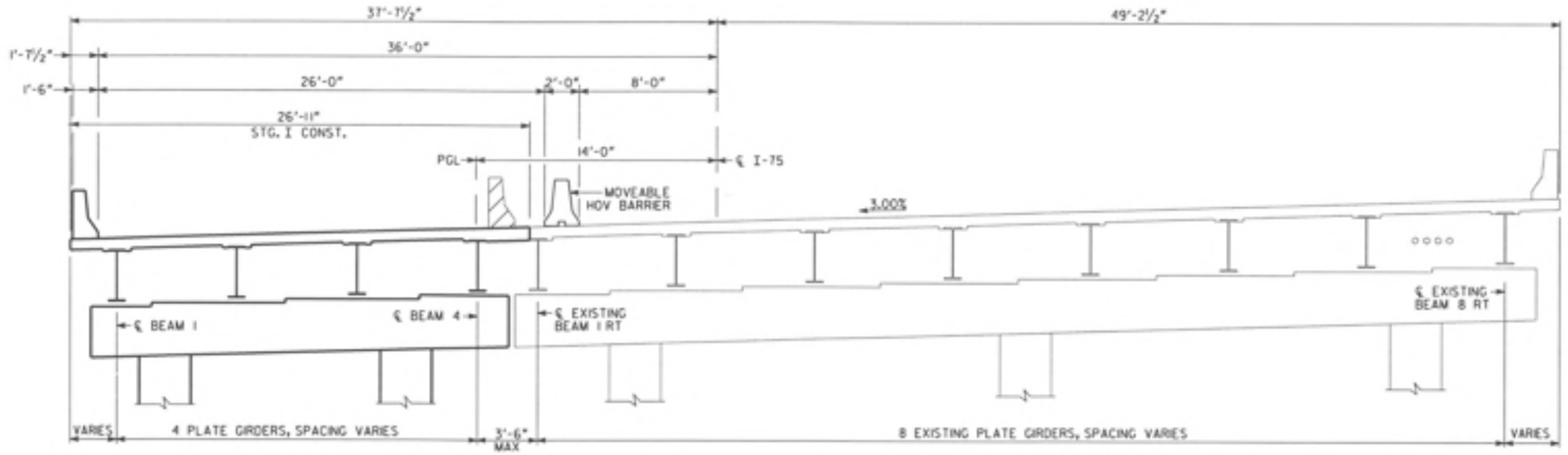

DECK SECTION
(LOOKING AHEAD, RIGHT BRIDGE)

CONSTRUCTION SEQUENCE

STAGE I:

1. PLACE TEMPORARY BARRIER, MAINTAIN THREE 12'-0" LANES OF TRAFFIC IN EACH DIRECTION ON EXISTING NB BRIDGE.
2. REMOVE PORTIONS OF EXISTING NORTH BOUND BRIDGE AS NECESSARY FOR STAGE I CONSTRUCTION.
3. CONSTRUCT STAGE I SUBSTRUCTURE.
4. CONSTRUCT STAGE I SUPERSTRUCTURE.

NOTE II IMPORTANT NOTICE: THIS DRAWING IS AN INCOMPLETE WORK-IN-PROGRESS AND ITS USE IS SUBJECT TO NOTE 1 ON DRAWING NO. 1-01.

BRIDGE NO. 33

ABBAS ESHAGEH-MEYBODI	11/20/09
DRAWN BY	DATE
CHECKED BY	DATE
SUPERVISOR	DATE
APPROVED	DATE

REVISIONS

NO	DATE	DESCRIPTION	ORIG	CHKR	SUPV	APPR
A	6/30/09	Progress Drawings (50 11 Revision 2)	AEM	JCR	GLE	SJL
B	9/25/09	SOIL SUBMISSION	AEM	JCR	GLE	SJL
C	11/30/09	PLOTTED PER GDOT'S TERMINATION FOR CONVENIENCE DIRECTION	AEM			

GTP Georgia Transportation Partners

NORTHWEST I-75/I-575 CORRIDOR

DEPARTMENT OF TRANSPORTATION
STATE OF GEORGIA

JBT J.B. Trimble, Inc.
2550 Heritage Ct, SE Suite 250
Atlanta GA 30339-3062
(770) 952-1022

BRIDGE SHEET
2 OF 8

I-75 / I-575 NORTHWEST CORRIDOR

I-75 REVERSIBLE OVER FREY RD
CONSTRUCTION SEQUENCE

COBB COUNTY NH000-0073-03(242)

DRAWING NO. 35-209

STATE	PROJECT NUMBER	SHEET NO.	TOTAL SHEETS
GA	NH000-0073-03(242)		

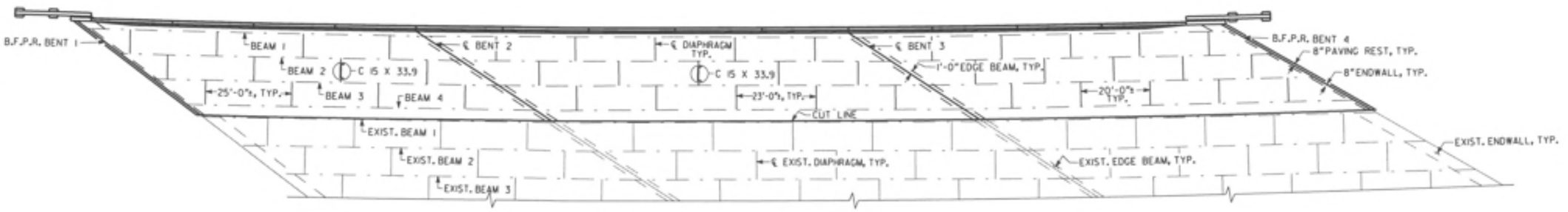

PLAN
SCALE: 1" = 15'-0"

NOTE II IMPORTANT NOTICE: THIS DRAWING IS AN INCOMPLETE WORK-IN-PROGRESS AND ITS USE IS SUBJECT TO NOTE I ON DRAWING NO. I-01.

BRIDGE NO. 33

ABBAS ESHAGIEH-HEYBOOD	11/20/09
DRAWN BY	DATE
CHECKED BY	DATE
SUPERVISOR	DATE
APPROVED	DATE

REVISIONS

NO	DATE	DESCRIPTION	ORIG	CHKR	SUPV	APPR
A	6/30/09	Progress Drawings (50 11 Revision 2)	AEM	JCR	GLE	SJL
B	9/25/09	50% SUBMISSION	AEM	JCR	GLE	SJL
C	11/30/09	PLOTTED PER GDOT'S TERMINATION FOR CONVENIENCE DIRECTION	AEM			

GTP Georgia Transportation Partners

NORTHWEST I-75/I-575 CORRIDOR

DEPARTMENT OF TRANSPORTATION
STATE OF GEORGIA

JBT J.B. Trimble, Inc.
2550 Heritage Ct, SE Suite 250
Atlanta GA 30339-3062
(770) 952-1022

BRIDGE SHEET
3 OF 8

I-75 / I-575 NORTHWEST CORRIDOR

I-75 REVERSIBLE OVER FREY RD
DECK PLAN

COBB COUNTY NH000-0073-03(242)

DRAWING NO. 35-210

STATE	PROJECT NUMBER	SHEET NO.	TOTAL SHEETS
GA	NH000-0073-03(242)		

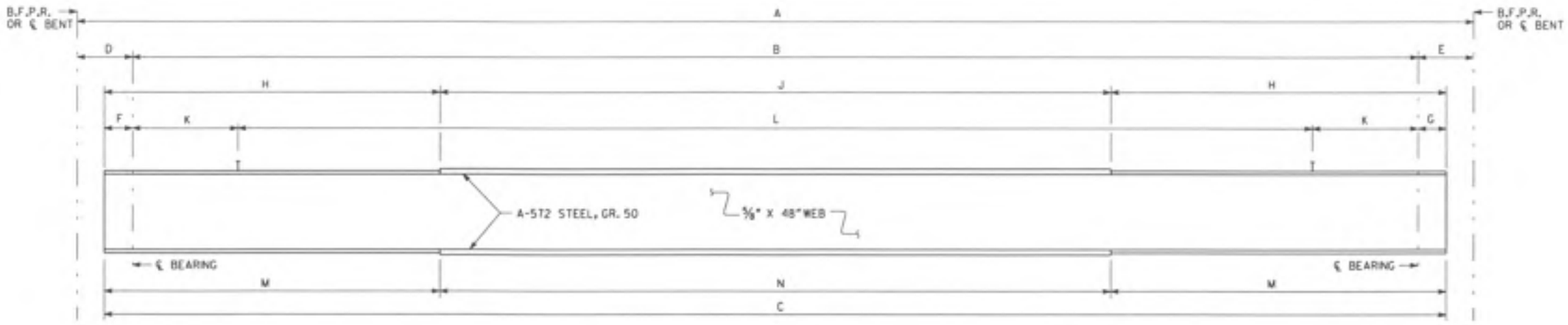

TABLE OF DIMENSIONS

SPAN	BEAM	A	B	C	D	E	F	G	H	J	K	L	M	N
1	1	96'-5"	91'-10"	95'-1⅜"	3'-6"	1'-1"	2'-6⅝"	9"	22'-6⅝" (12" X ¾"℄)	50'-0" (12" X ¾"℄)	25 SPS. @ 11"	43 SPS. @ 14"±	22'-6⅝" (12" X 1⅜"℄)	50'-0" (12" X 2"℄)
	2	97'-2½"	92'-7½"	95'-11⅞"	3'-6"	1'-1"	2'-6⅝"	9"	22'-11⅜" (12" X ¾"℄)	50'-0" (12" X ¾"℄)	25 SPS. @ 11"	43 SPS. @ 14"±	22'-11⅜" (12" X 1⅜"℄)	50'-0" (12" X 2"℄)
	3	98'-9¾"	94'-2¾"	97'-6⅜"	3'-6"	1'-1"	2'-6⅝"	9"	23'-9⅜" (12" X ¾"℄)	50'-0" (12" X ¾"℄)	25 SPS. @ 11"	43 SPS. @ 14"±	23'-9⅜" (12" X 1⅜"℄)	50'-0" (12" X 2"℄)
	4	99'-7¼"	95'-0¼"	98'-3⅞"	3'-6"	1'-1"	2'-6⅝"	9"	24'-1⅝" (12" X ¾"℄)	50'-0" (12" X ¾"℄)	25 SPS. @ 11"	43 SPS. @ 14"±	24'-1⅝" (12" X 1⅜"℄)	50'-0" (12" X 2"℄)
2	1	122'-5⅞"	120'-3⅞"	121'-9⅝"	1'-1"	1'-1"	9"	9"	30'-10⅝" (13½" X 1⅜"℄)	60'-0" (13½" X 2"℄)	28 SPS. @ 12"	48 SPS. @ 16"±	30'-10⅝" (18½" X 1⅜"℄)	60'-0" (18½" X 2"℄)
	2	122'-1⅜"	119'-11⅜"	121'-5⅜"	1'-1"	1'-1"	9"	9"	30'-8⅝" (13½" X 1⅜"℄)	60'-0" (13½" X 2"℄)	28 SPS. @ 12"	48 SPS. @ 16"±	30'-8⅝" (18½" X 1⅜"℄)	60'-0" (18½" X 2"℄)
	3	121'-4⅜"	119'-2⅜"	120'-8⅝"	1'-1"	1'-1"	9"	9"	30'-4⅜" (13½" X 1⅜"℄)	60'-0" (13½" X 2"℄)	28 SPS. @ 12"	48 SPS. @ 16"±	30'-4⅜" (18½" X 1⅜"℄)	60'-0" (18½" X 2"℄)
	4	120'-11⅞"	118'-9⅞"	120'-3⅝"	1'-1"	1'-1"	9"	9"	30'-1⅝" (13½" X 1⅜"℄)	60'-0" (13½" X 2"℄)	28 SPS. @ 12"	48 SPS. @ 16"±	30'-1⅝" (18½" X 1⅜"℄)	60'-0" (18½" X 2"℄)
3	1	109'-6¾"	103'-10¾"	106'-9½"	1'-1"	4'-7"	9"	2'-1¾"	25'-10¾" (14" X 1"℄)	55'-0" (12" X 1½"℄)	26 SPS. @ 12"	41 SPS. @ 16"±	25'-10¾" (14" X 1⅜"℄)	55'-0" (14" X 2"℄)
	2	110'-0⅜"	104'-4⅜"	107'-3⅝"	1'-1"	4'-7"	9"	2'-1¾"	26'-1⅛" (12" X 1"℄)	55'-0" (12" X 1½"℄)	26 SPS. @ 12"	41 SPS. @ 16"±	26'-1⅛" (14" X 1⅜"℄)	55'-0" (14" X 2"℄)
	3	111'-1⅛"	105'-5⅛"	108'-3⅜"	1'-1"	4'-7"	9"	2'-1¾"	26'-7⅝" (12" X 1"℄)	55'-0" (12" X 1½"℄)	26 SPS. @ 12"	41 SPS. @ 16"±	26'-7⅝" (14" X 1⅜"℄)	55'-0" (14" X 2"℄)
	4	111'-7¼"	105'-11¼"	108'-10"	1'-1"	4'-7"	9"	2'-1¾"	26'-11" (12" X 1"℄)	55'-0" (12" X 1½"℄)	26 SPS. @ 12"	41 SPS. @ 16"±	26'-11" (14" X 1⅜"℄)	55'-0" (14" X 2"℄)

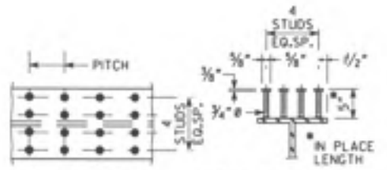

PLAN OF BEAM SECTION OF BEAM

STUD SHEAR CONNECTOR SHALL BE FULLY BUTT WELDED TO TOP FLANGE OF BEAM.

STUD SHEAR CONNECTOR DETAIL

NOTE ⊗ IMPORTANT NOTICE! THIS DRAWING IS AN INCOMPLETE WORK-IN-PROGRESS AND ITS USE IS SUBJECT TO NOTE 1 ON DRAWING NO. 1-01.

BRIDGE NO. 33

		DATE
ARDIS ENGESETH-HEYBOER	Drawn By	11/20/09
	CHECKED BY	DATE
	SUPERVISOR	DATE
	APPROVED	DATE

REVISIONS						
NO.	DATE	DESCRIPTION	DRG	CHKR	SUPV	APPR
A	6/30/09	Progress Drawings ISO 11 Revision 21	AEM	JCR	GLE	SJL
B	9/25/09	SOIL SUBMISSION	AEM	JCR	GLE	SJL
C	11/30/09	PLOTTED PER GDOT'S TERMINATION FOR CONVENIENCE DIRECTION	AEM			

GTP Georgia Transportation Partners

NORTHWEST I-75/I-575 CORRIDOR

DEPARTMENT OF TRANSPORTATION
STATE OF GEORGIA

JBT J.B. Trimble, Inc.
2550 Heritage Ct, SE Suite 250
Atlanta GA 30339-3062
(770) 952-1022

BRIDGE SHEET 4 OF 8

I-75 / I-575 NORTHWEST CORRIDOR

I-75 REVERSIBLE OVER FREY RD

BEAM INFORMATION

COBB COUNTY NH000-0073-03(242)

DRAWING NO. 35-211

n:\ta\2551\Drawings\Iso\Iso 33\preliminary\Frey BM.dgn 12/1/2009 11:58:36 AM

STATE	PROJECT NUMBER	SHEET NO.	TOTAL SHEETS
GA	NH000-0073-03(242)		

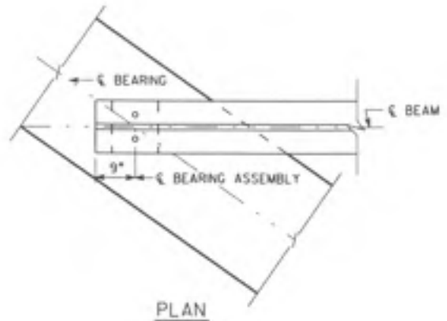

PLAN
BENTS 1 & 4

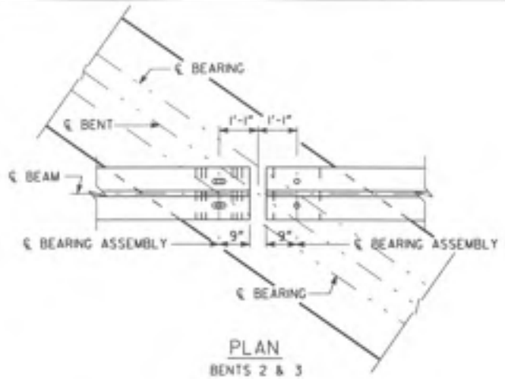

PLAN
BENTS 2 & 3

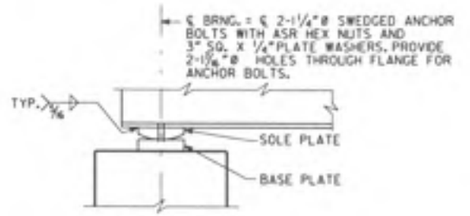

ELEVATION
BENTS 1 & 4

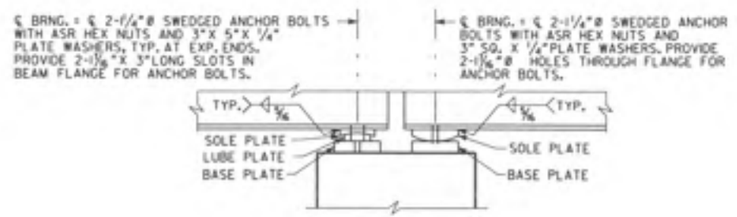

ELEVATION
BENTS 2 & 3

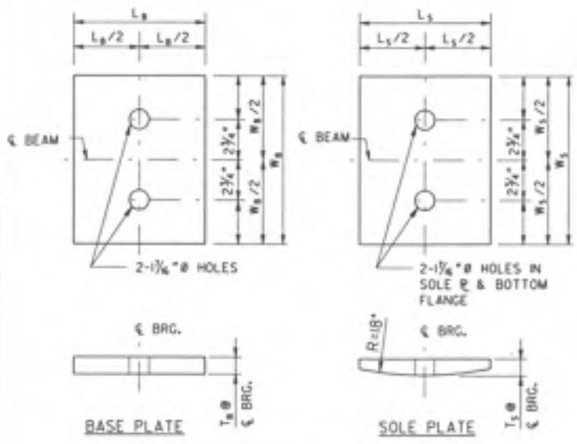

TYPICAL FIXED BEARING ASSEMBLY
BENTS 1,2 AH & 3 AH

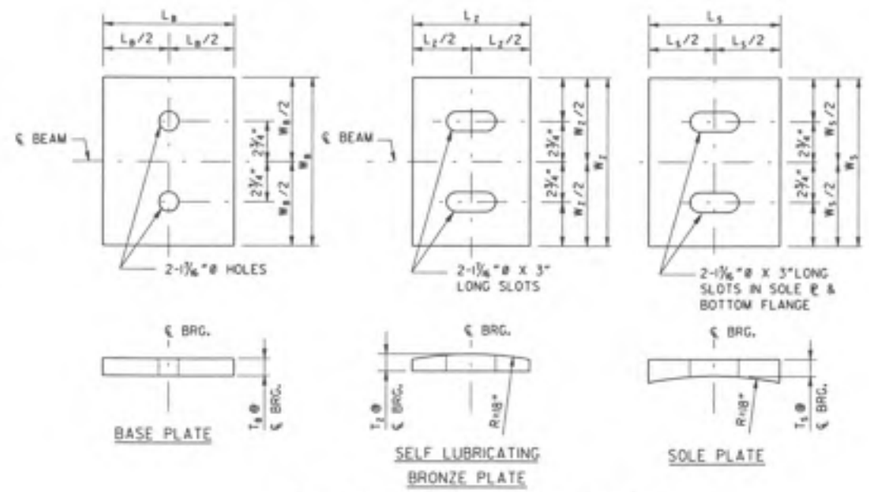

TYPICAL EXPANSION BEARING ASSEMBLY
BENTS 2 BK, 3 BK & 4

NOTES:

1. ALL BEARING ASSEMBLY COMPONENTS SHALL BE ASTM A709 GRADE 36 STEEL.
2. SELF-LUBRICATING PLATES SHALL BE CAST BRONZE.
3. ANCHOR BOLTS, ASR HEX NUTS AND PLATE WASHERS SHALL BE ASTM A276 TYPE 304 STAINLESS STEEL. PROVIDE 2½" MIN. PROJECTION OF ANCHOR BOLT ABOVE TOP OF BEAM FLANGE. SET ANCHOR BOLTS 12" INTO CAP.

BEARING ASSEMBLY DIMENSIONS (IN.)

BENT LOCATION	BEARING TYPE	BASE PLATE			SOLE PLATE			BRONZE PLATE			TOTAL BEARING DEPTH
		W_B	L_B	T_B	W_S	L_S	T_S	W_Z	L_Z	T_Z	
BENT 1	FIXED	12.00	14.75	2.50	12.0	14.75	2.00	-	-	-	4.50
BENT 2 BK	EXPANSION	12.00	12.00	1.00	12.0	9.00	1.50	12.0	7.0	1.0	3.50
BENT 2 AH	FIXED	18.50	8.75	1.75	18.5	8.75	3.00	-	-	-	4.75
BENT 3 BK	EXPANSION	18.50	10.00	1.25	18.5	10.0	2.25	12.0	8.0	1.25	4.75
BENT 3 AH	FIXED	14.00	10.50	2.25	14.0	10.50	2.25	-	-	-	4.50
BENT 4	EXPANSION	14.00	10.50	1.00	14.0	9.00	1.75	12.0	7.0	1.0	3.75

NOTE ⊞ IMPORTANT NOTICE: THIS DRAWING IS AN INCOMPLETE WORK-IN-PROGRESS AND ITS USE IS SUBJECT TO NOTE 1 ON DRAWING NO. 1-01.

BRIDGE NO. 33

ARMIS ENGINEERING	11/20/09
DRAWN BY	DATE
CHECKED BY	DATE
SUPERVISOR	DATE
APPROVED	DATE

REVISIONS

NO	DATE	DESCRIPTION	DRG	CHKR	SUPV	APPR
A	6/30/09	Progress Drawings (50 % Revision 2)	AEM	JCR	GLE	SJL
B	9/25/09	90% SUBMISSION	AEM	JCR	GLE	SJL
C	11/30/09	PLOTTED PER COOT'S TERMINATION FOR CONVENIENCE DIRECTION	AEM			

GTP Georgia Transportation Partners

NORTHWEST I-75/I-575 CORRIDOR

DEPARTMENT OF TRANSPORTATION
STATE OF GEORGIA

JBT J.B. Trimble, Inc.
2550 Heritage Ct, SE Suite 250
Atlanta GA 30339-3062
(770) 952-1022

BRIDGE SHEET
5 OF 8

I-75 / I-575 NORTHWEST CORRIDOR

I-75 REVERSIBLE OVER FREY RD
BEARING INFORMATION

COBB COUNTY NH000-0073-03(242)

DRAWING NO.
35-212

STATE	PROJECT NUMBER	SHEET NO.	TOTAL SHEETS
GA	NHOOO-0073-03(242)		

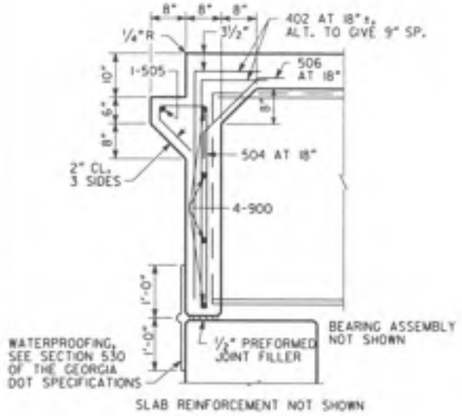

SECTION AT ENDWALL

(BENTS 1 & 4)

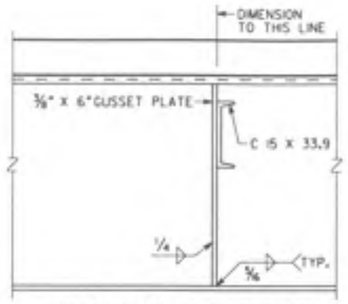

SECTION THRU DIAPHRAGM

(ALL SPANS)

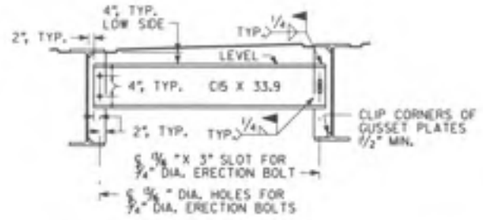

DIAPHRAGM DETAILS

NOTE: WELD DIAPHRAGMS BEFORE DECK IS POURED.

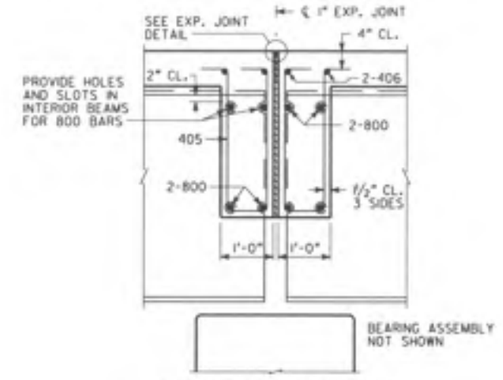

SECTION THRU EDGE BEAM

(BENTS 2 & 3)

JOINT OPENING		
TEMPERATURE (°F)	BENT 2 W (IN.)	BENT 3 W (IN.)
30	0.992	1.038
60	0.750	0.750
90	0.508	0.462

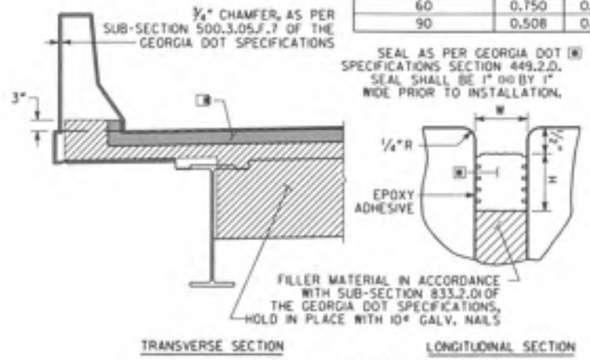

EXPANSION JOINT DETAILS

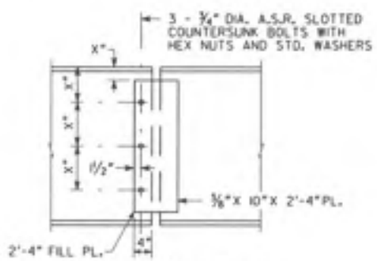

CONCEALMENT PLATE DETAIL

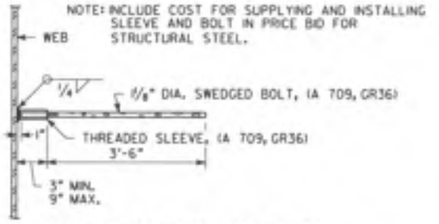

EDGE BEAM BAR LAP DETAIL

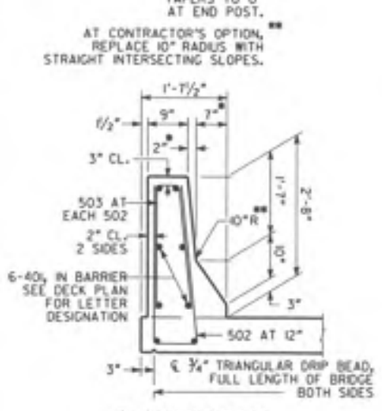

BARRIER DETAIL

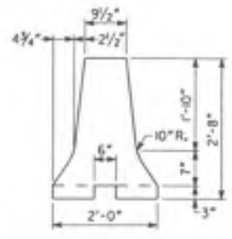

HOV BARRIER DETAIL

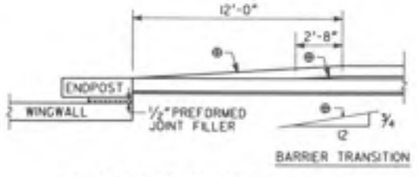

BARRIER TRANSITION DETAIL

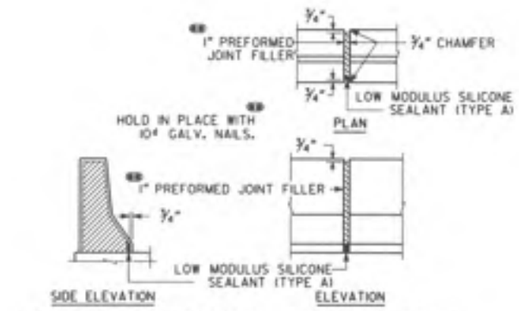

DETAILS OF 1" EXPANSION JOINT IN BARRIER

NOTE II IMPORTANT NOTICE: THIS DRAWING IS AN INCOMPLETE WORK-IN-PROGRESS AND ITS USE IS SUBJECT TO NOTE I ON DRAWING NO. 1-01.

BRIDGE NO. 33

REVISIONS						
NO	DATE	DESCRIPTION	DRIG	CHKR	SUPV	APPR
A	6/30/09	Progress Drawings ISO 11 Revision 21	AEW	JCR	GLE	SJL
B	9/25/09	SOL SUBMISSION	AEW	JCR	GLE	SJL
C	11/30/09	PLOTTED PER GDOT'S TERMINATION FOR CONVENIENCE DIRECTION	AEW			

ARDIS, ESNAGER-MEYBOOM 11/20/09
DRAWN BY DATE
CHECKED BY DATE
SUPERVISOR DATE
APPROVED DATE

GTP Georgia Transportation Partners

NORTHWEST I-75/I-575 CORRIDOR

DEPARTMENT OF TRANSPORTATION
STATE OF GEORGIA

JBT J.B. Trimble, Inc.
2550 Heritage Ct, SE Suite 250
Atlanta GA 30339-3062
(770) 952-1022

BRIDGE SHEET 6 OF 8

I-75 / I-575 NORTHWEST CORRIDOR

I-75 REVERSIBLE OVER FREY RD

MISCELLANEOUS DETAILS

COBB COUNTY NHOOO-0073-03(242)

DRAWING NO. 35-213

STATE	PROJECT NUMBER	SHEET NO.	TOTAL SHEETS
GA	NH000-0073-03(242)		

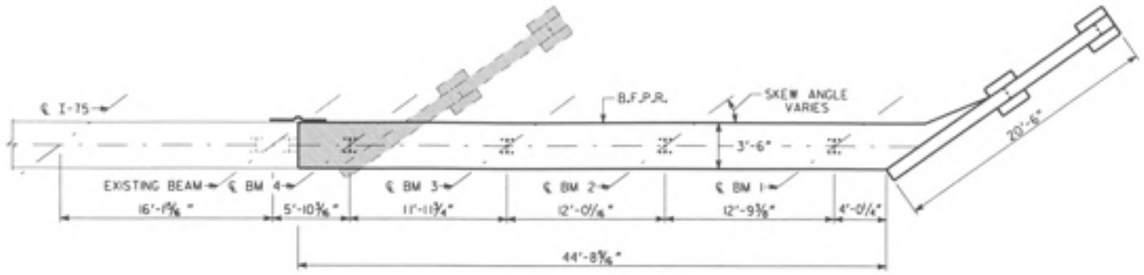

PLAN

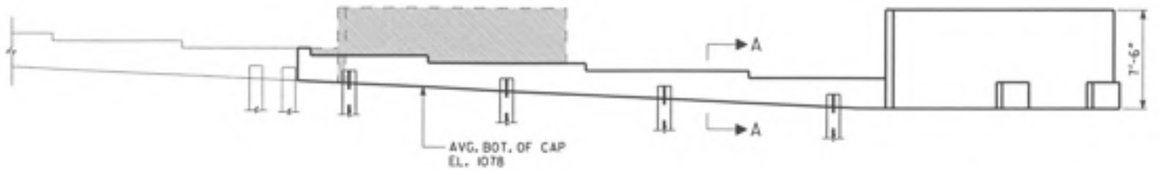

ELEVATION
(BENT 1 LOOKING BACK)

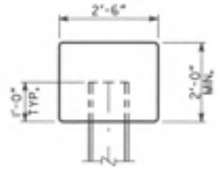

SECTION A-A

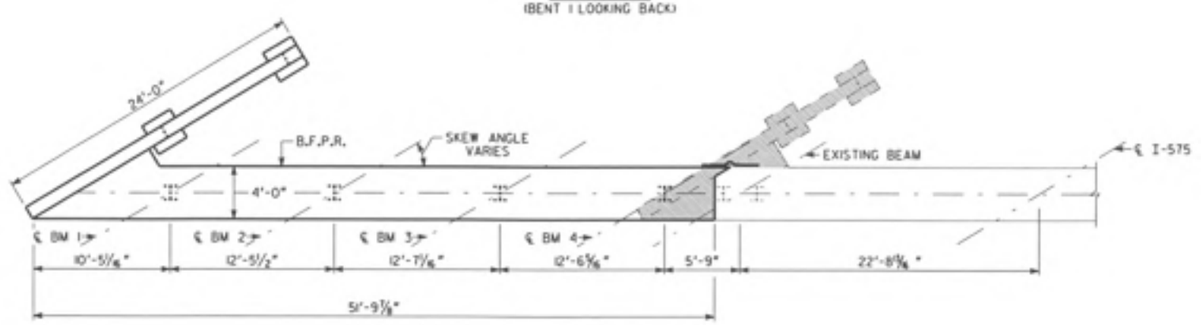

PLAN

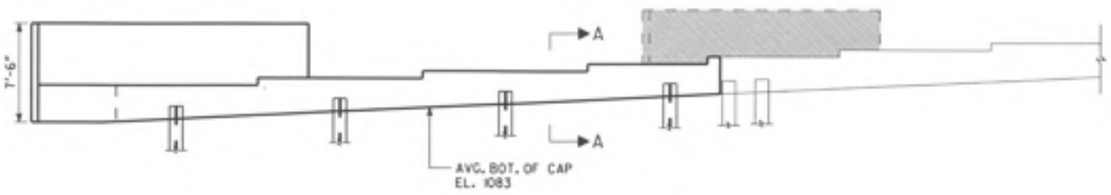

ELEVATION
(BENT 4 LOOKING AHEAD)

NOTE:

1. MAINTAIN 2" CL. ON ALL REINFORCEMENT UNLESS OTHERWISE NOTED.

PLAN DRIVING OBJECTIVE

ALL PILES SHALL BE DRIVEN TO A DRIVING RESISTANCE OF 58 TONS AFTER AN ESTIMATED TIP ELEVATION SHOWN BELOW IS ACHIEVED

BENT	EST. TIP
1	XXX
4	XXX

ALL PILES SHALL BE STEEL H, HP 14 X 73

NOTE !! IMPORTANT NOTICE!! THIS DRAWING IS AN INCOMPLETE WORK-IN-PROGRESS AND ITS USE IS SUBJECT TO NOTE 1 ON DRAWING NO. 1-01.

BRIDGE NO. 33

ABBAS ESHAGHI-HEYDARI 11/20/09
DRAWN BY DATE
CHECKED BY DATE
SUPERVISOR DATE
APPROVED DATE

REVISIONS

NO	DATE	DESCRIPTION	DRIG	CHKR	SUPV	APPR
A	6/30/09	Progress Drawings (50 % Revision 2)	AEM	JCR	GLE	SJL
B	9/25/09	SDS SUBMISSION	AEM	JCR	GLE	SJL
C	11/30/09	PLOTTED PER GDOT'S TERMINATION FOR CONVENIENCE DIRECTION	AEM			

GTP Georgia Transportation Partners

NORTHWEST I-75/I-575 CORRIDOR

DEPARTMENT OF TRANSPORTATION
STATE OF GEORGIA

JBT J.B. Trimble, Inc.
2550 Heritage Ct, SE Suite 250
Atlanta GA 30339-3062
(770) 952-1022

BRIDGE SHEET 7 OF 8

I-75 / I-575 NORTHWEST CORRIDOR

I-75 REVERSIBLE OVER FREY RD
END BENTS

COBB COUNTY NH000-0073-03(242)

DRAWING NO. 35-214

STATE	PROJECT NUMBER	SHEET NO.	TOTAL SHEETS
GA	NH000-0073-03(242)		

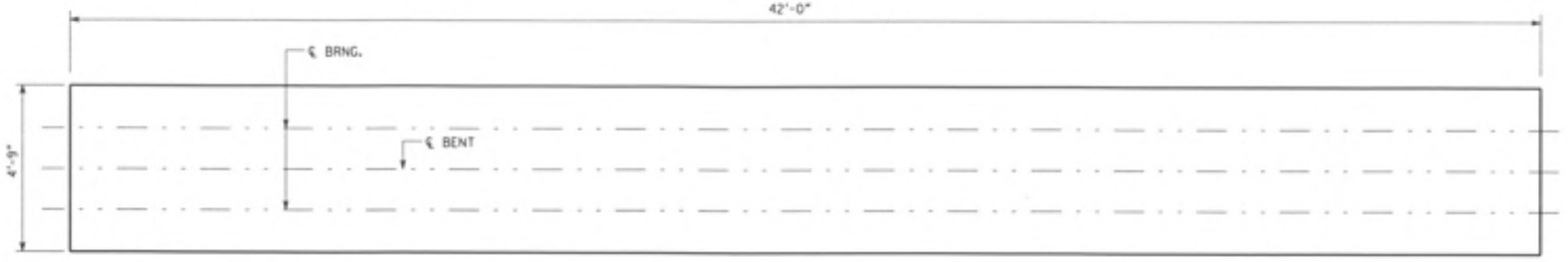

PLAN

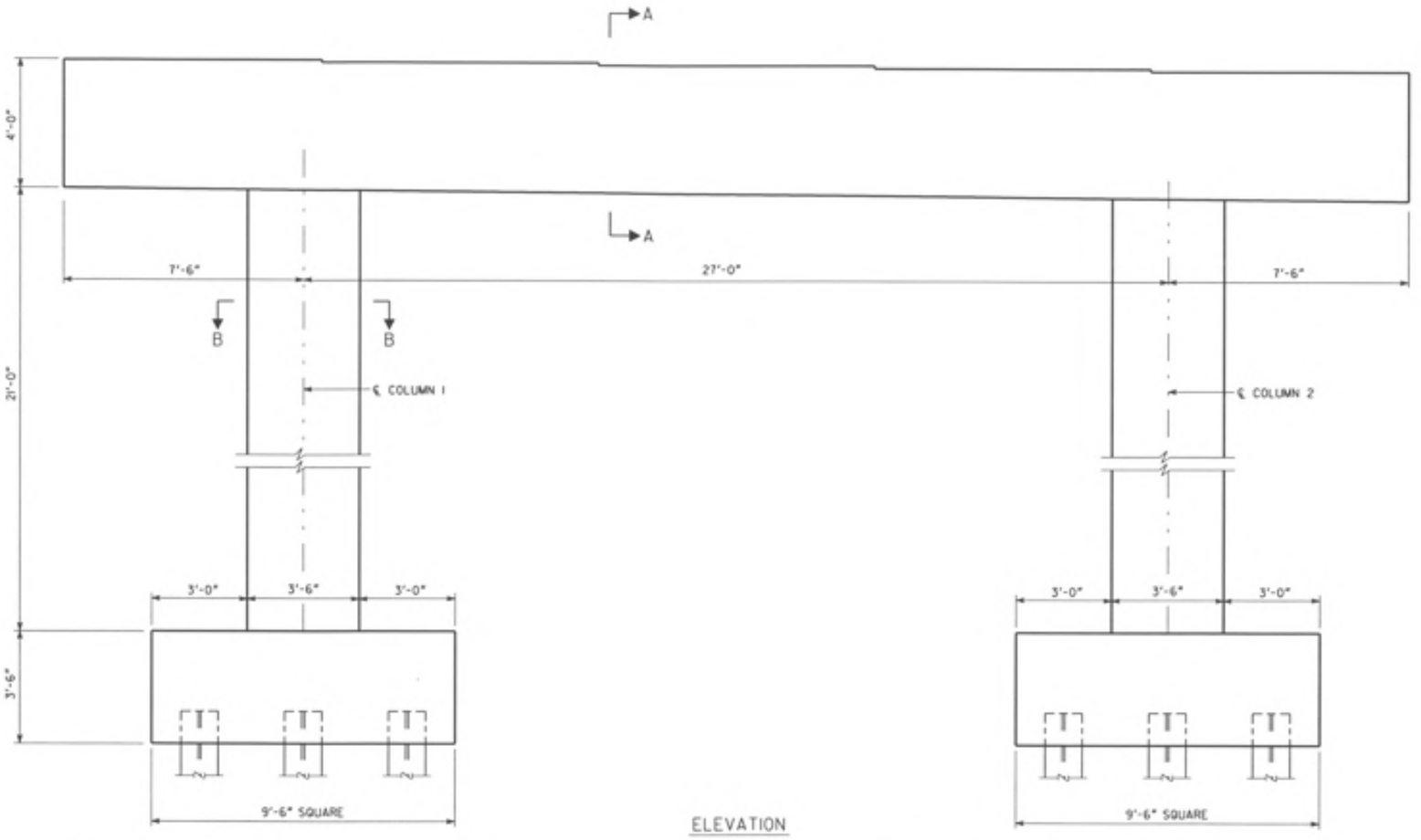

ELEVATION

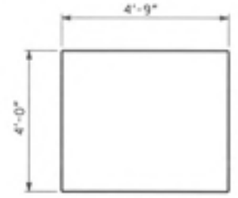

SECTION A-A

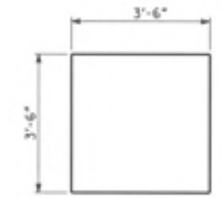

SECTION B-B

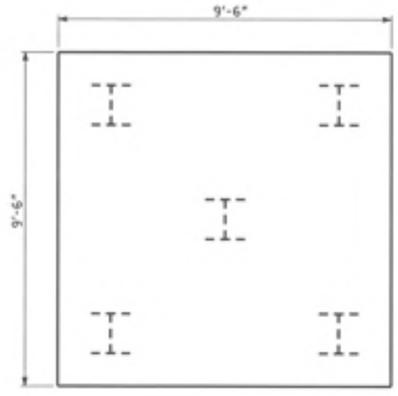

PILE LAYOUT

PLAN DRIVING OBJECTIVE

ALL PILES SHALL BE DRIVEN TO A DRIVING RESISTANCE OF 96 TONS AFTER A MINIMUM TIP ELEVATION OF XXX IS ACHIEVED.

ALL PILES SHALL BE STEEL H, HP 14 X 73

NOTE ß IMPORTANT NOTICE: THIS DRAWING IS AN INCOMPLETE WORK-IN-PROGRESS AND ITS USE IS SUBJECT TO NOTE 1 ON DRAWING NO. 1-01.

BRIDGE NO. 33

ABBAS ESHAGHI-HEYDARI 11/20/09
DRAWN BY DATE
CHECKED BY DATE
SUPERVISOR DATE
APPROVED DATE

REVISIONS

NO	DATE	DESCRIPTION	DRG	CHKR	SUPV	APPR
A	6/30/09	Progress Drawings ISO 11 Revision 21	AEW	JCR	GLE	SJL
B	9/25/09	SOIL SUBMISSION	AEW	JCR	GLE	SJL
C	11/30/09	PLOTTED PER GDOT'S TERMINATION FOR CONVENIENCE DIRECTION	AEW			

GTP Georgia Transportation Partners

NORTHWEST I-75/I-575 CORRIDOR

DEPARTMENT OF TRANSPORTATION
STATE OF GEORGIA

JBT J.B. Trimble, Inc.
2550 Heritage Ct, SE Suite 250
Atlanta GA 30339-3062
(770) 952-1022

BRIDGE SHEET 8 OF 8

I-75 / I-575 NORTHWEST CORRIDOR

I-75 REVERSIBLE OVER FREY RD
BENT INFORMATION

COBB COUNTY NH000-0073-03(242)

DRAWING NO. 35-215

11/20/09 AM
12/1/2009
n:\work\2551\Drawings\sub\33\preliminary\Frey_B1.dgn

STATE	PROJECT NUMBER	SHEET NO.	TOTAL SHEETS
GA.	NH000-0073-03(242)		

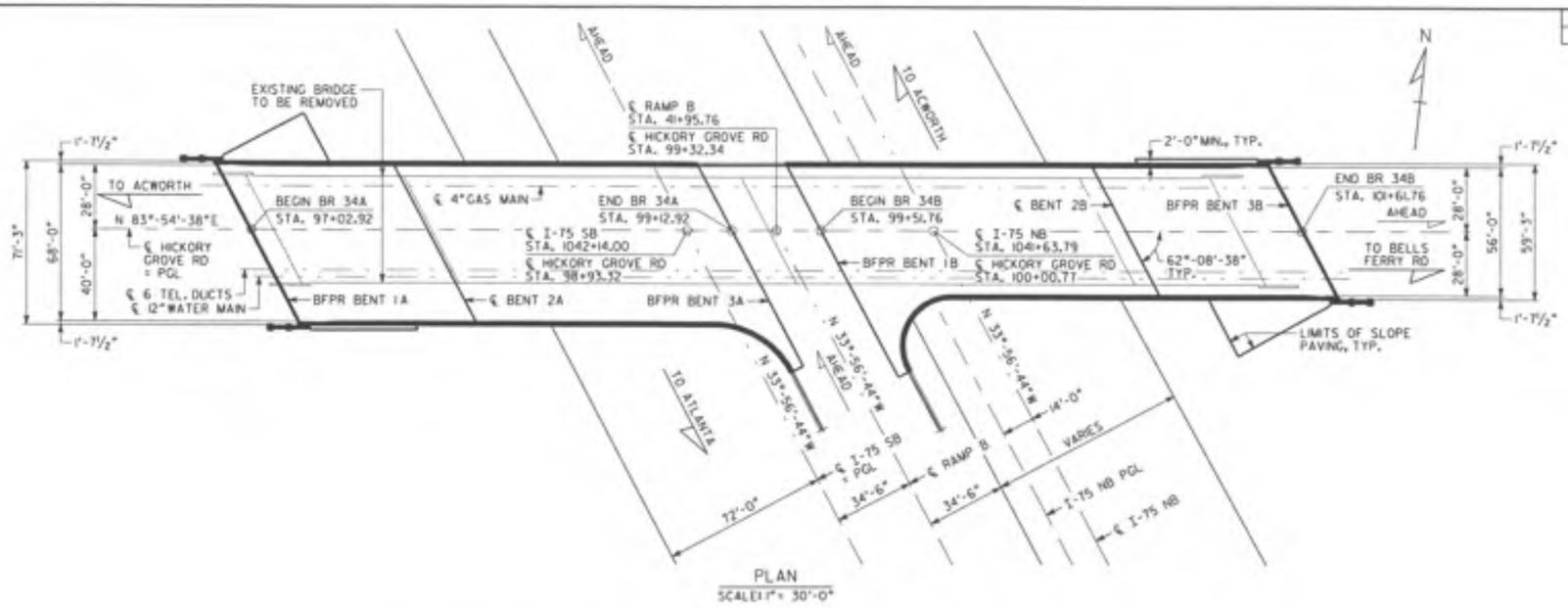

PLAN
SCALE: 1" = 30'-0"

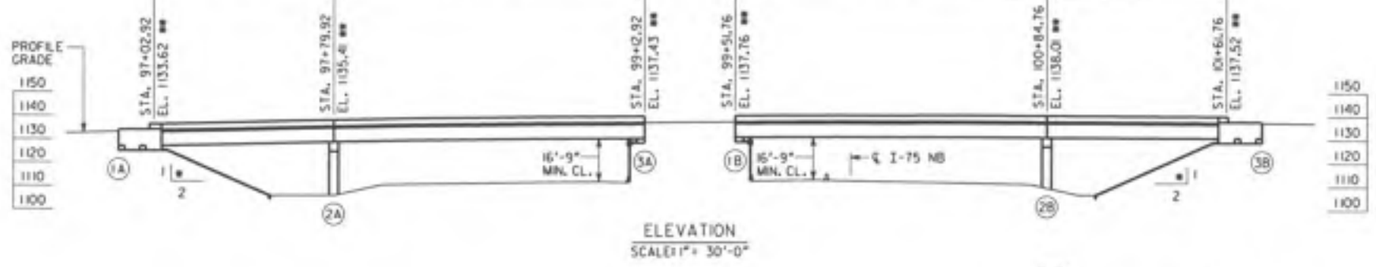

ELEVATION
SCALE: 1" = 30'-0"

NOTES:

1. * SLOPE NORMAL TO END BENTS.
2. ** STATIONS ARE ALONG ℄ HICKORY GROVE RD AT THE INTERSECTION OF ℄ HICKORY GROVE RD AND BFPR OR ℄ BENT. ELEVATIONS ARE ALONG PGL.
3. END BENT PILES NOT SHOWN.
4. THE PROPOSED BRIDGE DECK IS TO BE BUILT ON A CONSTANT CROSS SLOPE OF 2%, SLOPING DOWN TO THE RIGHT.

BERM ELEVATIONS ⊛

BENT	LEFT	RIGHT
1A	1124.74	1124.34
3A	1127.80	1127.00
1B	1129.13	1128.27
3B	1129.12	1127.82

⊛NOTE: FOR BRIDGE ENDROLL STAKING PURPOSES ONLY.

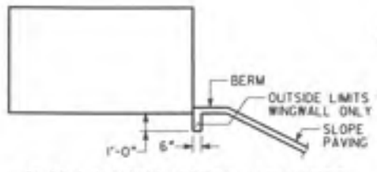

SLOPE PAVING DETAIL AT WINGS

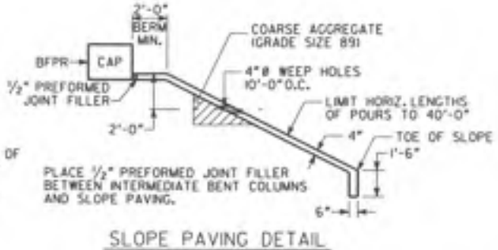

SLOPE PAVING DETAIL

+3.4286% -2.0000%
P.V.I.
STA. 99+50.00
EL. 1142.50
700 FT V.C.

HICKORY GROVE RD GRADE DATA

STA. 1040+50.00	STA. 1041+00.00	STA. 1041+50.00	STA. 1042+00.00	STA. 1042+50.00	STA. 1043+00.00
EL. 1113.92	EL. 1113.48	EL. 1113.08	EL. 1112.67	EL. 1112.24	EL. 1111.73

I-75 NB GRADE DATA

STA. 1040+50.00	STA. 1041+00.00	STA. 1041+50.00	STA. 1042+00.00	STA. 1042+50.00	STA. 1043+00.00
EL. 1113.62	EL. 1113.21	EL. 1112.86	EL. 1112.47	EL. 1111.05	EL. 1111.58

I-75 SB GRADE DATA

DESIGN DATA

SPECIFICATIONS ---------- AASHTO 17TH EDITION, 2002
(DESIGNED FOR SEISMIC PERFORMANCE CATEGORY A)
TYPICAL HS20-44 AND/OR MILITARY LOADING --- IMPACT ALLOWED
FUTURE PAVING ALLOWANCE ---------- 30 LBS PER SQ FT

BRIDGE 34A CONSISTS OF

1 - 77'-0" BULB TEE, 72", PSC BEAM SPAN ----- SPECIAL DESIGN
1 - 133'-0" BULB TEE, 72", PSC BEAM SPAN ----- SPECIAL DESIGN
2 - PILE END BENTS ---------- SPECIAL DESIGN
1 - CONCRETE INTERMEDIATE BENTS ---------- SPECIAL DESIGN

BRIDGE 34B CONSISTS OF

1 - 133'-0" BULB TEE, 72", PSC BEAM SPAN ----- SPECIAL DESIGN
1 - 77'-0" BULB TEE, 72", PSC BEAM SPAN ----- SPECIAL DESIGN
2 - PILE END BENTS ---------- SPECIAL DESIGN
1 - CONCRETE INTERMEDIATE BENTS ---------- SPECIAL DESIGN

UTILITIES

12" WATER MAIN ---------- COBB COUNTY WATER AND SEWAGE SYSTEM
6 TELEPHONE CONDUITS ---------- SOUTHERN BELL
4" GAS MAIN ---------- ATLANTA GAS LIGHT CO

EXISTING BRIDGE SERIAL NO. 067-0140-A
EXISTING BRIDGE I.D. NO. 067-00400-274J2N
PROJECT P.I. NO. 714130

BRIDGE NO. 34A & 34B

ABBAS ESHAGHPEYKOUH 11/20/09
DRAWN BY DATE
CHECKED BY DATE
SUPERVISOR DATE
APPROVED DATE

REVISIONS

NO	DATE	DESCRIPTION	ORIG	CHKR	SUPV	APPR
A	6/30/09	Progress Drawings (50 % Revision 2)	ABK	JCR	GLE	SJL
B	9/25/09	SDI SUBMISSION	ABK	JCR	GLE	SJL
C	11/30/09	PLOTTED PER GDOT'S TERMINATION FOR CONVENIENCE DIRECTION	ABK			

GTP Georgia Transportation Partners

NORTHWEST I-75/I-575 CORRIDOR

DEPARTMENT OF TRANSPORTATION
STATE OF GEORGIA

JBT J.B. Trimble, Inc.
2550 Heritage Ct, SE Suite 250
Atlanta GA 30339-3062
(770) 952-1022

BRIDGE SHEET 1 OF 5

I-75 / I-575 NORTHWEST CORRIDOR

HICKORY GROVE RD OVER I-75
PLAN AND ELEVATION

COBB COUNTY NH000-0073-03(242)

DRAWING NO. 35-216

STATE	PROJECT NUMBER	SHEET NO.	TOTAL SHEETS
GA	NH000-0073-03(242)		

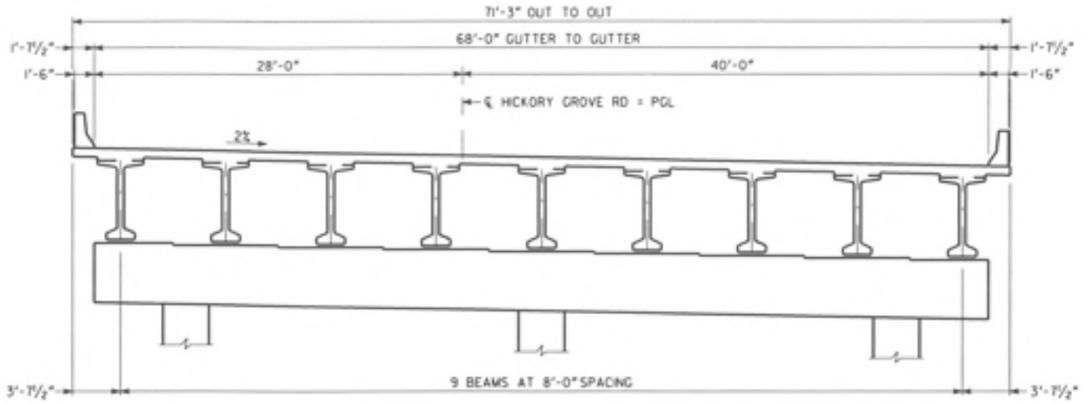

DECK SECTION
(LOOKING AHEAD, BRIDGE 34A)

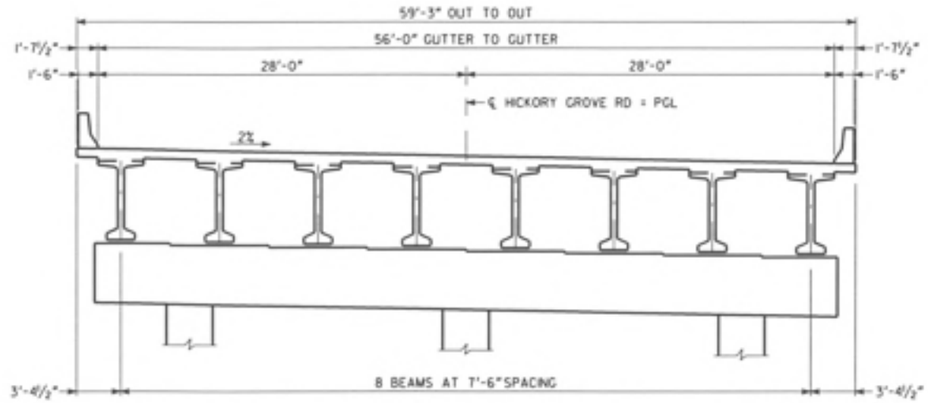

DECK SECTION
(LOOKING AHEAD, BRIDGE 34B)

NOTE ¤ IMPORTANT NOTICE: THIS DRAWING IS AN INCOMPLETE WORK-IN-PROGRESS AND ITS USE IS SUBJECT TO NOTE 1 ON DRAWING NO. 1-01.

BRIDGE NO. 34A & 34B

ABBAS ESHAGHI-MEYBODI 11/20/09
DRAWN BY DATE
CHECKED BY DATE
SUPERVISOR DATE
APPROVED DATE

NO	DATE	DESCRIPTION	ORIG	CHKR	SUPV	APPR
A	6/30/09	Progress Drawings ISD 11 Revision 21	AEM	JCR	GLE	S.A.
B	9/25/09	50% SUBMISSION	AEM	JCR	GLE	S.A.
C	11/30/09	PLOTTED PER GDOT'S TERMINATION FOR CONVENIENCE DIRECTION	AEM			

REVISIONS

GTP Georgia Transportation Partners

NORTHWEST I-75/I-575 CORRIDOR

DEPARTMENT OF TRANSPORTATION
STATE OF GEORGIA

JBT J.B. Trimble, Inc.
2550 Heritage Ct, SE Suite 250
Atlanta GA 30339-3062
(770) 952-1022

BRIDGE SHEET 2 OF 5

I-75 / I-575 NORTHWEST CORRIDOR

HICKORY GROVE RD OVER I-75

CONSTRUCTION SEQUENCE

COBB COUNTY NH000-0073-03(242)

DRAWING NO. 35-217

n:\ga\255717\drawings\structs\br34\preliminary\HickoryGrove_CS.dgn 12/1/2009 1:49:36 PM

STATE	PROJECT NUMBER	SHEET NO.	TOTAL SHEETS
GA	NH000-0073-03(242)		

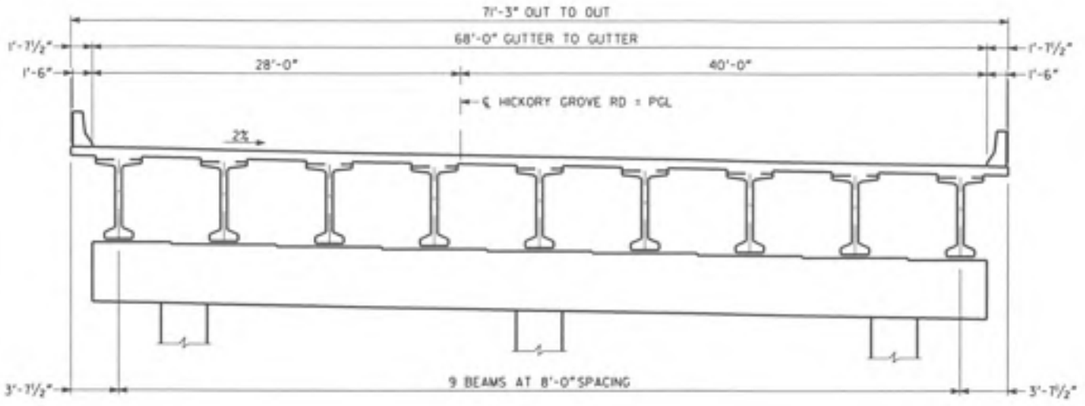

DECK SECTION
(LOOKING AHEAD, BRIDGE 34A)

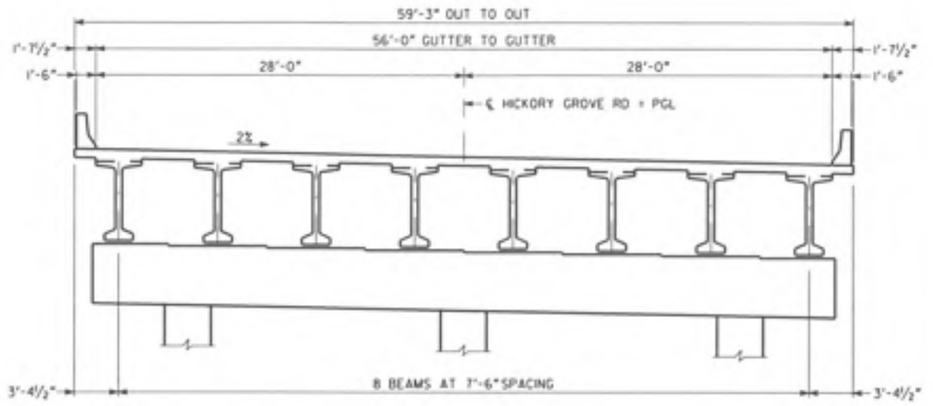

DECK SECTION
(LOOKING AHEAD, BRIDGE 34B)

SPAN	AVERAGE DECK WIDTH	BEAM TYPE	NUMBER OF BEAMS	BEAMS	SLAB THICKNESS	BEAMS SPACING	AVERAGE BEAM LENGTH	RELEASE CONCRETE STRENGTH (℄)	FINAL CONCRETE STRENGTH (℄)	STRAND TYPE	TOTAL NUMBER OF STRANDS	NUMBER OF RAISED STRANDS	HEIGHT OF RAISED STRANDS
1-A	71'-3"	III	7	2-8	8"	8'-0"	40'-7 5/16"	5,000 PSI	6,000 PSI	½" SPECIAL	30	6	1'-9"
1-A FASCIA	71'-3"	BULB-TEE 72"	2	1, 9	8"	8'-0"	109'-9 7/16"	4,500 PSI	5,000 PSI	½" SPECIAL	18	0	0'-0"
2-A	71'-3"	BULB-TEE 72"	9	1-9	8"	8'-0"	48'-7 5/16"	6,800 PSI	8,000 PSI	½" SPECIAL	58	26	1'-8"

SPAN	AVERAGE DECK WIDTH	BEAM TYPE	NUMBER OF BEAMS	BEAMS	SLAB THICKNESS	BEAMS SPACING	AVERAGE BEAM LENGTH	RELEASE CONCRETE STRENGTH (℄)	FINAL CONCRETE STRENGTH (℄)	STRAND TYPE	TOTAL NUMBER OF STRANDS	NUMBER OF RAISED STRANDS	HEIGHT OF RAISED STRANDS
1-B	59'-3"	BULB-TEE 72"	8	1-8	7¾"	7'-6"	40'-7 5/16"	6,800 PSI	8,000 PSI	½" SPECIAL	52	20	1'-2½"
2-B	59'-3"	III	6	2-7	8"	7'-6"	109'-9 7/16"	5,000 PSI	6,000 PSI	½" SPECIAL	30	6	1'-10½"
2-B FASCIA	59'-3"	BULB-TEE 72"	2	1, 8	8"	7'-6"	48'-7 5/16"	4,500 PSI	5,000 PSI	½" SPECIAL	18	0	0'-0"

NOTES:

1. MAINTAIN 2" CLEARANCE ON ALL REINFORCEMENT UNLESS OTHERWISE NOTED.
2. CARE SHALL BE EXERCISED IN REMOVAL OF EXISTING CONCRETE AND RETAIN EXISTING REINFORCEMENT. EXISTING REINFORCEMENT BARS TO BE SPLICED A MINIMUM OF 2'-6". ANY EXISTING REINFORCEMENT STEEL DAMAGED DURING REMOVAL SHALL BE REPLACED BY THE CONTRACTOR AT NO ADDITIONAL COST.
3. NON-CONTACT LAPS MAY BE USED BETWEEN EXISTING AND NEW TRANSVERSE DECK BARS.

NOTE II IMPORTANT NOTICE: THIS DRAWING IS AN INCOMPLETE WORK-IN-PROGRESS AND ITS USE IS SUBJECT TO NOTE I ON DRAWING NO. I-01.

BRIDGE NO. 34A & 34B

ABBAS ESHAGIEH-HEYBOOD	11/20/09
DRAWN BY	DATE
CHECKED BY	DATE
SUPERVISOR	DATE
APPROVED	DATE

REVISIONS

NO	DATE	DESCRIPTION	ORIG	CHKR	SUPV	APPR
A	6/30/09	Progress Drawings (50 ⅓ Revision 2)	AEM	JCR	GLE	SJL
B	9/25/09	50% SUBMISSION	AEM	JCR	GLE	SJL
C	11/30/09	PLOTTED PER GDOT'S TERMINATION FOR CONVENIENCE DIRECTION	AEM			

GTP Georgia Transportation Partners

NORTHWEST I-75/I-575 CORRIDOR

DEPARTMENT OF TRANSPORTATION
STATE OF GEORGIA

JBT J.B. Trimble, Inc.
2550 Heritage Ct, SE Suite 250
Atlanta GA 30339-3062
(770) 952-1022

BRIDGE SHEET
3 OF 5

I-75 / I-575 NORTHWEST CORRIDOR

HICKORY GROVE RD OVER I-75
DECK SECTION

COBB COUNTY NH000-0073-03(242)

DRAWING NO. 35-218

STATE	PROJECT NUMBER	SHEET NO.	TOTAL SHEETS
GA	NH000-0073-03(242)		

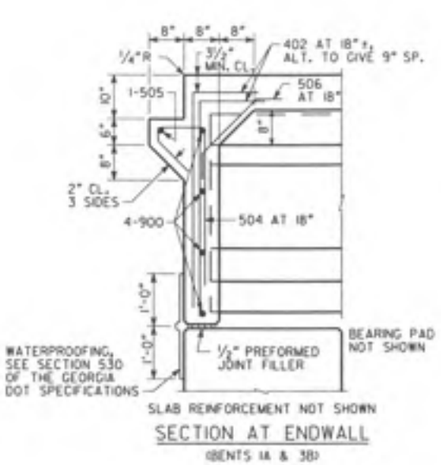

SLAB REINFORCEMENT NOT SHOWN

SECTION AT ENDWALL

(BENTS 1A & 3B)

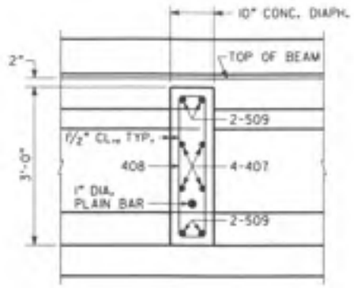

SLAB REINFORCEMENT NOT SHOWN

SECTION THRU DIAPHRAGM

(SPANS 1A & 2B)

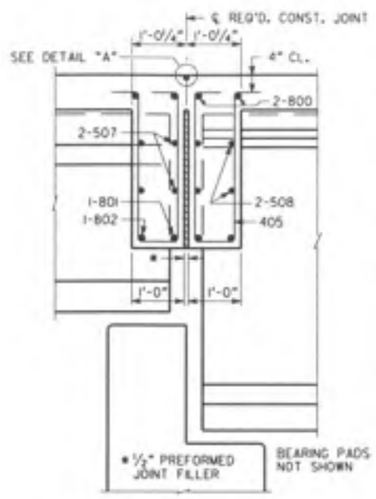

SLAB REINFORCEMENT NOT SHOWN

SECTION THRU EDGE BEAM

(BENT 2A, 2B SIMILAR)

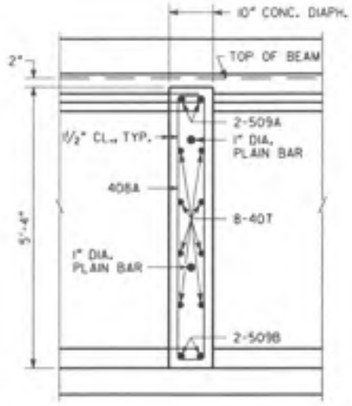

SLAB REINFORCEMENT NOT SHOWN

SECTION THRU DIAPHRAGM

(SPANS 2A & 1B)

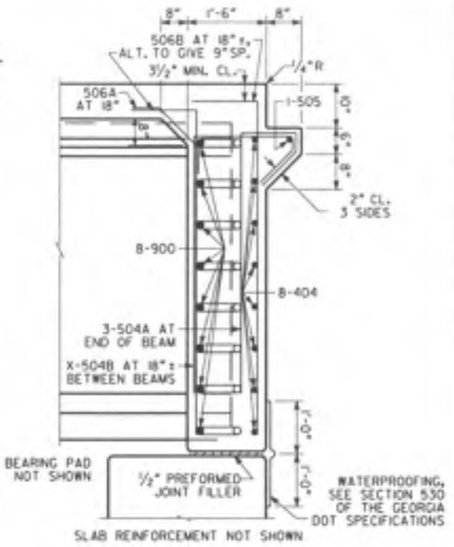

SLAB REINFORCEMENT NOT SHOWN

SECTION AT ENDWALL

(BENTS 3A & 1B)

JOINT OPENING (BENTS 2A & 2B)	
TEMPERATURE (°F)	W (IN.)
30	0.916
60	0.750
90	0.584

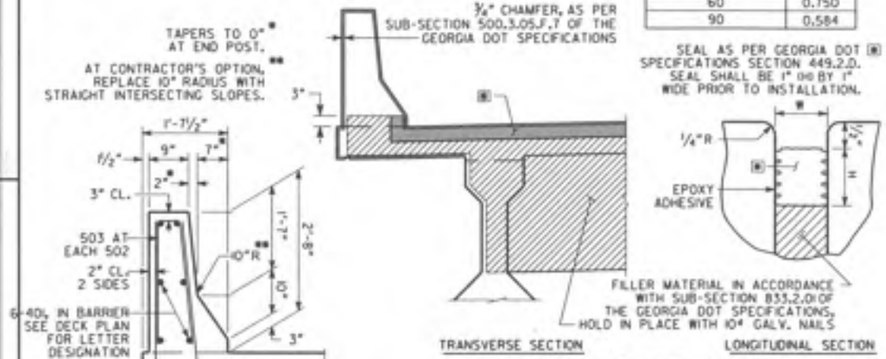

BARRIER DETAIL

EXPANSION JOINT DETAILS

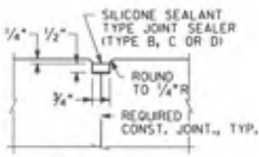

DETAIL "A"

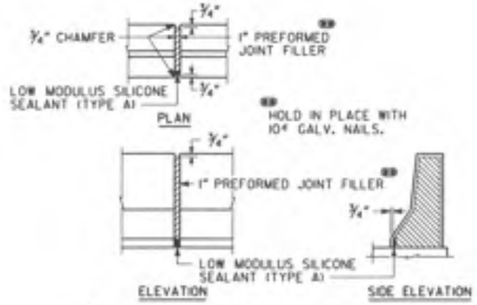

DETAILS OF 1" EXPANSION JOINT IN BARRIER

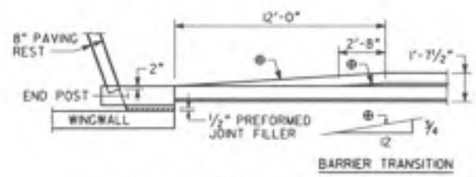

BARRIER TRANSITION DETAIL

NOTE ‡ IMPORTANT NOTICE: THIS DRAWING IS AN INCOMPLETE WORK-IN-PROGRESS AND ITS USE IS SUBJECT TO NOTE ‡ ON DRAWING NO. 1-01.

BRIDGE NO. 34A & 34B

REVISIONS							
NO	DATE	DESCRIPTION	ORIG	CHKR	SUPV	APPR
A	6-30-09	Progress Drawings (50 % Revision 2)	AEM	JCR	DLE	SJL
B	9-25-09	90% Submission	AEM	JCR	DLE	SJL
C	11-30-09	PLOTTED PER GDOT'S TERMINATION FOR CONVENIENCE DIRECTION	AEM			

Georgia Transportation Partners

DEPARTMENT OF TRANSPORTATION
STATE OF GEORGIA

J.B. Trimble, Inc.
2550 Heritage Ct, SE Suite 250
Atlanta GA 30339-3062
(770) 952-1022

BRIDGE SHEET 4 OF 5

I-75 / I-575 NORTHWEST CORRIDOR

HICKORY GROVE RD OVER I-75

MISCELLANEOUS DETAILS

COBB COUNTY NH000-0073-03(242)

DRAWING NO. 35-219

STATE	PROJECT NUMBER	SHEET NO.	TOTAL SHEETS
GA	NH000-0073-03(242)		

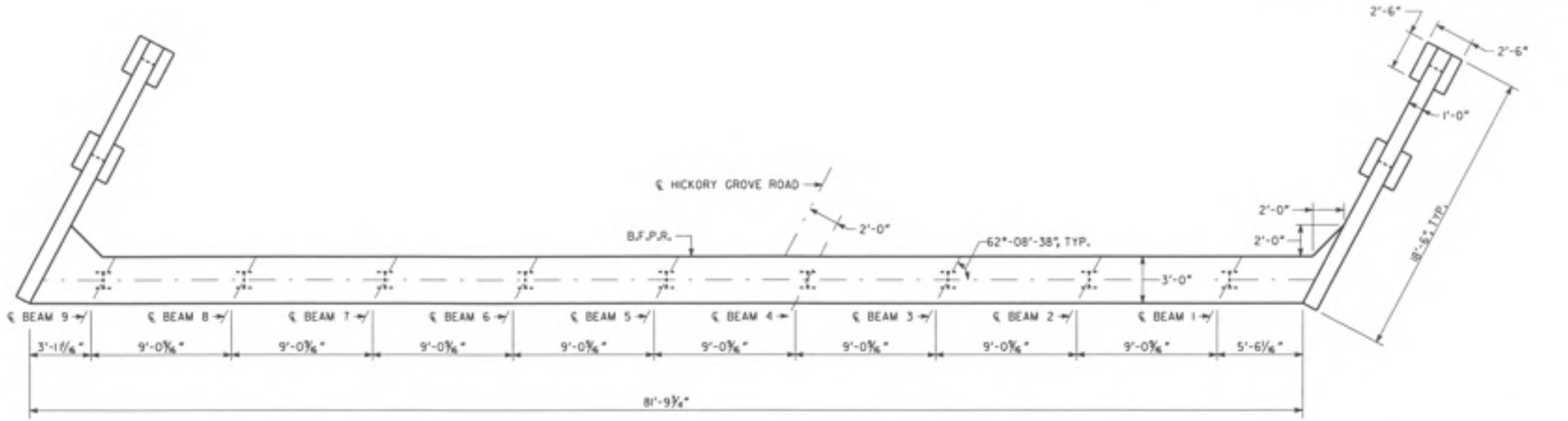

PLAN

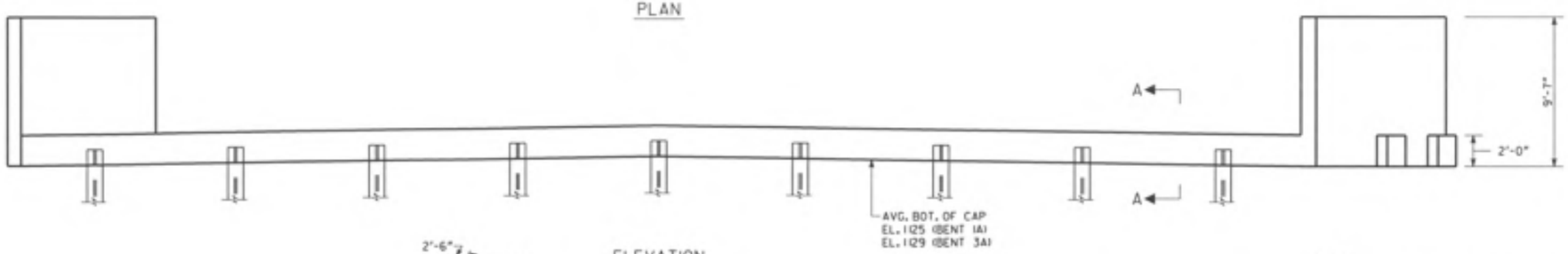

ELEVATION

BENT 1A LOOKING BACK
(BENT 3A SIMILAR)

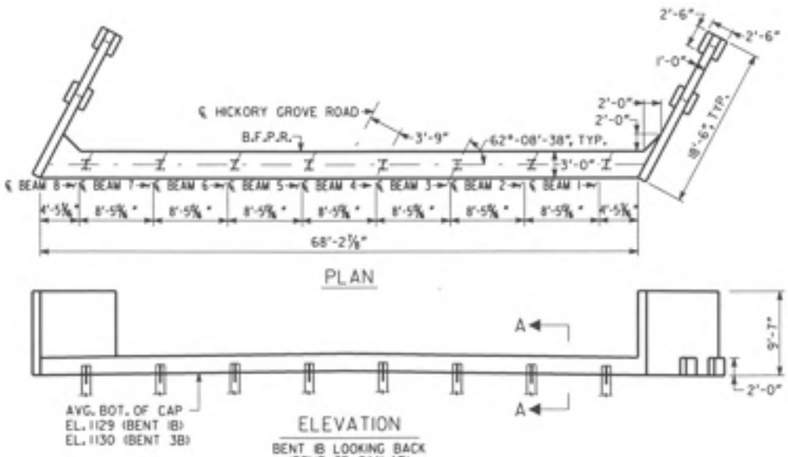

PLAN

ELEVATION

BENT 1B LOOKING BACK
(BENT 3B SIMILAR)

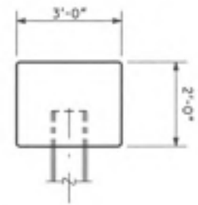

SECTION A-A

NO SCALE

NOTE:

1. MAINTAIN 2" CL. ON ALL REINFORCEMENT UNLESS OTHERWISE NOTED.

PLAN DRIVING OBJECTIVE

ALL PILES SHALL BE DRIVEN TO A DRIVING RESISTANCE OF 76 TONS AFTER AN ESTIMATED TIP ELEVATION SHOWN BELOW IS ACHIEVED

BENT	EST. TIP
1	XXX
4	XXX

ALL PILES SHALL BE STEEL H, HP 14 X 73

NOTE 8 IMPORTANT NOTICE: THIS DRAWING IS AN INCOMPLETE WORK-IN-PROGRESS AND ITS USE IS SUBJECT TO NOTE 1 ON DRAWING NO. 1-01.

BRIDGE NO. 34A & 34B

ABBAS ESHAGHI-MEYBODI 11/20/09
DRAWN BY DATE
CHECKED BY DATE
SUPERVISOR DATE
APPROVED DATE

REVISIONS

NO	DATE	DESCRIPTION	DRG	CHKR	SUPV	APPR
A	6/30/09	Progress Drawings (50 % Revision 2)	AEM	JCR	GLE	SJL
B	9/25/09	50% SUBMISSION	AEM	JCR	GLE	SJL
C	11/30/09	PLOTTED PER GDOT'S TERMINATION FOR CONVENIENCE DIRECTION	AEM			

GTP Georgia Transportation Partners

NORTHWEST I-75/I-575 CORRIDOR

DEPARTMENT OF TRANSPORTATION
STATE OF GEORGIA

JBT J.B. Trimble, Inc.
2550 Heritage Ct, SE Suite 250
Atlanta GA 30339-3062
(770) 952-1022

BRIDGE SHEET 5 OF 5

I-75 / I-575 NORTHWEST CORRIDOR

HICKORY GROVE RD OVER I-75
END BENTS

COBB COUNTY NH000-0073-03(242)

DRAWING NO. 35-220