STATE	PROJECT NUMBER	SHEET NO.	TOTAL SHEETS
GA	NH000-0575-01(028)		

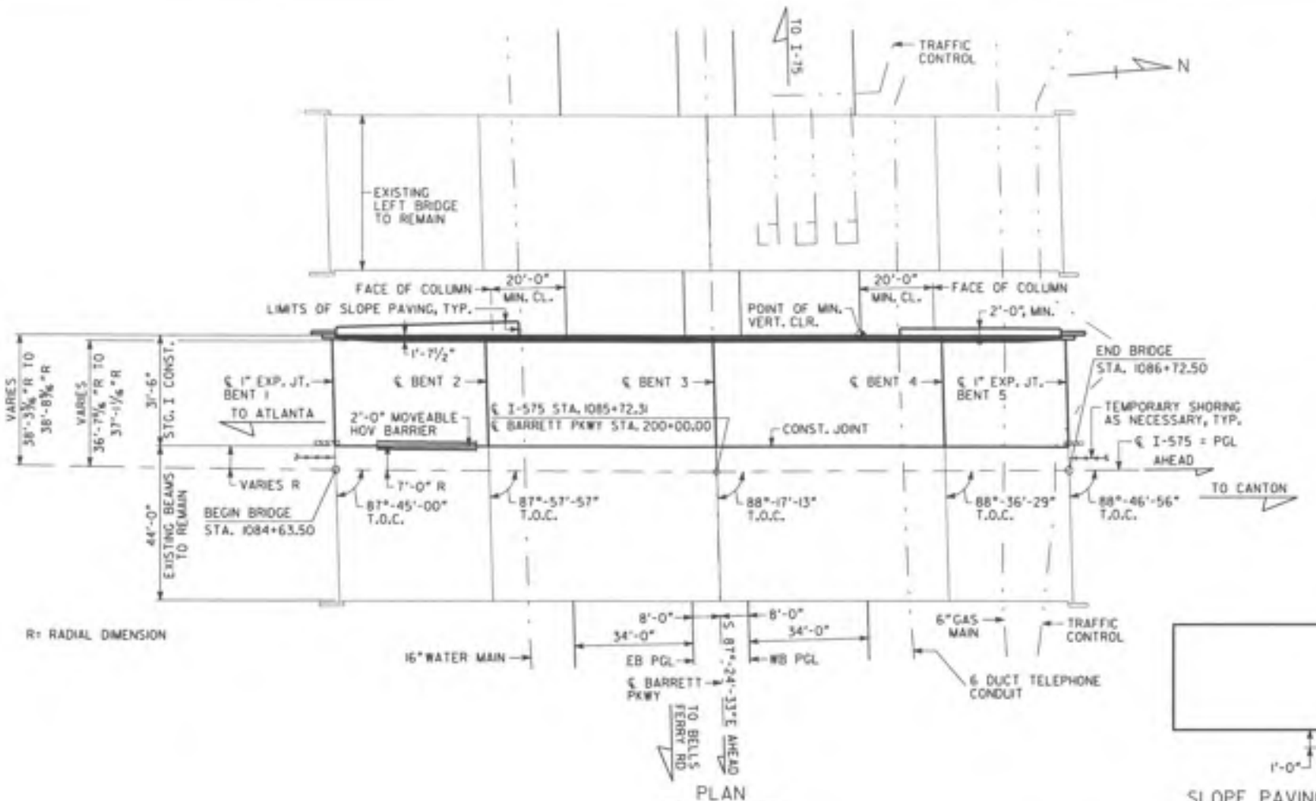

PLAN
SCALE: 1" = 20'-0"

P.I. STA. = 1091+44.26
Δ = 21°-56'-09"
D = 0°-29'-38"
T = 2248.08 FT
L = 4440.11 FT
R = 11600.00 FT

℄ I-575
HORIZONTAL CURVE DATA

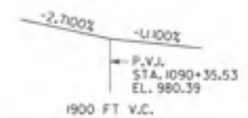

I-575
GRADE DATA

BARRETT PKWY
EB PGL GRADE DATA

BARRETT PKWY
WB PGL GRADE DATA

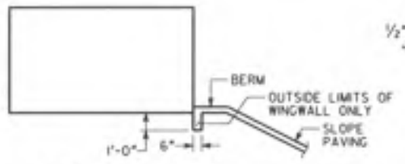

SLOPE PAVING DETAIL AT WINGS

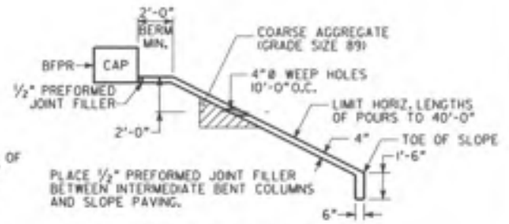

SLOPE PAVING DETAIL

BERM ELEVATIONS ⊛		
BENT	LEFT	RIGHT
1	991.89	992.42
5	987.12	987.66

⊛NOTE: FOR BRIDGE ENDROLL STAKING PURPOSES ONLY.

NOTES:

1. * SLOPE NORMAL TO END BENTS.
2. ** STATIONS ARE ALONG ℄ I-575 AT THE INTERSECTION OF ℄ I-575 AND BFPR OR ℄ BENT. ELEVATIONS ARE ALONG PGL.
3. END BENT PILES NOT SHOWN.
4. THE PROPOSED BRIDGE DECK IS TO BE BUILT ON A CONSTANT CROSS SLOPE OF 2%, SLOPING DOWN TO THE LEFT.

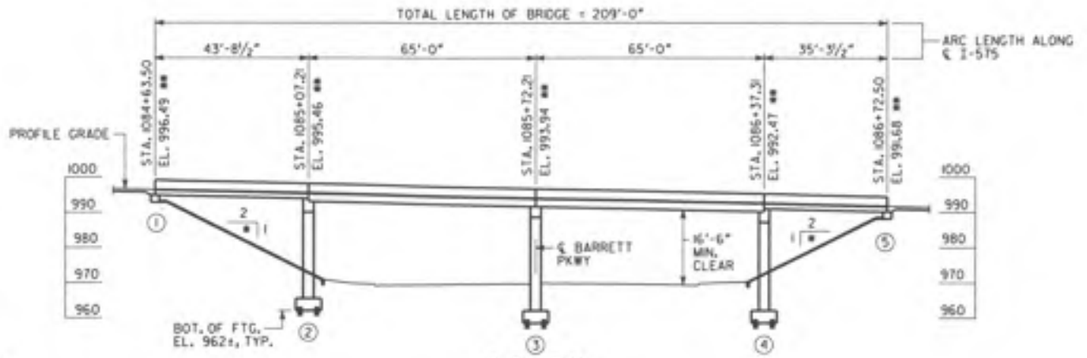

ELEVATION
SCALE: 1" = 20'-0"

DESIGN DATA

SPECIFICATIONS ---------- AASHTO 17TH EDITION, 2002
(DESIGNED FOR SEISMIC PERFORMANCE CATEGORY A)
TYPICAL HS20-44 AND/OR MILITARY LOADING --- IMPACT ALLOWED
FUTURE PAVING ALLOWANCE ---------- 30 LBS PER SQ FT

WIDENED BRIDGE CONSISTS OF

1 - 43'-8½" PSC 17" BEAM SPAN ---------- SPECIAL DESIGN
2 - 65'-0" PSC 27" BEAM SPANS ---------- SPECIAL DESIGN
1 - 35'-3½" PSC 17" BEAM SPAN ---------- SPECIAL DESIGN
2 - PILE END BENTS ---------- SPECIAL DESIGN
3 - CONCRETE INTERMEDIATE BENTS ---------- SPECIAL DESIGN

UTILITIES UNDER BRIDGE

16" WATER MAIN
6" STEEL GAS MAIN
6 DUCT TELEPHONE CONDUIT
TRAFFIC CONTROLS

EXISTING RIGHT BRIDGE SERIAL NO. 067-0111-0
EXISTING RIGHT BRIDGE I.D. NO. 067-0041D-001.22 N
PROJECT P.I. NO. 713640

BRIDGE NO. 35

ABBAS ENGEISH-METHODS	11/20/09	
DRAWN BY	DATE	
CHECKED BY	DATE	
SUPERVISOR	DATE	
APPROVED	DATE	

REVISIONS

NO	DATE	DESCRIPTION	DRIG	CHKR	SUPV	APPR
A	6/30/09	Progress Drawings (50 % Review 2)	AEM	JCR	GLE	SJL
B	9/25/09	50% SUBMISSION	AEM	JCR	GLE	SJL
C	11/30/09	PLOTTED PER GDOT'S TERMINATION FOR CONVENIENCE DIRECTION	AEM			

GTP Georgia Transportation Partners

NORTHWEST I-75/I-575 CORRIDOR

DEPARTMENT OF TRANSPORTATION
STATE OF GEORGIA

JBT J.B. Trimble, Inc.
2550 Heritage Ct. SE Suite 250
Atlanta GA 30339-3062
(770) 952-1022

BRIDGE SHEET 1 OF 6

I-75 / I-575 NORTHWEST CORRIDOR

I-575 REVERSIBLE OVER BARRETT PKWY

PLAN AND ELEVATION

COBB COUNTY NH000-0575-01(028)

DRAWING NO. 35-1

STATE	PROJECT NUMBER	SHEET NO.	TOTAL SHEETS
GA	NH000-0575-01(028)		

R = RADIAL DIMENSION

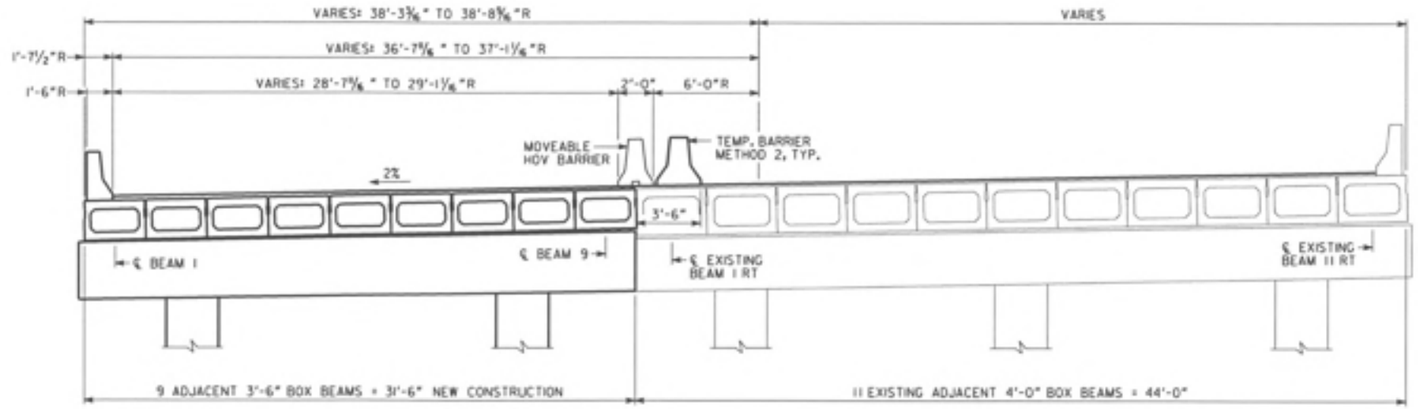

TYPICAL SECTION
(LOOKING AHEAD, RIGHT BRIDGE)

CONSTRUCTION SEQUENCE

1. PLACE TEMPORARY BARRIER, MAINTAIN TWO 12'-0" LANES OF TRAFFIC IN EACH DIRECTION ON EXISTING BRIDGES.
2. REMOVE PORTIONS OF EXISTING NORTH BOUND BRIDGE AS NECESSARY FOR NEW CONSTRUCTION.
3. CONSTRUCT NEW SUBSTRUCTURE.
4. CONSTRUCT NEW SUPERSTRUCTURE.

NOTE ⊗ IMPORTANT NOTICE: THIS DRAWING IS AN INCOMPLETE WORK-IN-PROGRESS AND ITS USE IS SUBJECT TO NOTE 1 ON DRAWING NO. 1-01.

BRIDGE NO. 35

12/1/2009 08:03:21 PM

n:\data\255171\drawings\structural\br25\preliminary\barrett_CS.dgn

ABBAS ESHAGHI-MEYBODI	11/20/09	
DRAWN BY	DATE	
CHECKED BY	DATE	
SUPERVISOR	DATE	
APPROVED	DATE	

REVISIONS						
NO	DATE	DESCRIPTION	ORIG	CHKR	SUPV	APPR
A	6/30/09	Progress Drawings ISO 11 Revision 21	AEM	JCR	GLE	SJL
B	9/25/09	SDL SUBMISSION	AEM	JCR	GLE	SJL
C	11/30/09	PLOTTED PER GDOT'S TERMINATION FOR CONVENIENCE DIRECTION	AEM			

GTP Georgia Transportation Partners

NORTHWEST I-75/I-575 CORRIDOR

DEPARTMENT OF TRANSPORTATION
STATE OF GEORGIA

JBT J.B. Trimble, Inc.
2550 Heritage Ct, SE Suite 250
Atlanta GA 30339-3062
(770) 952-1022

BRIDGE SHEET 2 OF 6

I-75 / I-575 NORTHWEST CORRIDOR

I-575 REVERSIBLE OVER BARRETT PKWY

CONSTRUCTION SEQUENCE

COBB COUNTY NH000-0575-01(028)

DRAWING NO. 35-2

STATE	PROJECT NUMBER	SHEET NO.	TOTAL SHEETS
GA	NH000-0575-01(028)		

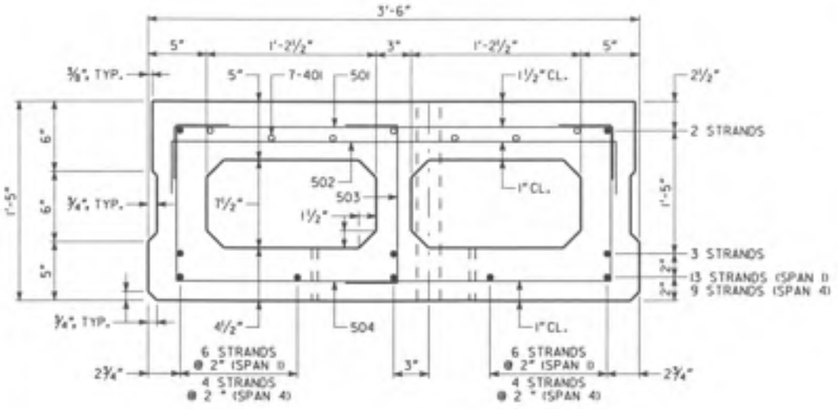

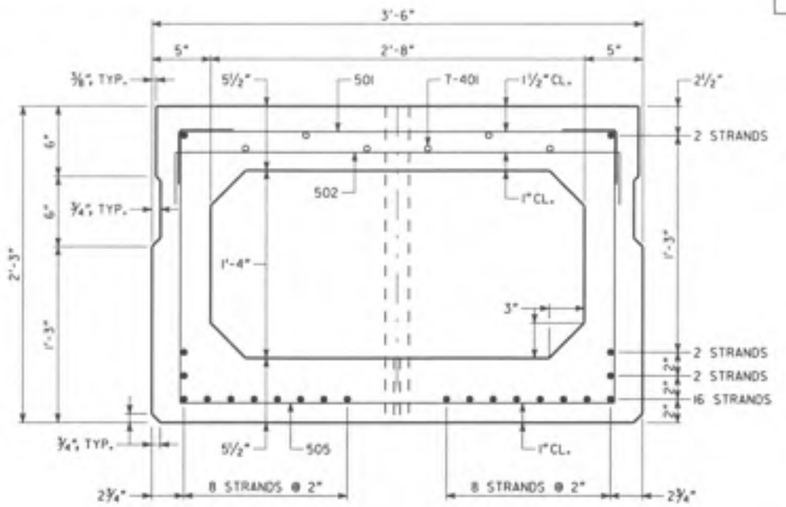

NOTES:

1. MAINTAIN 2"CL. ON ALL REINFORCEMENT UNLESS OTHERWISE NOTED.

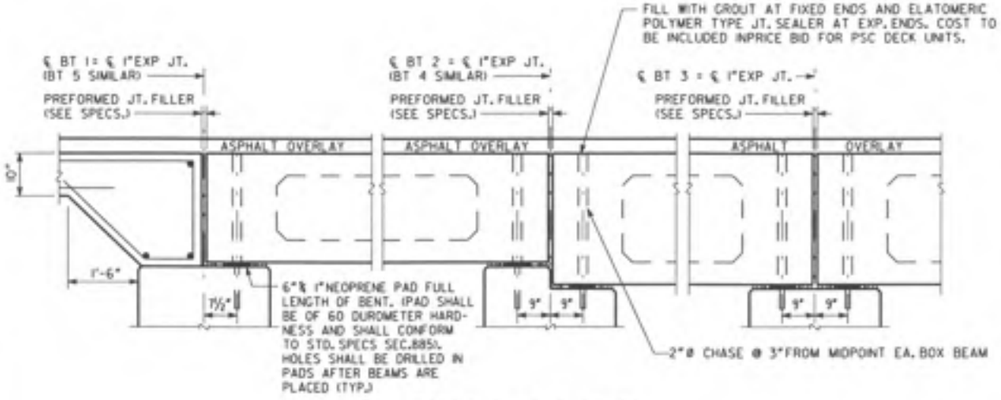

SECTIONS AT ℄ BENTS

REINFORCEMENT

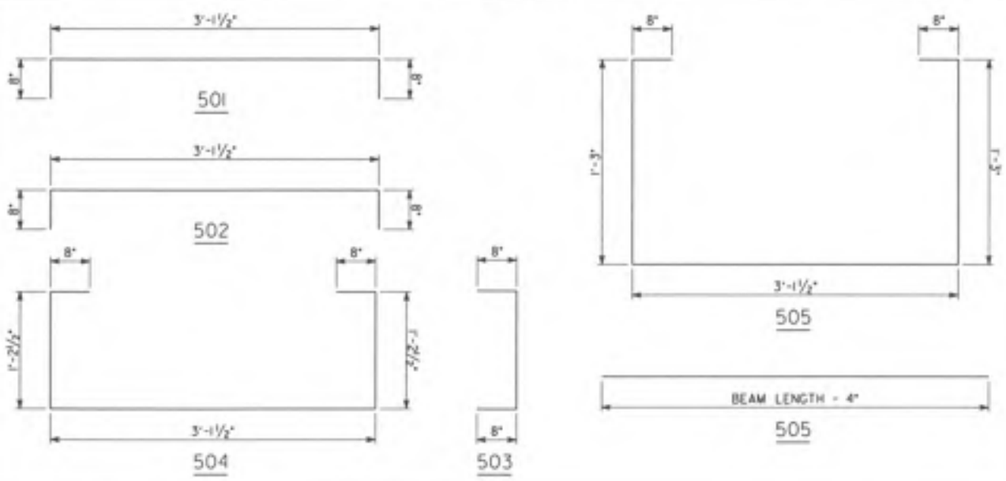

SPAN	BEAM TYPE	NUMBER OF BEAMS	BEAMS SPACING	AVERAGE BEAM LENGTH	RELEASE CONCRETE STRENGTH (℄)	FINAL CONCRETE STRENGTH (℄)	STRAND TYPE	TOTAL NUMBER OF STRANDS	NUMBER OF RAISED STRANDS	1"ø TIE ROD LENGTH
1	17"PSC BOX	9	3'-6"	43'-8½"	4500 PSI	6500 PSI	½"SPECIAL	18	0	31'-6"
2 & 3	27"PSC BOX	18	3'-6"	65'-0"	4500 PSI	6500 PSI	½"SPECIAL	22	0	189'-0"
4	17"PSC BOX	9	3'-6"	35'-3½"	4500 PSI	5000 PSI	½"SPECIAL	14	0	31'-6"

NOTE ⊗ IMPORTANT NOTICE: THIS DRAWING IS AN INCOMPLETE WORK-IN-PROGRESS AND ITS USE IS SUBJECT TO NOTE 1 ON DRAWING NO. 1-01.

BRIDGE NO. 35

ABBAS ENHANCED METHOD — 11/20/09 DATE
DRAWN BY — DATE
CHECKED BY — DATE
SUPERVISOR — DATE
APPROVED — DATE

REVISIONS

NO	DATE	DESCRIPTION	DRIG	CHKR	SUPV	APPR
A	6/30/09	Progress Drawings (SD 11 Revision 21	AEM	JCR	GLT	S.B.
B	9/25/09	SDS SUBMISSION	AEM	JCR	GLT	S.B.
C	11/30/09	PLOTTED PER CDOT'S TERMINATION FOR CONVENIENCE DIRECTION	AEM			

GTP Georgia Transportation Partners

NORTHWEST I-75/I-575 CORRIDOR

DEPARTMENT OF TRANSPORTATION
STATE OF GEORGIA

JBT J.B. Trimble, Inc.
2550 Heritage Ct. SE Suite 250
Atlanta GA 30339-3062
(770) 952-1022

BRIDGE SHEET 3 OF 6

I-75 / I-575 NORTHWEST CORRIDOR

I-575 REVERSIBLE OVER BARRETT PKWY
PSC BOX BEAM DETAILS

COBB COUNTY — NH000-0575-01(028) — DRAWING NO. 35-3

m:\gra\250517\dgn\str\sc\br35\preliminary\Barrett_BM.dgn 12/1/2009 08:35 PM

STATE	PROJECT NUMBER	SHEET NO.	TOTAL SHEETS
GA	NH000-0575-01(028)		

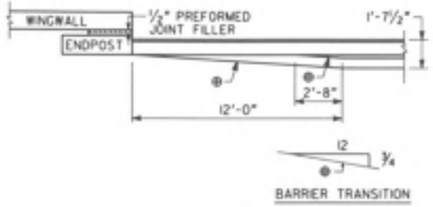

BARRIER TRANSITION DETAIL

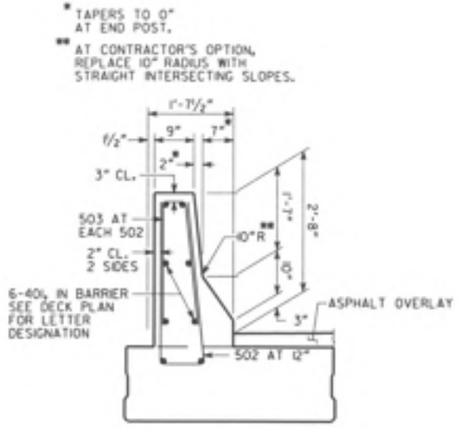

BARRIER DETAIL

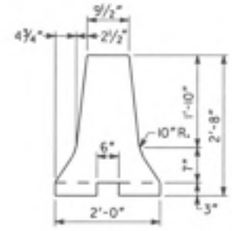

HOV BARRIER DETAIL

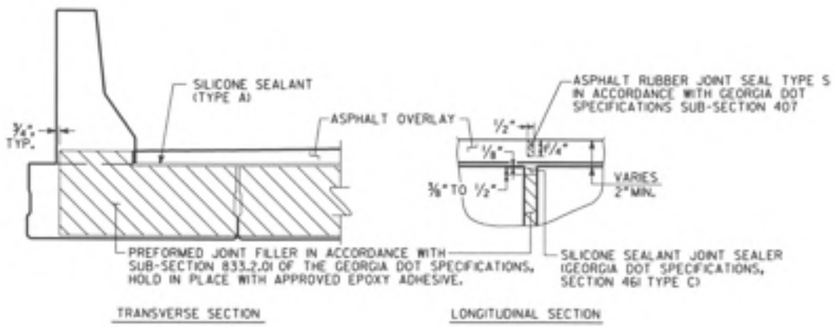

DETAIL OF 1" EXPANSION JOINT AT ℄ JOINT

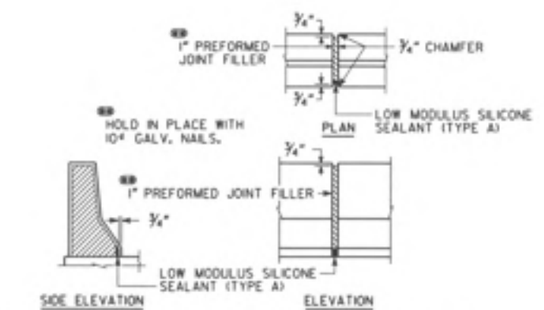

DETAILS OF 1" EXPANSION JOINT IN BARRIER

NOTE ‼ IMPORTANT NOTICE: THIS DRAWING IS AN INCOMPLETE WORK-IN-PROGRESS AND ITS USE IS SUBJECT TO NOTE 1 ON DRAWING NO. 1-01.

BRIDGE NO. 35

ABBAS ESHAGHI-MEYBODI 11/20/09
DRAWN BY DATE
CHECKED BY DATE
SUPERVISOR DATE
APPROVED DATE

REVISIONS							
NO	DATE	DESCRIPTION	ORIG	CHKR	SUPV	APPR
A	6/30/09	Progress Drawings (50 % Revision 2)	AEM	JCR	GLE	SJL
B	9/25/09	50% SUBMISSION	AEM	JCR	GLE	SJL
C	11/30/09	PLOTTED PER GDOT'S TERMINATION FOR CONVENIENCE DIRECTION	AEM			

GTP Georgia Transportation Partners

NORTHWEST I-75/I-575 CORRIDOR

DEPARTMENT OF TRANSPORTATION
STATE OF GEORGIA

JBT J.B. Trimble, Inc.
2550 Heritage Ct, SE Suite 250
Atlanta GA 30339-3062
(770) 952-1022

BRIDGE SHEET 4 OF 6

I-75 / I-575 NORTHWEST CORRIDOR

I-575 REVERSIBLE OVER BARRETT PKWY

MISCELLANEOUS DETAILS

COBB COUNTY NH000-0575-01(028)

DRAWING NO. 35- 4

STATE	PROJECT NUMBER	SHEET NO.	TOTAL SHEETS
GA	NH000-0575-01(028)		

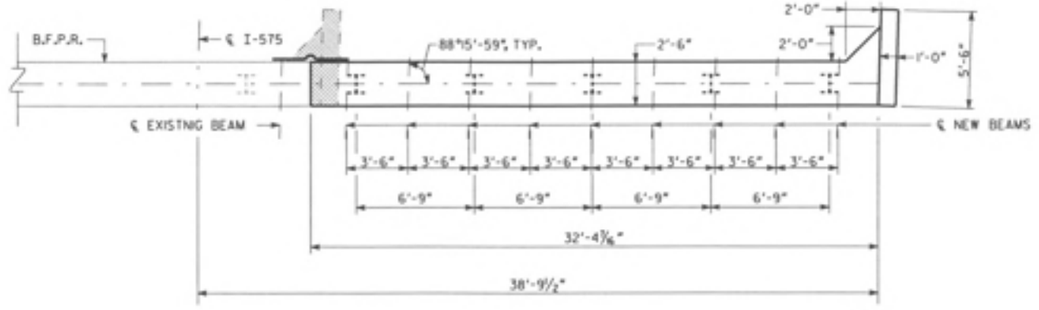

PLAN

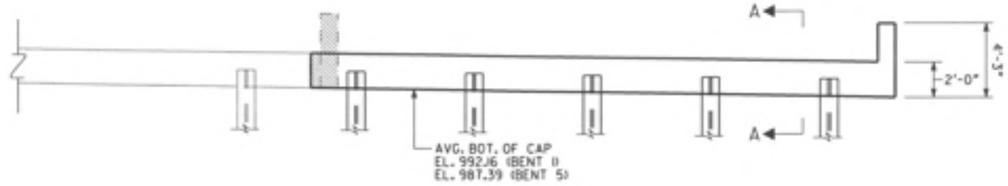

ELEVATION

BENT 1 LOOKING BACK
(BENT 5 SIMILAR)

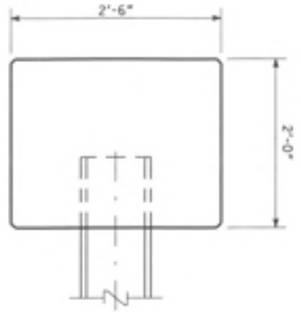

SECTION A-A

NO SCALE

NOTE:

1. MAINTAIN 2" CL. ON ALL REINFORCEMENT UNLESS OTHERWISE NOTED.

PLAN DRIVING OBJECTIVE

ALL PILES SHALL BE DRIVEN TO A DRIVING RESISTANCE OF 65 TONS AFTER AN ESTIMATED TIP ELEVATION SHOWN BELOW IS ACHIEVED

BENT	EST. TIP
1	912
7	924

ALL PILES SHALL BE STEEL H, HP 12 X 53

NOTE ⊗ IMPORTANT NOTICE: THIS DRAWING IS AN INCOMPLETE WORK-IN-PROGRESS AND ITS USE IS SUBJECT TO NOTE 1 ON DRAWING NO. 1-01.

BRIDGE NO. 35

ABBAS ESHAGHI-MEYBODI 10/20/09
DRAWN BY DATE
CHECKED BY DATE
SUPERVISOR DATE
APPROVED DATE

REVISIONS

NO	DATE	DESCRIPTION	ORIG	CHKR	SUP'R	APPR
A	6/30/09	Progress Drawings (50 % Revision 2)	AEM	JCR	GLE	S.A.
B	9/25/09	50% SUBMISSION	AEM	JCR	GLE	S.A.
C	10/30/09	PLOTTED PER GDOT'S TERMINATION FOR CONVENIENCE DIRECTION	AEM			

GTP Georgia Transportation Partners

NORTHWEST I-75/I-575 CORRIDOR

DEPARTMENT OF TRANSPORTATION
STATE OF GEORGIA

JBT J.B. Trimble, Inc.
2550 Heritage Ct, SE Suite 250
Atlanta GA 30339-3062
(770) 952-1022

BRIDGE SHEET 5 OF 6

I-75 / I-575 NORTHWEST CORRIDOR

I-575 REVERSIBLE OVER BARRETT PKWY

END BENTS

COBB COUNTY NH000-0575-01(028)

DRAWING NO. 35-5

STATE	PROJECT NUMBER	SHEET NO.	TOTAL SHEETS
GA	NH000-0575-01(028)		

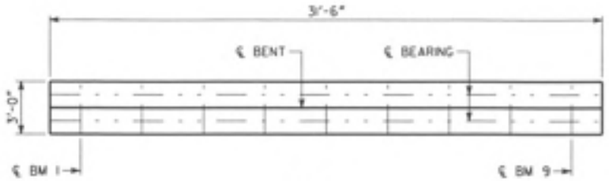

PLAN

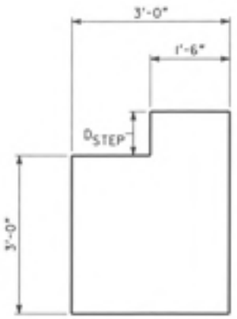

SECTION A-A

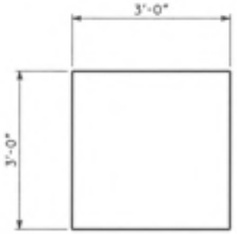

SECTION B-B

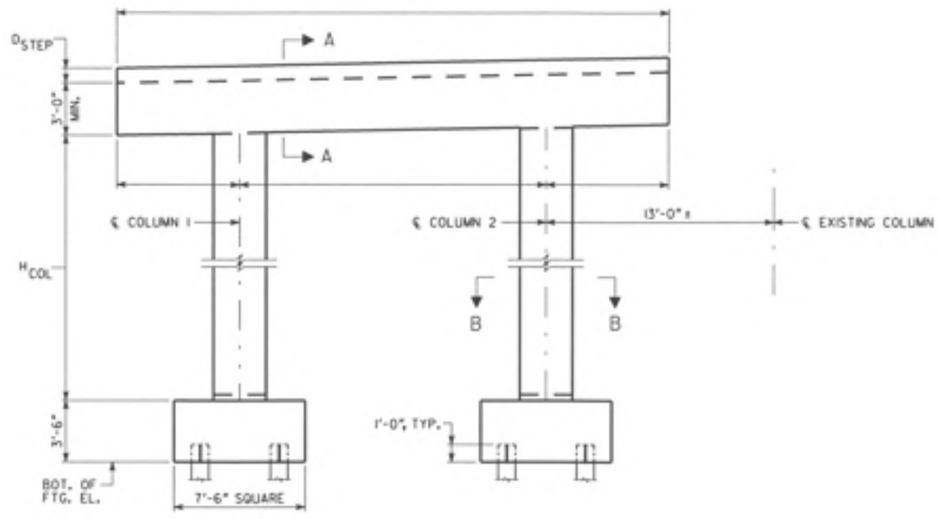

ELEVATION

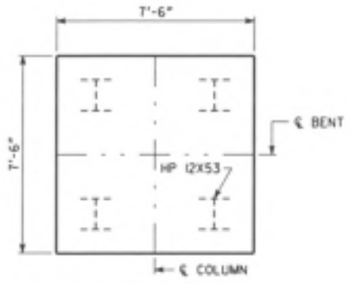

FOOTING LAYOUT

TABLE OF DIMENSIONS			
BENT	H_{COL}	D_{STEP}	BOT. OF FTG. EL.
2	24'-1"	10"	962
3	22'-7"	0	962
4	21'-1"	10"	962

NOTE:

1. MAINTAIN 2" CL. ON ALL REINFORCEMENT UNLESS OTHERWISE NOTED.

PLAN DRIVING OBJECTIVE

ALL PILES SHALL BE DRIVEN TO A DRIVING RESISTANCE OF 70 TONS AFTER AN ESTIMATED TIP ELEVATION SHOWN BELOW IS ACHIEVED

BENT	EST. TIP
2	915
3	926
4	920

ALL PILES SHALL BE STEEL H, HP 12 X 53

NOTE ⊕ IMPORTANT NOTICE: THIS DRAWING IS AN INCOMPLETE WORK-IN-PROGRESS AND ITS USE IS SUBJECT TO NOTE 1 ON DRAWING NO. 1-01.

BRIDGE NO. 35

ABBAS ESHAGH-MEYBODI 11/20/09
DRAWN BY DATE
CHECKED BY DATE
SUPERVISOR DATE
APPROVED DATE

REVISIONS						
NO	DATE	DESCRIPTION	DRIG	CHKR	SUPV	APPR
A	6/30/09	Progress Drawings (50 % Revision 2)	ABM	JCR	GLE	SJL
B	9/25/09	SOIL SUBMISSION	ABM	JCR	GLE	SJL
C	11/30/09	PLOTTED PER GDOT'S TERMINATION FOR CONVENIENCE DIRECTION	ABM			

GTP Georgia Transportation Partners

NORTHWEST I-75/I-575 CORRIDOR

DEPARTMENT OF TRANSPORTATION
STATE OF GEORGIA

JBT J.B. Trimble, Inc.
2550 Heritage Ct, SE Suite 250
Atlanta GA 30339-3062
(770) 952-1022

BRIDGE SHEET 6 OF 6

I-75 / I-575 NORTHWEST CORRIDOR

I-575 REVERSIBLE OVER BARRETT PKWY
INTERMEDIATE BENTS

COBB COUNTY NH000-0575-01(028)

DRAWING NO. 35- 6

STATE	PROJECT NUMBER	SHEET NO.	TOTAL SHEETS
GA	NH000-0575-01(028)		

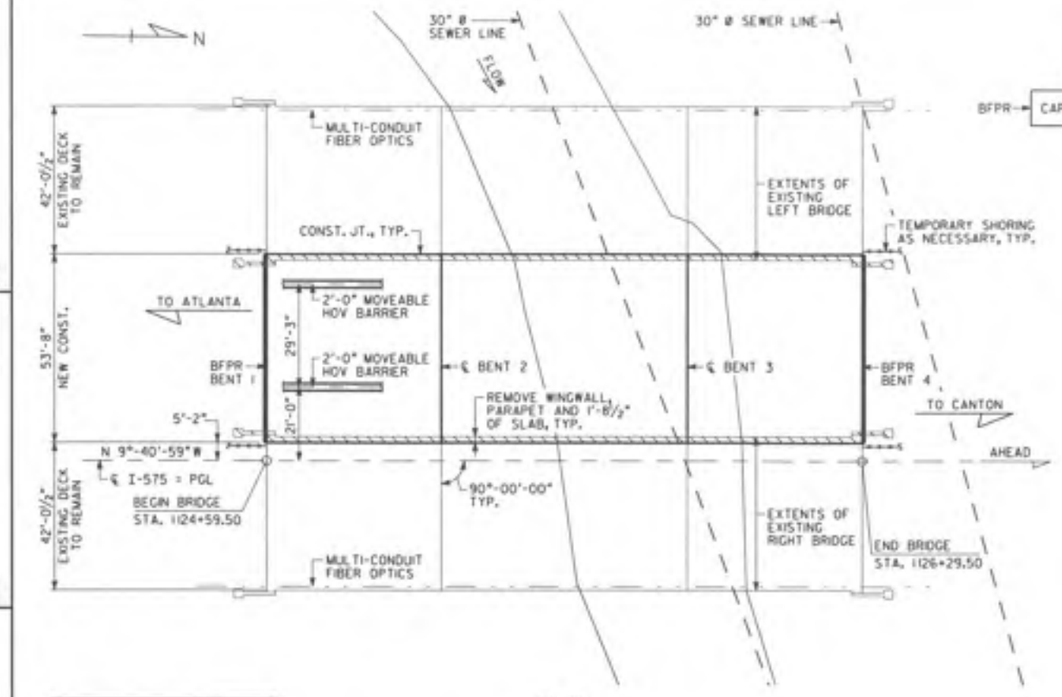

PLAN
SCALE: 1" = 20'-0"

PLACE RIPRAP AND FILTER FABRIC FROM 2 FT. BELOW ORIGINAL GROUND TO 2 FT. ABOVE FLOODSTAGE ELEVATION. EXTEND RIPRAP AND FILTER FABRIC 20 FT. BEYOND END OF WINGWALLS UNLESS OTHERWISE NOTED. WHERE BERM ELEVATION IS LOWER THAN 2 FT. ABOVE FLOODSTAGE, EXTEND RIPRAP AND FILTER FABRIC ACROSS BERM.

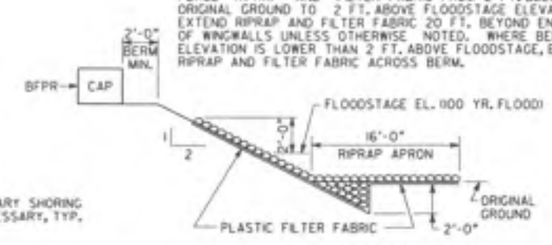

RIPRAP DETAIL
NO SCALE

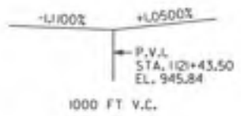

I-575 GRADE DATA

DESIGN DATA

SPECIFICATIONS ---------- AASHTO 17TH EDITION, 2002
(DESIGNED FOR SEISMIC PERFORMANCE CATEGORY A)
TYPICAL HS20-44 AND/OR MILITARY LOADING --- IMPACT ALLOWED
FUTURE PAVING ALLOWANCE ---------- 30 LBS PER SQ FT

WIDENED BRIDGE CONSISTS OF

2 - 50'-0" TYPE II PSC BEAM SPANS ---------- SPECIAL DESIGN
1 - 70'-0" TYPE II PSC BEAM SPAN ---------- SPECIAL DESIGN
2 - PILE END BENTS ---------- SPECIAL DESIGN
2 - CONCRETE INTERMEDIATE BENTS ---------- SPECIAL DESIGN
24" TYPE I RIP RAP

EXISTING UTILITIES ON BRIDGE

MULTI-CONDUIT FIBER OPTIC LINE

EXISTING UTILITIES UNDER BRIDGE

2 - 30" STEEL SANITARY SEWER LINES

BERM ELEVATIONS ⊛		
BENT	LEFT	RIGHT
1	942.40	942.40
4	943.81	943.81

⊛NOTE: FOR BRIDGE ENDROLL STAKING PURPOSES ONLY.

NOTES:

1. ** STATIONS ARE ALONG ℄ I-575 AT THE INTERSECTION OF ℄ I-575 AND BFPR OR ℄ BENT. ELEVATIONS ARE ALONG PGL.
2. END BENT PILES NOT SHOWN.
3. SEE SHEET 3 FOR PROPOSED DECK CROSS SLOPE.
4. REPAIR AND REPLACE EXISTING RIPRAP AS NEEDED. EXTEND APRON ACROSS TOE OF EXISTING SLOPES.
5. THE MINIMUM BOTTOM OF BEAM ELEVATION FOR THE PROPOSED BRIDGE SHALL BE NO LOWER THAN ELEVATION 932.56
6. THE PROPOSED BRIDGE BOTTOM OF BEAM ELEVATION IS 945.38
7. CONTRACTOR TO LOCATE EXISTING SEWER LINE PRIOR TO DRIVING PILES. INSTALL PILES TO ACCOMMODATE EXISTING SEWER LINE. PROTECT SEWER LINE AT ALL TIMES DURING CONSTRUCTION.

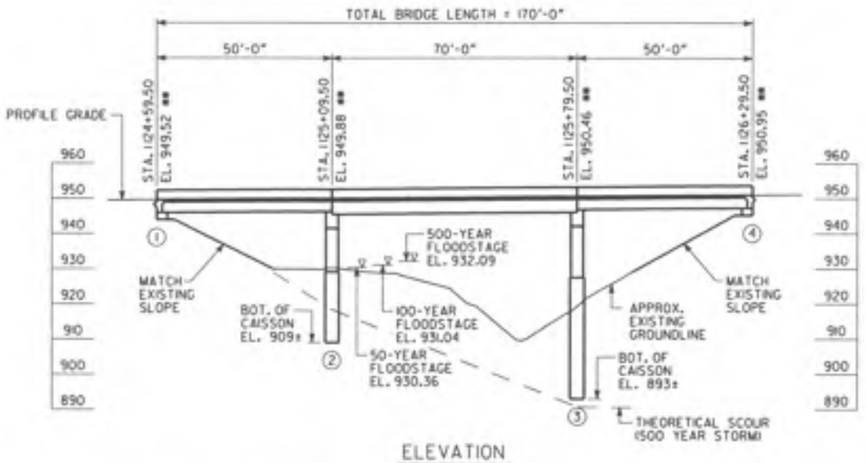

ELEVATION
SCALE: 1" = 20'-0"

DRAINAGE DATA

DRAINAGE AREA ---------- 12.8 SQ MI

FLOOD FREQUENCY	DISCHARGE THRU BRIDGE	MEAN VELOCITY	AREA OF OPENING UNDER FLOODSTAGE	BACKWATER
50 YEAR	6,665 CFS	12.87 FPS	518 SQ FT	3.45 FT
100 YEAR	7,649 CFS	13.27 FPS	576 SQ FT	3.94 FT
500 YEAR	9,444 CFS	13.50 FPS	699 SQ FT	4.75 FT

THEORETICAL SCOUR DEPTHS (FT)						
	100 YEAR STORM			500 YEAR STORM		
BENT LOCATION	GENERAL	LOCAL	TOTAL	GENERAL	LOCAL	TOTAL
BENT 2	1.0	10.0	11.0	1.0	10.4	11.4
BENT 3	14.1	10.0	24.1	18.2	10.4	28.6

EXISTING LEFT BRIDGE SERIAL NO. 067-0114-0
EXISTING LEFT BRIDGE I.D. NO. 067-0041T0-00L99N
EXISTING RIGHT BRIDGE SERIAL NO. 067-0113-0
EXISTING RIGHT BRIDGE I.D. NO. 067-0041T0-00L98N
PROJECT P.I. NO. 713640

BRIDGE NO. 36

ADAMS ENGINEERING REVISED	11/20/09
DRAWN BY	DATE
CHECKED BY	DATE
SUPERVISOR	DATE
APPROVED	DATE

REVISIONS

NO	DATE	DESCRIPTION	DRG	CHKR	SUPV	APPR
A	6/30/09	Progress Drawings (50 ii Revision 2)	AEW	JCR	GLE	SJL
B	9/25/09	SDC SUBMISSION	AEW	JCR	GLE	SJL
C	11/30/09	PLOTTED PER SDOT'S TERMINATION FOR CONVENIENCE DIRECTION	AEW	JCR	GLE	SJL

GTP Georgia Transportation Partners

NORTHWEST I-75/I-575 CORRIDOR

DEPARTMENT OF TRANSPORTATION
STATE OF GEORGIA

JBT J.B. Trimble, Inc.
2550 Heritage Ct, SE Suite 250
Atlanta GA 30339-3062
(770) 952-1022

BRIDGE SHEET 1 OF 6

I-75 / I-575 NORTHWEST CORRIDOR

I-575 REVERSIBLE OVER NOONDAY CREEK SOUTH
PLAN AND ELEVATION

COBB COUNTY NH000-0575-01(028)

DRAWING NO. 35-7

STATE	PROJECT NUMBER	SHEET NO.	TOTAL SHEETS
GA	NH000-0575-01(028)		

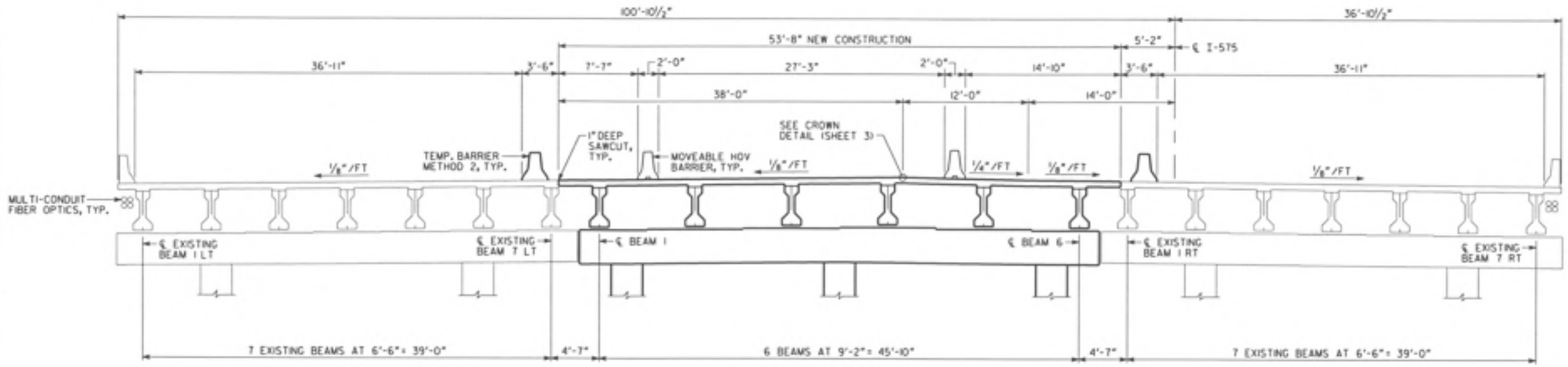

TYPICAL SECTION
(LOOKING AHEAD)

CONSTRUCTION SEQUENCE

1. PLACE TEMPORARY BARRIER, MAINTAIN TWO 12'-0" LANES OF TRAFFIC IN EACH DIRECTION ON EXISTING BRIDGES.
2. REMOVE PORTIONS OF EXISTING BRIDGES AS NECESSARY FOR NEW CONSTRUCTION.
3. CONSTRUCT NEW SUBSTRUCTURE.
4. CONSTRUCT NEW SUPERSTRUCTURE.

NOTE 1: IMPORTANT NOTICE! THIS DRAWING IS AN INCOMPLETE WORK-IN-PROGRESS AND ITS USE IS SUBJECT TO NOTE 1 ON DRAWING NO. 1-01.

BRIDGE NO. 36

ABBAS ESHAGHI-HEYRODI	11/20/09	
Drawn BY	DATE	
CHECKED BY	DATE	
SUPERVISOR	DATE	
APPROVED	DATE	

REVISIONS

NO	DATE	DESCRIPTION	DRIC	CHKR	SUPV	APPR
A	6/30/09	Progress Drawings (50 % Revision 2)	AEM	JCR	GLE	SJL
B	9/25/09	SOIL SUBMISSION	AEM	JCR	GLE	SJL
C	11/30/09	PLOTTED PER GDOT'S TERMINATION FOR CONVENIENCE DIRECTION	AEM	JCR	GLE	SJL

GTP Georgia Transportation Partners

NORTHWEST I-75/I-575 CORRIDOR

DEPARTMENT OF TRANSPORTATION
STATE OF GEORGIA

JBT J.B. Trimble, Inc.
2550 Heritage Ct, SE Suite 250
Atlanta GA 30339-3062
(770) 952-1022

BRIDGE SHEET 2 OF 6

I-75 / I-575 NORTHWEST CORRIDOR

I-575 REVERSIBLE OVER NOONDAY CREEK SOUTH
CONSTRUCTION SEQUENCE

COBB COUNTY NH000-0575-01(028)

DRAWING NO. 35-8

STATE	PROJECT NUMBER	SHEET NO.	TOTAL SHEETS
GA	NH000-0575-01(028)		

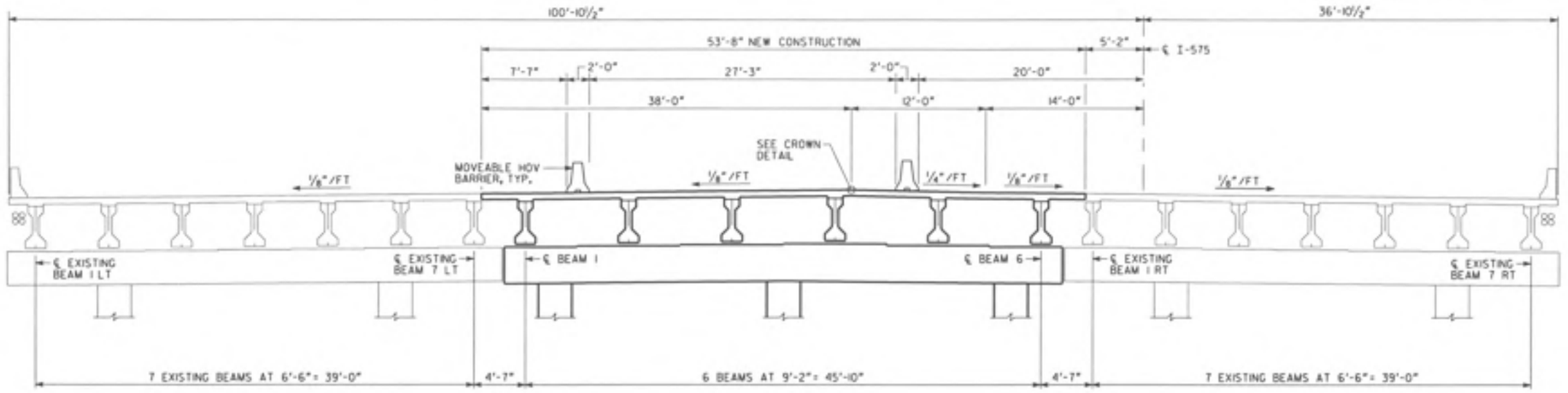

DECK SECTION
(LOOKING AHEAD)

SPAN	AVERAGE DECK WIDTH	BEAM TYPE	NUMBER OF BEAMS	BEAMS	SLAB THICKNESS	BEAMS SPACING	AVERAGE BEAM LENGTH	RELEASE CONCRETE STRENGTH (f'ci)	FINAL CONCRETE STRENGTH (f'c)	STRAND TYPE	TOTAL NUMBER OF STRANDS	NUMBER OF RAISED STRANDS	HEIGHT OF RAISED STRANDS
1	53'-8"	TYPE II	6	1-6	8½"	9'-2"	48'-8"	5,300 PSI	5,500 PSI	½"ϕ SPECIAL	20	0	0'-0"
2	53'-8"	TYPE III	6	1-6	8⅜"	9'-2"	69'-2"	5,000 PSI	5,500 PSI	½"ϕ SPECIAL	30	6	1'-11"
3	53'-8"	TYPE II	6	1-6	8½"	9'-2"	48'-8"	5,300 PSI	5,500 PSI	½"ϕ SPECIAL	20	0	0'-0"

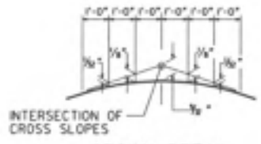

CROWN DETAIL

NOTES:

1. MAINTAIN 2" CLEARANCE ON ALL REINFORCEMENT UNLESS OTHERWISE NOTED.
2. CARE SHALL BE EXERCISED IN REMOVAL OF EXISTING CONCRETE AND RETAIN EXISTING REINFORCEMENT. EXISTING REINFORCEMENT BARS TO BE SPLICED A MINIMUM OF 2'-6". ANY EXISTING REINFORCEMENT STEEL DAMAGED DURING REMOVAL SHALL BE REPLACED BY THE CONTRACTOR AT NO ADDITIONAL COST.
3. NON-CONTACT LAPS MAY BE USED BETWEEN EXISTING AND NEW TRANSVERSE DECK BARS.

NOTE ⊞ IMPORTANT NOTICE: THIS DRAWING IS AN INCOMPLETE WORK-IN-PROGRESS AND ITS USE IS SUBJECT TO NOTE 1 ON DRAWING NO. 1-01.

BRIDGE NO. 36

ABBAS ESHAGHI-MEYBODI 11/20/09
DRAWN BY DATE
CHECKED BY DATE
SUPERVISOR DATE
APPROVED DATE

REVISIONS						
NO	DATE	DESCRIPTION	ORIG	CHKR	SUPV	APPR
A	6/30/09	Progress Drawings ISD 11 Revision 21	AEM	JCR	GLE	S.A.
B	9/25/09	SDI SUBMISSION	AEM	JCR	GLE	S.A.
C	11/30/09	PLOTTED PER GDOT'S TERMINATION FOR CONVENIENCE DIRECTION	AEM	JCR	GLE	S.A.

GTP Georgia Transportation Partners

NORTHWEST I-75/I-575 CORRIDOR

DEPARTMENT OF TRANSPORTATION
STATE OF GEORGIA

JBT J.B. Trimble, Inc.
2550 Heritage Ct, SE Suite 250
Atlanta GA 30339-3062
(770) 952-1022

BRIDGE SHEET 3 OF 6

I-75 / I-575 NORTHWEST CORRIDOR

I-575 REVERSIBLE OVER NOONDAY CREEK SOUTH
DECK SECTION

COBB COUNTY NH000-0575-01(028)

DRAWING NO. 35-9

n:\ar\259517\drawings\structs\35\profdunnary\Noonday3_05.dgn 12/1/2009 1:45:02 PM

STATE	PROJECT NUMBER	SHEET NO.	TOTAL SHEETS
GA	NH000-0575-01(028)		

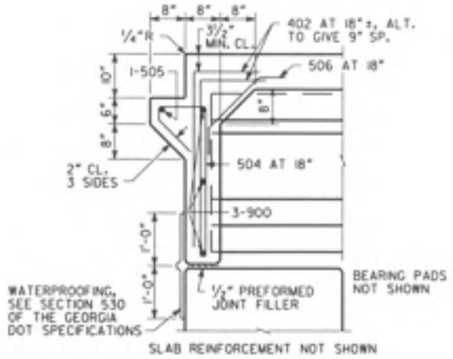

SECTION AT ENDWALL

(BENT 1)

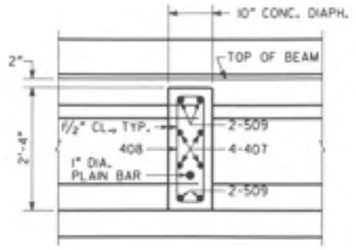

SLAB REINFORCEMENT NOT SHOWN

SECTION THRU DIAPHRAGM

(SPANS 1 & 3)

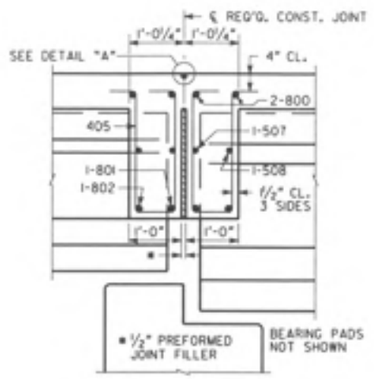

SLAB REINFORCEMENT NOT SHOWN

SECTION THRU EDGE BEAM

(BENT 2, BENT 3 SIMILAR)

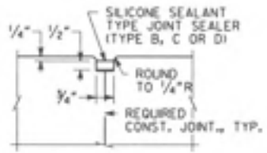

DETAIL "A"

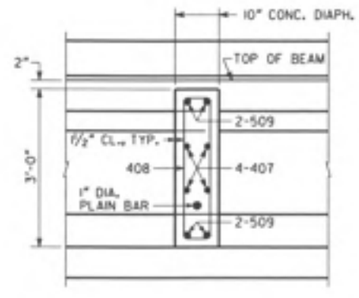

SLAB REINFORCEMENT NOT SHOWN

SECTION THRU DIAPHRAGM

(SPAN 2)

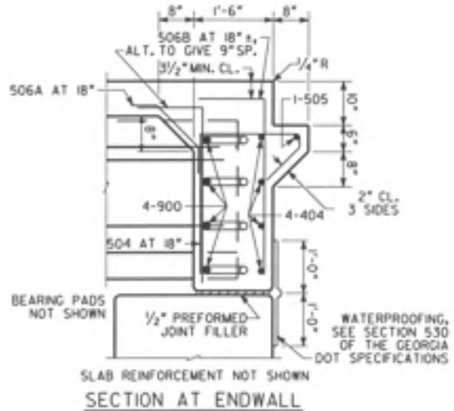

SECTION AT ENDWALL

(BENT 4)

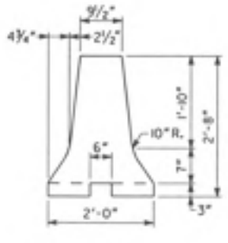

HOV BARRIER DETAIL

NOTE II IMPORTANT NOTICE: THIS DRAWING IS AN INCOMPLETE WORK-IN-PROGRESS AND ITS USE IS SUBJECT TO NOTE I ON DRAWING NO. I-01.

BRIDGE NO. 36

ABBAS ESHAGHI-MEYBODI	11/20/09	
Drawn BY	DATE	
CHECKED BY	DATE	
SUPERVISOR	DATE	
APPROVED	DATE	

REVISIONS

NO	DATE	DESCRIPTION	ORIG	CHKR	SUPV	APPR
A	6/30/09	Progress Drawings (50 % Revision 2)	AEM	JCR	GLE	SJL
B	9/25/09	SDC SUBMISSION	AEM	JCR	GLE	SJL
C	11/30/09	PLOTTED PER GDOT'S TERMINATION FOR CONVENIENCE DIRECTION	AEM	JCR	GLE	SJL

GTP Georgia Transportation Partners

NORTHWEST I-75/I-575 CORRIDOR

DEPARTMENT OF TRANSPORTATION
STATE OF GEORGIA

JBT J.B. Trimble, Inc.
2550 Heritage Ct, SE Suite 250
Atlanta GA 30339-3062
(770) 952-1022

BRIDGE SHEET 4 OF 6

I-75 / I-575 NORTHWEST CORRIDOR

I-575 REVERSIBLE OVER NOONDAY CREEK SOUTH

MISCELLANEOUS DETAILS

COBB COUNTY NH000-0575-01(028)

DRAWING NO. 35-10

n:\work\2007\Proawings\structs\35\proliminary\Noonday5_MS.dgn 12/1/2009 1:45:17 PM

STATE	PROJECT NUMBER	SHEET NO.	TOTAL SHEETS
GA	NH000-0575-01(028)		

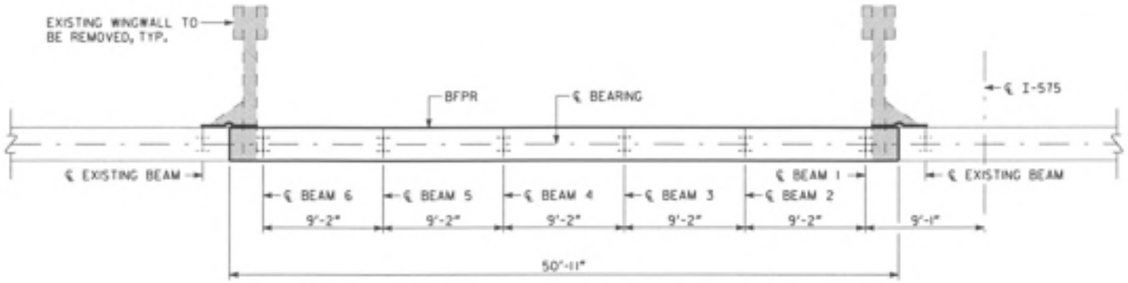

PLAN

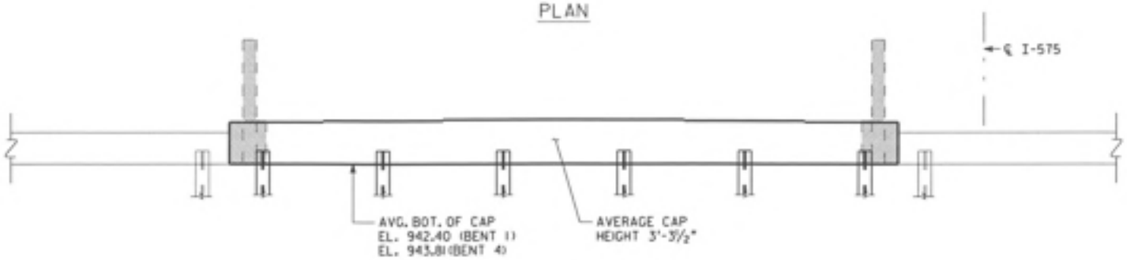

ELEVATION
BENT 1 LOOKING BACK
(BENT 4 SIMILAR)

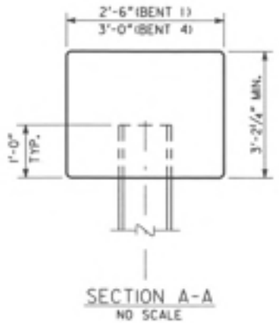

SECTION A-A
NO SCALE

NOTE:

1. MAINTAIN 2" CL. ON ALL REINFORCEMENT UNLESS OTHERWISE NOTED.

PLAN DRIVING OBJECTIVE

ALL PILES SHALL BE DRIVEN TO A DRIVING RESISTANCE OF 67 TONS AFTER AN ESTIMATED TIP ELEVATION SHOWN BELOW IS ACHIEVED

BENT	EST. TIP
1	906
4	890

ALL PILES SHALL BE STEEL H, HP 12 X 53

NOTE ⊞ IMPORTANT NOTICE: THIS DRAWING IS AN INCOMPLETE WORK-IN-PROGRESS AND ITS USE IS SUBJECT TO NOTE 1 ON DRAWING NO. 1-01.

BRIDGE NO. 36

ABBAS ESNAGER-MEYROU	11/20/09	
DRAWN BY	DATE	
CHECKED BY	DATE	
SUPERVISOR	DATE	
APPROVED	DATE	

REVISIONS

NO	DATE	DESCRIPTION	DRG	CHKR	SUPV	APPR
A	6/30/09	Progress Drawings (50 11 Revision 2)	AEM	JCR	GLE	SJL
B	9/25/09	SOI SUBMISSION	AEM	JCR	GLE	SJL
C	11/30/09	PLOTTED PER CDOT'S TERMINATION FOR CONVENIENCE DIRECTION	AEM	JCR	GLE	SJL

GTP Georgia Transportation Partners

NORTHWEST I-75/I-575 CORRIDOR

DEPARTMENT OF TRANSPORTATION
STATE OF GEORGIA

JBT J.B. Trimble, Inc.
2550 Heritage Ct, SE Suite 250
Atlanta GA 30339-3062
(770) 952-1022

BRIDGE SHEET 5 OF 6

I-75 / I-575 NORTHWEST CORRIDOR

I-575 REVERSIBLE OVER NOONDAY CREEK SOUTH END BENTS

COBB COUNTY NH000-0575-01(028)

DRAWING NO. 35-11

n:\trans\2551\Public\engineering\structures\36-Preliminary\Noonday5_EB.dgn 12/1/2009 1:05:22 PM

STATE	PROJECT NUMBER	SHEET NO.	TOTAL SHEETS
GA	NH000-0575-01(028)		

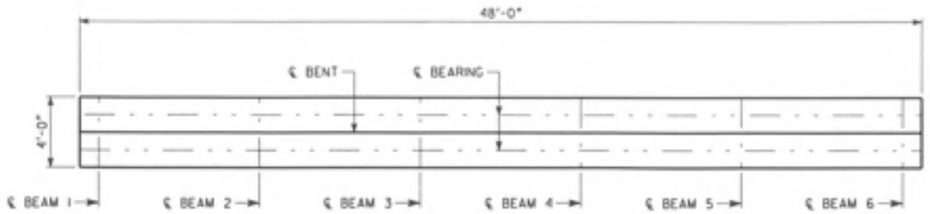

PLAN

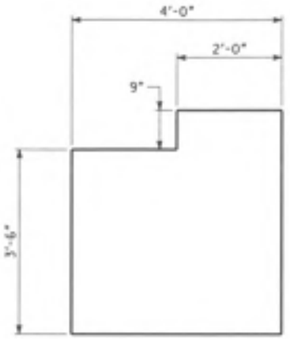

SECTION A-A
(NO SCALE)

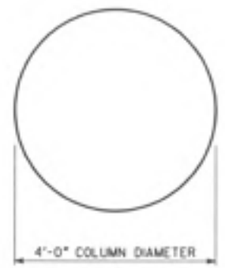

SECTION B-B
(NO SCALE)

SECTION C-C
(NO SCALE)

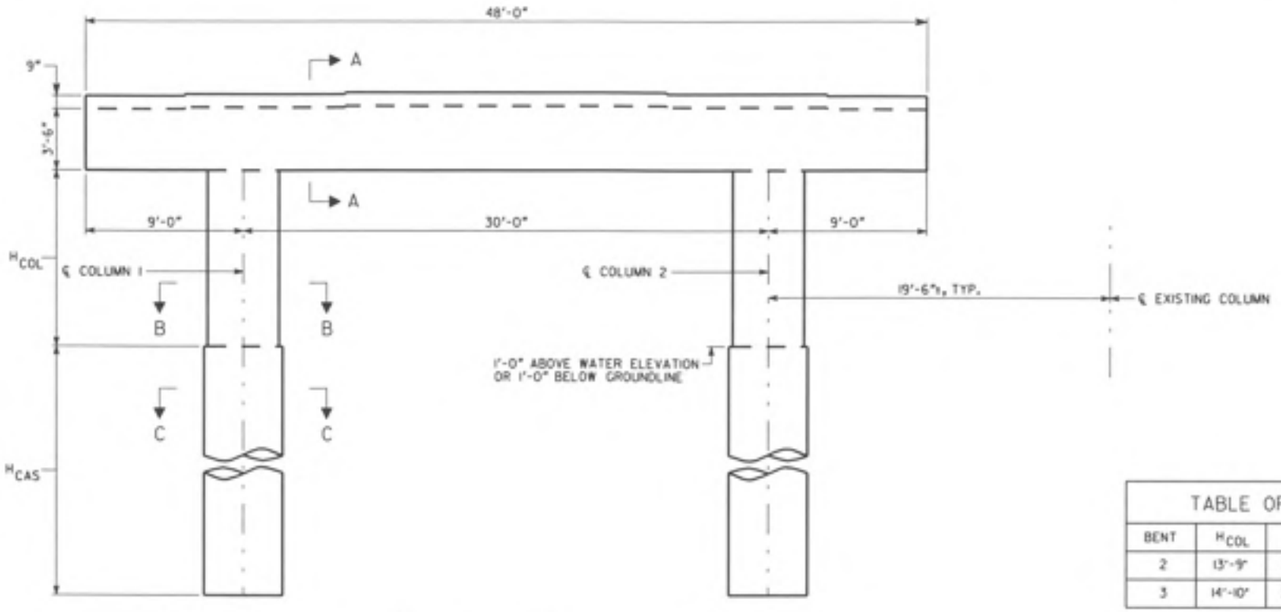

ELEVATION

TABLE OF DIMENSIONS			
BENT	H_{COL}	H_{CAS}	BOT. OF CAISS. EL.
2	13'-9"	19'-0"	909
3	14'-10"	34'-6"	893

CAISSON NOTES:

1. CONCRETE FOR DRILLED CAISSONS SHALL BE CLASS AA (f'c = 3500 PSI).
2. DRILLED CAISSONS ARE DESIGNED FOR AN ALLOWABLE BEARING PRESSURE OF 100 KSF ON SOUND ROCK.
3. DRILLED CAISSONS SHALL EXTEND A MINIMUM DEPTH OF 1'-0" INTO SOUND ROCK.
4. PERMANENT CASINGS SHALL BE REQUIRED TO CONSTRUCT DRILLED CAISSONS.
5. CUT OFF PERMANENT CASING AT GROUND LINE OR WATER SURFACE WHICHEVER IS HIGHER.
6. MINIMUM LAP SPLICE FOR #11 CAISSON REINFORCEMENT SHALL BE 9'-0". COST OF REINFORCEMENT REQUIRED FOR A LAP SPLICE SHALL BE INCLUDED IN THE PRICE BID FOR LF DRILLED CAISSON.
7. LIMIT OF PAYMENT FOR CAISSON SHALL BE THE TOP OF CAISSON.
8. SPIRALS SHALL BE TWO (2) CLOSED TURNS AT THE TOP AND BOTTOM OF CAISSONS. SPIRAL SPLICES SHALL BE ACCOMPLISHED BY LAPPING AND WELDING 1.5 TURNS. AT THE CONTRACTOR'S OPTION, #4 HOOP STIRRUPS WITH 2'-0" LAP AT 6" SPACING MAY BE SUBSTITUTED FOR SPIRAL IN CAISSON AT NO ADDITIONAL COST TO THE DEPARTMENT.
9. THE BOTTOM OF DRILLED SHAFTS MUST BE INSPECTED BY THE PROJECT GEOTECHNICAL ENGINEER.

NOTE:

1. MAINTAIN 2" CL. ON ALL REINFORCEMENT UNLESS OTHERWISE NOTED.

NOTE !! IMPORTANT NOTICE!! THIS DRAWING IS AN INCOMPLETE WORK-IN-PROGRESS AND ITS USE IS SUBJECT TO NOTE 1 ON DRAWING NO. 1-01.

BRIDGE NO. 36

ABBAS ESHAGHI-HEYDARI	11/20/09	
DRAWN BY	DATE	
CHECKED BY	DATE	
SUPERVISOR	DATE	
APPROVED	DATE	

REVISIONS

NO	DATE	DESCRIPTION	DRG	CHKR	SUPV	APPR
A	6/30/09	Progress Drawings (50 % Revision 2)	AEM	JDR	GLE	SJL
B	9/25/09	50% SUBMISSION	AEM	JDR	GLE	SJL
C	11/30/09	PLOTTED PER GDOT'S TERMINATION FOR CONVENIENCE DIRECTION	AEM	JDR	GLE	SJL

GTP Georgia Transportation Partners

NORTHWEST I-75/I-575 CORRIDOR

DEPARTMENT OF TRANSPORTATION
STATE OF GEORGIA

JBT J.B. Trimble, Inc.
2550 Heritage Ct. SE Suite 250
Atlanta GA 30339-3062
(770) 952-1022

BRIDGE SHEET
6 OF 6

I-75 / I-575 NORTHWEST CORRIDOR

I-575 REVERSIBLE OVER NOONDAY CREEK SOUTH
INTERMEDIATE BENTS

COBB COUNTY NH000-0575-01(028)

DRAWING NO. 35-12

12/1/2009 1:08:05 PM
n:\ro-s\255\17\drawings\structure\br36\preliminary\Noonday5_BT.dgn

STATE	PROJECT NUMBER	SHEET NO.	TOTAL SHEETS
GA	NH000-0575-01(028)		

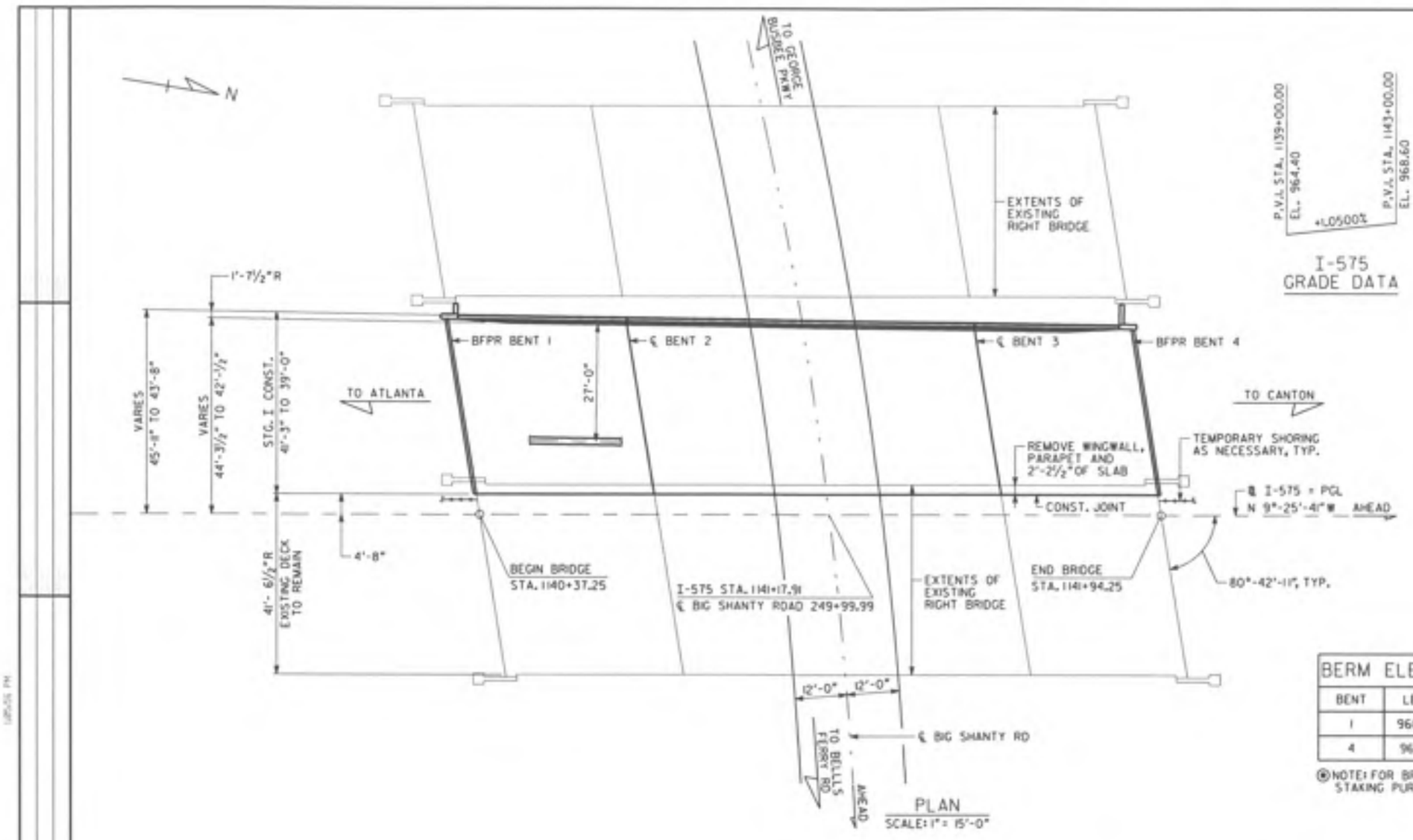

PLAN
SCALE: 1" = 15'-0"

P.V.I. STA. 1139+00.00
EL. 964.40
+1.0500%
P.V.I. STA. 1143+00.00
EL. 968.60

I-575 GRADE DATA

P.I. STA. = 251+94.83
Δ = 3°-23'-47"
D = 5°-43'-46"
T = 28.05 FT
L = 547.97 FT
R = 1000.00 FT

BIG SHANTY RD HORIZONTAL CURVE DATA

STA. 248+50.00	STA. 249+00.00	STA. 249+50.00	STA. 250+00.00	STA. 250+50.00	STA. 251+00.00
EL. 944.23	EL. 944.39	EL. 944.55	EL. 944.70	EL. 944.81	EL. 944.84

BIG SHANTY RD GRADE DATA

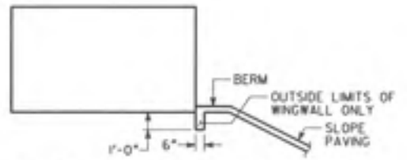

SLOPE PAVING DETAIL AT WINGS

BERM ELEVATIONS ⊛		
BENT	LEFT	RIGHT
1	960.26	959.97
4	961.86	961.58

⊛NOTE: FOR BRIDGE ENDROLL STAKING PURPOSES ONLY.

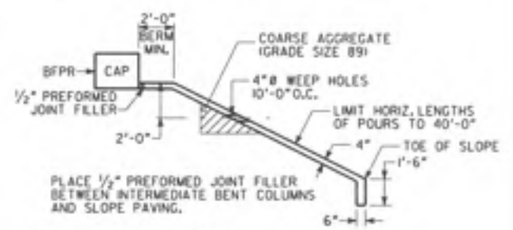

SLOPE PAVING DETAIL

DESIGN DATA

SPECIFICATIONS ---------- AASHTO 17TH EDITION, 2002
(DESIGNED FOR SEISMIC PERFORMANCE CATEGORY A)
TYPICAL HS20-44 AND/OR MILITARY LOADING --- IMPACT ALLOWED
FUTURE PAVING ALLOWANCE ---------- 30 LBS PER SQ FT

WIDENED BRIDGE CONSISTS OF

1 - 41'-0" W BEAM COMPOSITE SIMPLE SPAN ------ SPECIAL DESIGN
2 - 80'-0" W BEAM COMPOSITE SIMPLE SPAN ------ SPECIAL DESIGN
1 - 36'-0" W BEAM COMPOSITE SIMPLE SPAN ------ SPECIAL DESIGN
4 - PILE END BENTS ---------- SPECIAL DESIGN
3 - CONCRETE INTERMEDIATE BENTS ---------- SPECIAL DESIGN

UTILITIES

NONE

EXISTING RIGHT BRIDGE SERIAL NO. 067-0115-0
EXISTING RIGHT BRIDGE I.D. NO. 067-0041D-002.28N
PROJECT P.I. NO. 713640

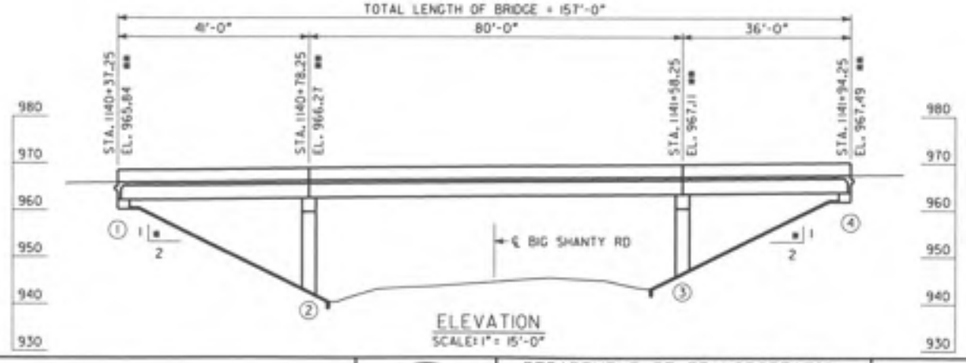

ELEVATION
SCALE: 1" = 15'-0"

NOTES:

1. ⊛ SLOPE NORMAL TO END BENTS.
2. ⊛⊛ STATIONS ARE ALONG ℄ I-575 AT THE INTERSECTION OF ℄ I-575 AND BFPR OR ℄ BENT. ELEVATIONS ARE ALONG PGL.
3. END BENT PILES NOT SHOWN.
4. THE PROPOSED BRIDGE DECK IS TO BE BUILT ON A CONSTANT CROSS SLOPE OF 1.04%, SLOPING DOWN TO THE RIGHT.

BRIDGE NO. 37

AREAS ENGLISH-METRIC	11/20/09
DRAWN BY	DATE
CHECKED BY	DATE
SUPERVISOR	DATE
APPROVED	DATE

REVISIONS

NO	DATE	DESCRIPTION	ORIG	CHKR	SUPV	APPR
A	6/30/09	Progress Drawings (50 % Revision 2)	AEM	JCR	GLE	SJL
B	9/25/09	90% SUBMISSION	AEM	JCR	GLE	SJL
C	11/30/09	PLOTTED PER GDOT'S TERMINATION FOR CONVENIENCE DIRECTION	AEM			

GTP Georgia Transportation Partners

NORTHWEST I-75/I-575 CORRIDOR

DEPARTMENT OF TRANSPORTATION
STATE OF GEORGIA

JBT J.B. Trimble, Inc.
2550 Heritage Ct, SE Suite 250
Atlanta GA 30339-3062
(770) 952-1022

BRIDGE SHEET 1 OF 9

I-75 / I-575 NORTHWEST CORRIDOR

I-575 REVERSIBLE OVER BIG SHANTY RD

PLAN AND ELEVATION

COBB COUNTY NH000-0575-01(028)

DRAWING NO. 35-13

12/1/2009

STATE	PROJECT NUMBER	SHEET NO.	TOTAL SHEETS
GA	NH000-0575-01(028)		

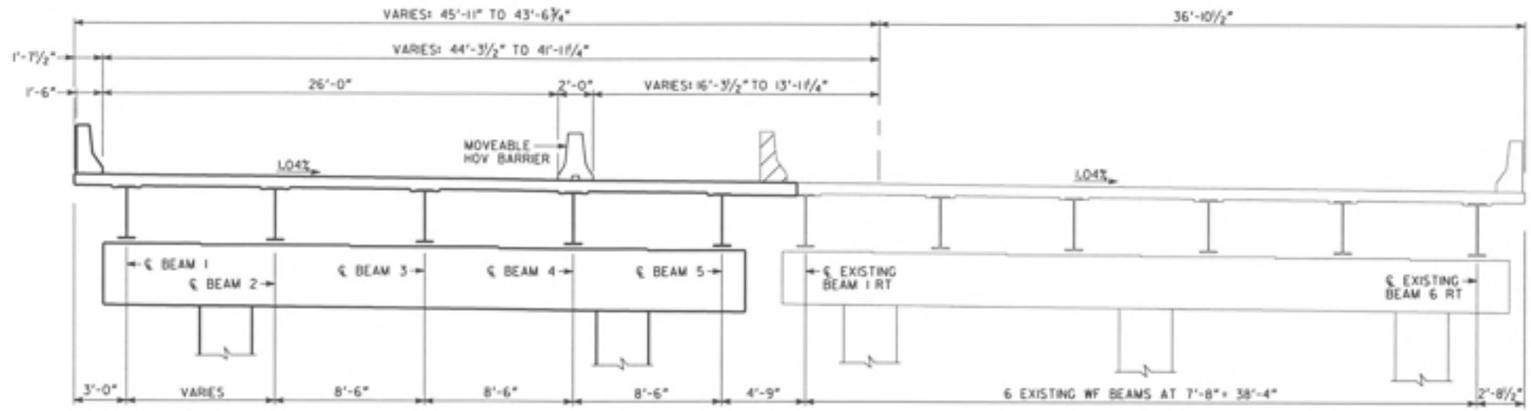

DECK SECTION
(LOOKING AHEAD, RIGHT BRIDGE)

CONSTRUCTION SEQUENCE

STAGE I:

1. PLACE TEMPORARY BARRIER, MAINTAIN TWO 12'-0" LANES OF TRAFFIC IN EACH DIRECTION ON EXISTING BRIDGES.
2. REMOVE PORTIONS OF EXISTING NORTH BOUND BRIDGE AS NECESSARY FOR STAGE I CONSTRUCTION.
3. CONSTRUCT STAGE I SUBSTRUCTURE.
4. CONSTRUCT STAGE I SUPERSTRUCTURE.

NOTE 8 IMPORTANT NOTICE: THIS DRAWING IS AN INCOMPLETE WORK-IN-PROGRESS AND ITS USE IS SUBJECT TO NOTE 1 ON DRAWING NO. 1-01.

BRIDGE NO. 37

ABBAS ESHAGHI-HEYDARI	11/20/09	
DRAWN BY	DATE	
CHECKED BY	DATE	
SUPERVISOR	DATE	
APPROVED	DATE	

REVISIONS

NO	DATE	DESCRIPTION	ORIG	CHKR	SUPR	APPR
A	6/30/09	Progress Drawings (50 % Revision 2)	AEM	JCR	GLE	SJL
B	9/25/09	SDI SUBMISSION	AEM	JCR	GLE	SJL
C	11/30/09	PLOTTED PER GDOT'S TERMINATION FOR CONVENIENCE DIRECTION	AEM			

GTP Georgia Transportation Partners

NORTHWEST I-75/I-575 CORRIDOR

DEPARTMENT OF TRANSPORTATION
STATE OF GEORGIA

JBT J.B. Trimble, Inc.
2550 Heritage Ct, SE Suite 250
Atlanta GA 30339-3062
(770) 952-1022

BRIDGE SHEET 2 OF 9

I-75 / I-575 NORTHWEST CORRIDOR

I-575 REVERSIBLE OVER BIG SHANTY RD

CONSTRUCTION SEQUENCE

COBB COUNTY NH000-0575-01(028)

DRAWING NO. 35-14

STATE	PROJECT NUMBER	SHEET NO.	TOTAL SHEETS
GA	NH000-0575-01(028)		

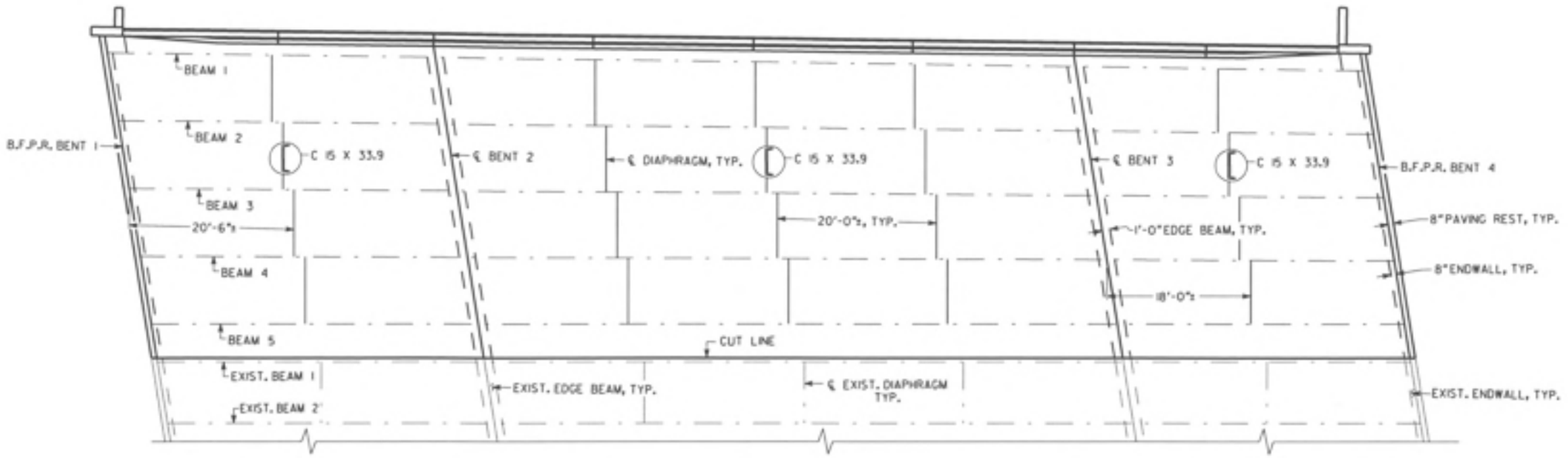

PLAN
SCALE: 1/8" = 1'-0"

NOTE ※ IMPORTANT NOTICE: THIS DRAWING IS AN INCOMPLETE WORK-IN-PROGRESS AND ITS USE IS SUBJECT TO NOTE 1 ON DRAWING NO. 1-01.

BRIDGE NO. 37

ABBAS ESHAGHI-MEYBODI 11/20/09
DRAWN BY DATE
CHECKED BY DATE
SUPERVISOR DATE
APPROVED DATE

REVISIONS

NO	DATE	DESCRIPTION	ORIG	CHKR	SUPV	APPR
A	6/30/09	Progress Drawings ISO !!! Revision 2!	AEM	JCR	GLE	SJL
B	9/25/09	SGL SUBMISSION	AEM	JCR	GLE	SJL
C	11/30/09	PLOTTED PER GDOT'S TERMINATION FOR CONVENIENCE DIRECTION	AEM			

GTP Georgia Transportation Partners

NORTHWEST I-75/I-575 CORRIDOR

DEPARTMENT OF TRANSPORTATION
STATE OF GEORGIA

JBT J.B. Trimble, Inc.
2550 Heritage Ct, SE Suite 250
Atlanta GA 30339-3062
(770) 952-1022

BRIDGE SHEET 3 OF 9

I-75 / I-575 NORTHWEST CORRIDOR

I-575 REVERSIBLE OVER BIG SHANTY RD

DECK PLAN

COBB COUNTY NH000-0575-01(028) DRAWING NO. 35-15

STATE	PROJECT NUMBER	SHEET NO.	TOTAL SHEETS
GA	NH000-0575-01(028)		

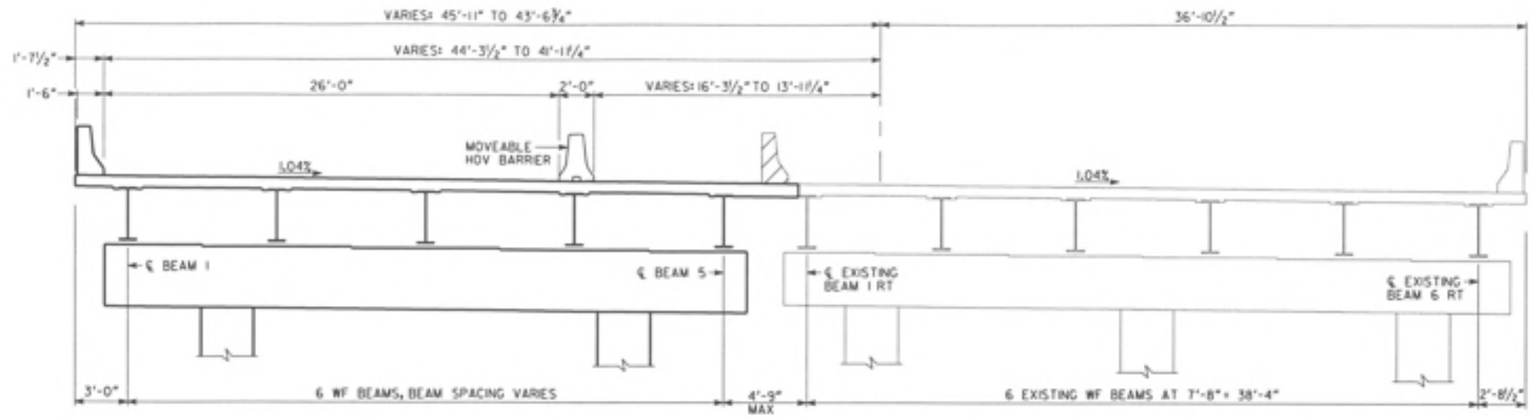

DECK SECTION
(LOOKING AHEAD, RIGHT BRIDGE)

SPAN	AVERAGE DECK WIDTH	SLAB THICKNESS	MAXIMUM BEAMS SPACING
1	41'-3"	8½"	8'-6"
2	40'-3"	8½"	8'-4"
3	39'-0"	8½"	8'-1"

NOTES:

1. MAINTAIN 2" CLEARANCE ON ALL REINFORCEMENT UNLESS OTHERWISE NOTED.
2. CARE SHALL BE EXERCISED IN REMOVAL OF EXISTING CONCRETE AND RETAIN EXISTING REINFORCEMENT. EXISTING REINFORCEMENT BARS TO BE SPLICED A MINIMUM OF 2'-6". ANY EXISTING REINFORCEMENT STEEL DAMAGED DURING REMOVAL SHALL BE REPLACED BY THE CONTRACTOR AT NO ADDITIONAL COST.
3. NON-CONTACT LAPS MAY BE USED BETWEEN EXISTING AND NEW TRANSVERSE DECK BARS.

NOTE ‼ IMPORTANT NOTICE: THIS DRAWING IS AN INCOMPLETE WORK-IN-PROGRESS AND ITS USE IS SUBJECT TO NOTE 1 ON DRAWING NO. 1-01.

BRIDGE NO. 37

ABBAS ESNAGHI-MEYBODI	11/20/09	
DRAWN BY	DATE	
CHECKED BY	DATE	
SUPERVISOR	DATE	
APPROVED	DATE	

REVISIONS

NO	DATE	DESCRIPTION	DRIG	CHKR	SUPV	APPR
A	6/30/09	Progress Drawings (50 % Revision 2)	ABM	JCR	GLE	SJL
B	9/25/09	SDI SUBMISSION	ABM	JCR	GLE	SJL
C	11/30/09	PLOTTED PER GDOT'S TERMINATION FOR CONVENIENCE DIRECTION	ABM			

GTP Georgia Transportation Partners

NORTHWEST I-75/I-575 CORRIDOR

DEPARTMENT OF TRANSPORTATION
STATE OF GEORGIA

JBT J.B. Trimble, Inc.
2550 Heritage Ct, SE Suite 250
Atlanta GA 30339-3062
(770) 952-1022

BRIDGE SHEET 4 OF 9

I-75 / I-575 NORTHWEST CORRIDOR

I-575 REVERSIBLE OVER BIG SHANTY RD

CONSTRUCTION SEQUENCE

COBB COUNTY NH000-0575-01(028)

DRAWING NO. 35-16

12/1/2009

n:\tra\255\1\drawings\src\c\BRI\Preliminary\Bridge\Plans_05.dgn

STATE	PROJECT NUMBER	SHEET NO.	TOTAL SHEETS
GA	NH000-0575-01(028)		

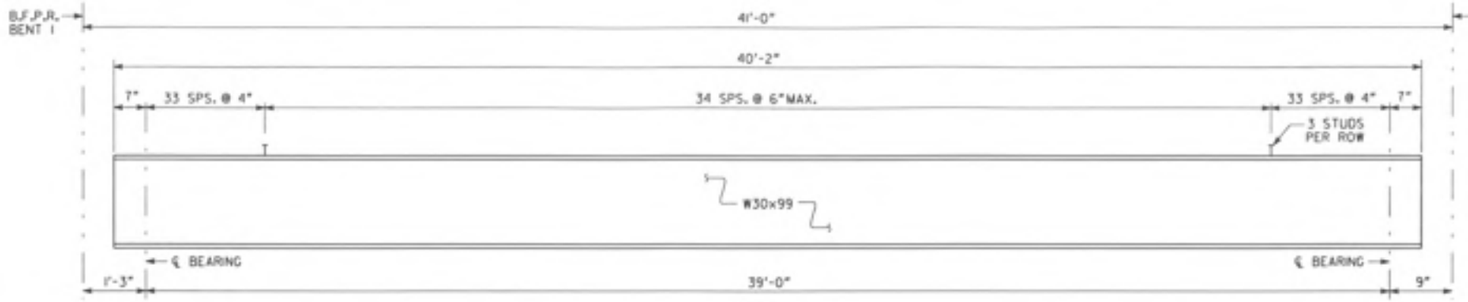

SPAN 1

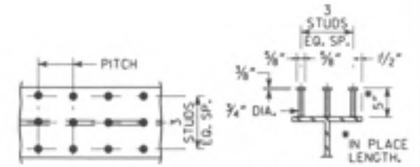

PLAN OF BEAM SECTION OF BEAM

FULLY BUTT WELD STUD SHEAR CONNECTORS TO TOP FLANGE OF BEAM.

STUD SHEAR CONNECTOR DETAIL

SPANS 1 & 3

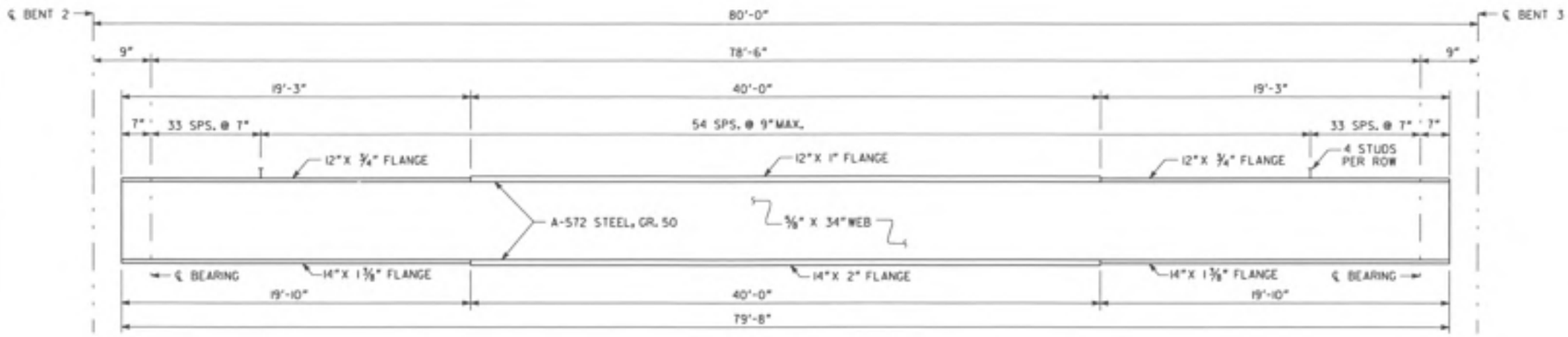

SPAN 2

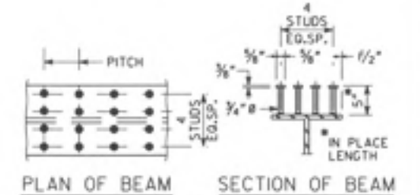

PLAN OF BEAM SECTION OF BEAM

STUD SHEAR CONNECTOR SHALL BE FULLY BUTT WELDED TO TOP FLANGE OF BEAM.

STUD SHEAR CONNECTOR DETAIL

SPAN 2

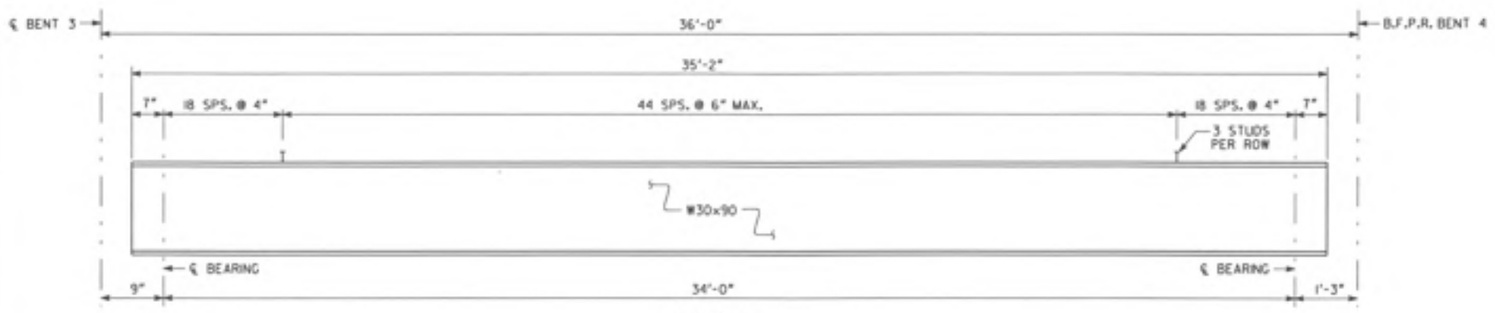

SPAN 3

NOTE !! IMPORTANT NOTICE!! THIS DRAWING IS AN INCOMPLETE WORK-IN-PROGRESS AND ITS USE IS SUBJECT TO NOTE 1 ON DRAWING NO. 1-01.

BRIDGE NO. 37

ABBAS ESHAGHIAN-HEYBOOD	11/20/09	
DRAWN BY	DATE	
CHECKED BY	DATE	
SUPERVISOR	DATE	
APPROVED	DATE	

REVISIONS						
NO	DATE	DESCRIPTION	ORIG	CHKR	SUPV	APPR
A	6/30/09	Progress Drawings (SD 11 Revision 2)	AEW	JCR	GLE	SJL
B	9/25/09	SDS SUBMISSION	AEW	JCR	GLE	SJL
C	11/30/09	PLOTTED PER GDOT'S TERMINATION FOR CONVENIENCE DIRECTION	AEW			

GTP Georgia Transportation Partners

NORTHWEST I-75/I-575 CORRIDOR

DEPARTMENT OF TRANSPORTATION
STATE OF GEORGIA

JBT J.B. Trimble, Inc.
2550 Heritage Ct, SE Suite 250
Atlanta GA 30339-3062
(770) 952-1022

BRIDGE SHEET 5 OF 9

I-75 / I-575 NORTHWEST CORRIDOR

I-575 REVERSIBLE OVER BIG SHANTY RD

BEAM INFORMATION

COBB COUNTY NH000-0575-01(028)

DRAWING NO. 35-17

STATE	PROJECT NUMBER	SHEET NO.	TOTAL SHEETS
GA	NH000-0575-0110281		

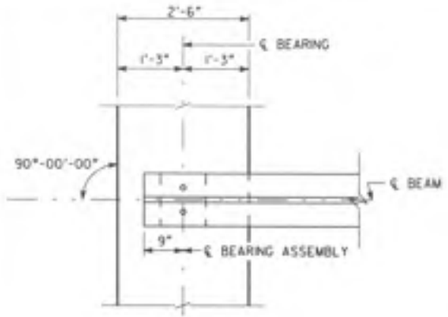

PLAN
BENTS 1 & 4

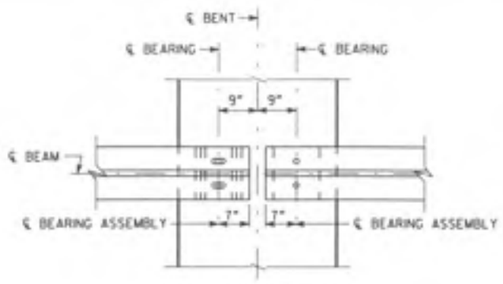

PLAN
BENTS 2

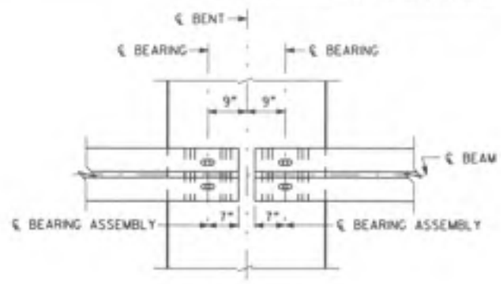

PLAN
BENTS 3

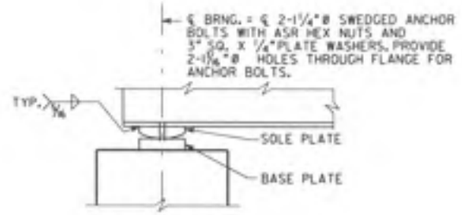

ELEVATION
BENTS 1 & 4

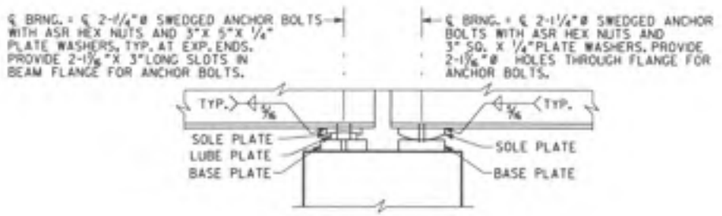

ELEVATION
BENT 2

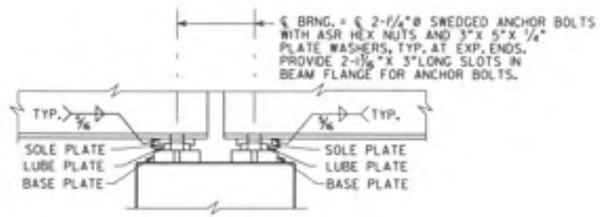

ELEVATION
BENT 3

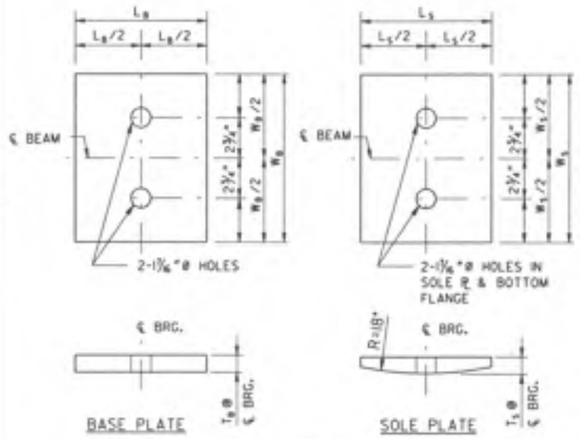

TYPICAL FIXED BEARING ASSEMBLY
BENTS 1,2 AH & 4

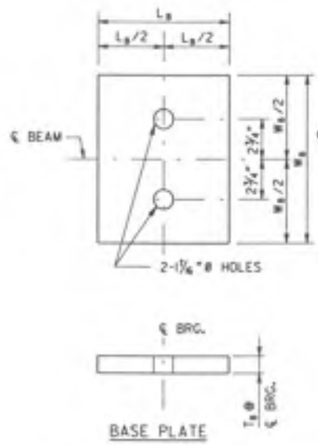

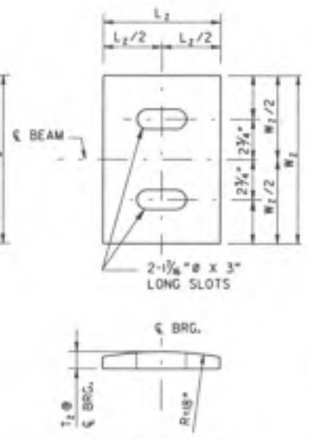

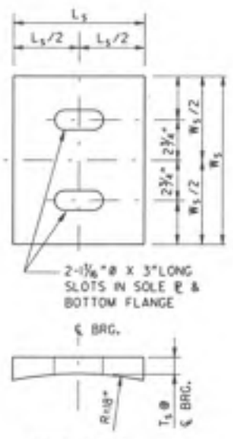

TYPICAL EXPANSION BEARING ASSEMBLY
BENTS 2 BK & 3

NOTES:

1. ALL BEARING ASSEMBLY COMPONENTS SHALL BE ASTM A709 GRADE 36 STEEL.
2. SELF-LUBRICATING PLATES SHALL BE CAST BRONZE.
3. ANCHOR BOLTS, ASR HEX NUTS AND PLATE WASHERS SHALL BE ASTM A276 TYPE 304 STAINLESS STEEL. PROVIDE 2½"MIN. PROJECTION OF ANCHOR BOLT ABOVE TOP OF BEAM FLANGE. SET ANCHOR BOLTS 12"INTO CAP.

BEARING ASSEMBLY DIMENSIONS (IN.)

BENT LOCATION	BEARING TYPE	BASE PLATE			SOLE PLATE			BRONZE PLATE			TOTAL BEARING DEPTH
		W_B	L_B	T_B	W_S	L_S	T_S	W_Z	L_Z	T_Z	
BENT 1	FIXED	10.50	9.00	2.00	10.5	9.00	2.00	-	-	-	4.00
BENT 2 BK	EXPANSION	10.50	9.00	1.00	10.5	9.00	1.50	10.5	7.0	1.0	3.50
BENT 2 AH	FIXED	14.00	9.75	2.00	14.0	9.75	2.25	-	-	-	4.25
BENT 3 BK	EXPANSION	14.00	9.75	1.00	14.0	8.00	1.75	12.0	6.0	1.0	3.75
BENT 3 AH	EXPANSION	10.375	9.00	1.00	10.375	9.00	1.50	10.0	7.0	1.0	3.50
BENT 4	FIXED	10.375	8.50	1.75	10.375	8.50	2.00	-	-	-	3.75

NOTE 1: IMPORTANT NOTICE: THIS DRAWING IS AN INCOMPLETE WORK-IN-PROGRESS AND ITS USE IS SUBJECT TO NOTE 1 ON DRAWING NO. 1-01.

BRIDGE NO. 37

JOBNO. FHWGEO-NEW001	11/20/09	
DRAWN BY	DATE	
CHECKED BY	DATE	
SUPERVISOR	DATE	
APPROVED	DATE	

REVISIONS

NO	DATE	DESCRIPTION	DRIG.	CHKR.	SUPV.	APPR.
A	6/30/09	Progress Drawings ISD 11 Revision 21	AEM	JCR	GLE	S.A.
B	9/25/09	SDC SUBMISSION	AEM	JCR	GLE	S.A.
C	11/30/09	PLOTTED PER GDOT'S TERMINATION FOR CONVENIENCE DIRECTION	AEM			

GTP Georgia Transportation Partners

NORTHWEST I-75/I-575 CORRIDOR

DEPARTMENT OF TRANSPORTATION
STATE OF GEORGIA

JBT J.B. Trimble, Inc.
2550 Heritage Ct, SE Suite 250
Atlanta GA 30339-3062
(770) 952-1022

BRIDGE SHEET 6 OF 9

I-75 / I-575 NORTHWEST CORRIDOR

I-575 REVERSIBLE OVER BIG SHANTY RD

BEARING INFORMATION

COBB COUNTY NH000-0575-01(028)

DRAWING NO. 35-18

STATE	PROJECT NUMBER	SHEET NO.	TOTAL SHEETS
GA	NHOOO-0575-01(028)		

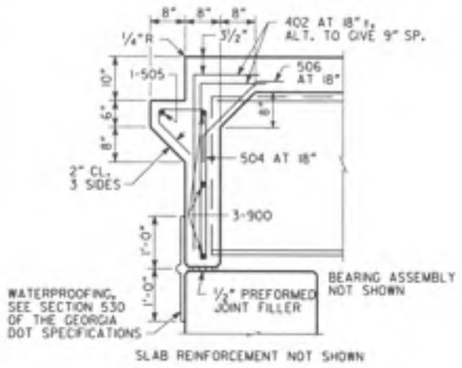

SECTION AT ENDWALL

(BENTS 1 & 4)

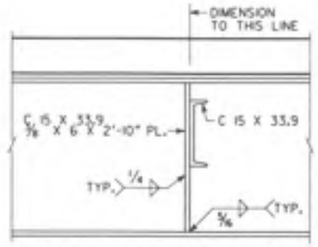

SECTION THRU DIAPHRAGM

(ALL SPANS)

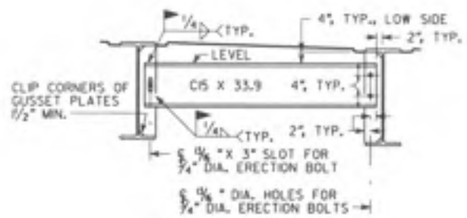

DIAPHRAGM DETAILS

NOTE: WELD DIAPHRAGMS BEFORE DECK IS POURED.

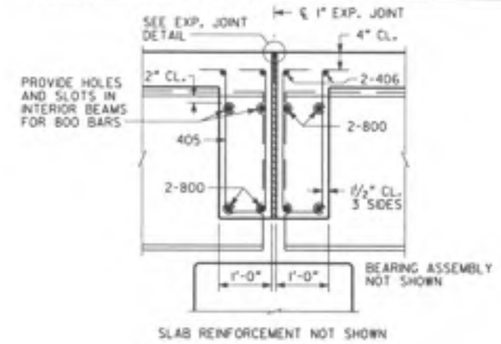

SECTION THRU EDGE BEAM

(BENTS 2 & 3)

JOINT OPENING		
TEMPERATURE (°F)	BENT 2 W (IN.)	BENT 3 W (IN.)
30	0.839	1.001
60	0.750	0.750
90	0.661	0.499

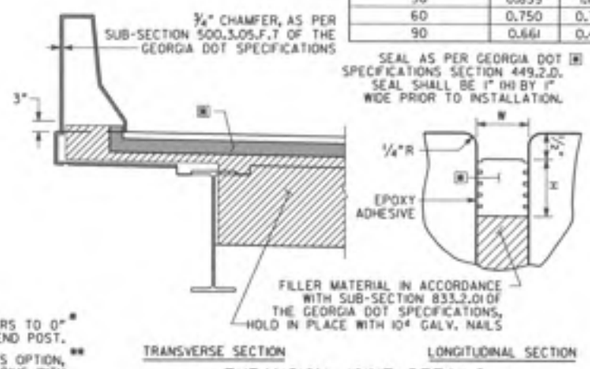

SEAL AS PER GEORGIA DOT SPECIFICATIONS SECTION 449.2.D. SEAL SHALL BE 1" (H) BY 1" WIDE PRIOR TO INSTALLATION.

EXPANSION JOINT DETAILS

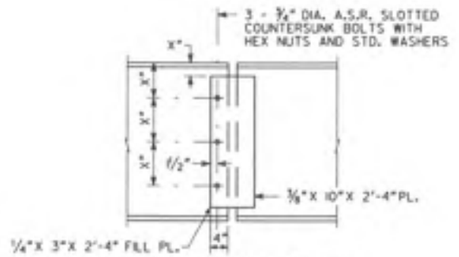

CONCEALMENT PLATE DETAIL

EDGE BEAM BAR LAP DETAIL

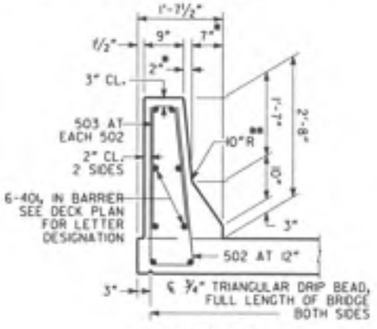

BARRIER DETAIL

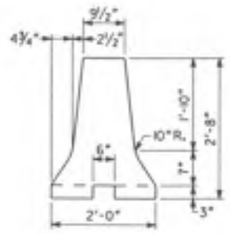

HOV BARRIER DETAIL

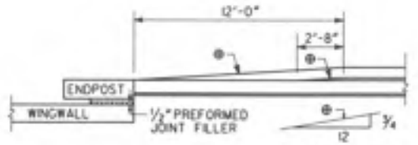

BARRIER TRANSITION DETAIL

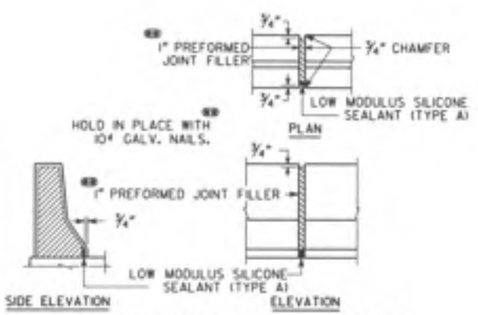

DETAILS OF 1" EXPANSION JOINT IN BARRIER

NOTE II IMPORTANT NOTICE: THIS DRAWING IS AN INCOMPLETE WORK-IN-PROGRESS AND ITS USE IS SUBJECT TO NOTE 1 ON DRAWING NO. 1-01.

BRIDGE NO. 37

REVISIONS						
NO	DATE	DESCRIPTION	ORIG	CHKR	SUPV	APPR
A	6/30/09	Progress Drawings (SD 11 Revision 2)	AEM	JDR	DLE	S.B.
B	9/25/09	SCI SUBMISSION	AEM	JDR	DLE	S.B.
C	11/30/09	PLOTTED PER COOT'S TERMINATION FOR CONVENIENCE DIRECTION	AEM			

ABBAS ESHAGHPOUR-HEYDARI 12/21/09 — Drawn By — Date
CHECKED BY — Date
SUPERVISOR — Date
APPROVED — Date

GTP Georgia Transportation Partners

NORTHWEST I-75/I-575 CORRIDOR

DEPARTMENT OF TRANSPORTATION
STATE OF GEORGIA

JBT J.B. Trimble, Inc.
2550 Heritage Ct, SE Suite 250
Atlanta GA 30339-3062
(770) 952-1022

BRIDGE SHEET 7 OF 9

I-75 / I-575 NORTHWEST CORRIDOR

I-575 REVERSIBLE OVER BIG SHANTY RD

MISCELLANEOUS DETAILS

COBB COUNTY NHOOO-0575-01(028)

DRAWING NO. 35-19

12/21/2009 3:06:58 PM
n:\trek2000\projects\sc\SB37\Preliminary\Bigshanty_MD.dgn

STATE	PROJECT NUMBER	SHEET NO.	TOTAL SHEETS
GA	NH000-0575-01(028)		

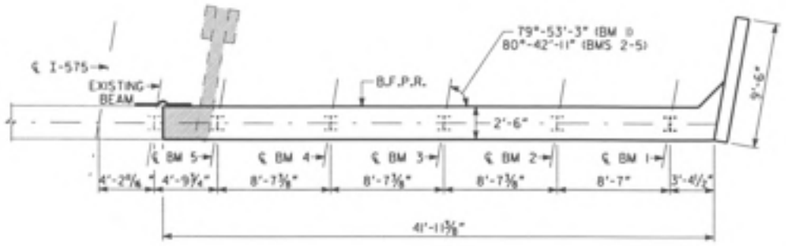

PLAN

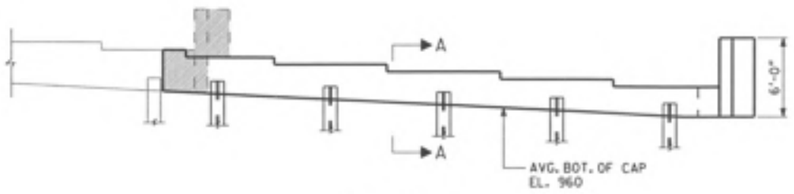

ELEVATION
(BENT 1 LOOKING BACK)

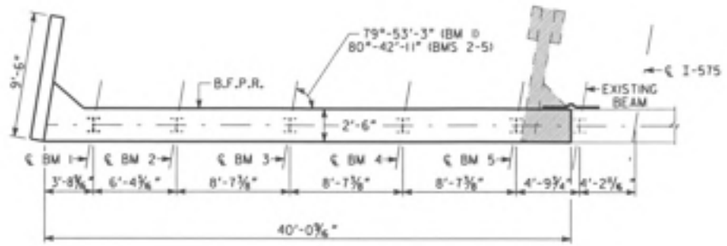

PLAN

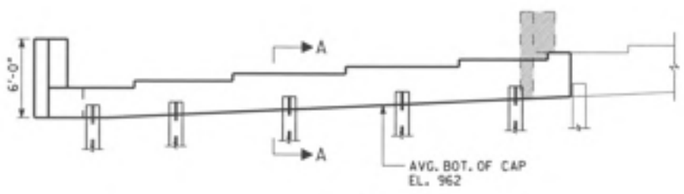

ELEVATION
(BENT 4 LOOKING AHEAD)

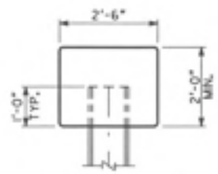

SECTION A-A

NOTE:

1. MAINTAIN 2" CL. ON ALL REINFORCEMENT UNLESS OTHERWISE NOTED.

PLAN DRIVING OBJECTIVE

ALL PILES SHALL BE DRIVEN TO A DRIVING RESISTANCE OF 58 TONS AFTER AN ESTIMATED TIP ELEVATION SHOWN BELOW IS ACHIEVED

BENT	EST. TIP
1	XXX
4	XXX

ALL PILES SHALL BE STEEL H, HP 12 X 53

NOTE ※ IMPORTANT NOTICE: THIS DRAWING IS AN INCOMPLETE WORK-IN-PROGRESS AND ITS USE IS SUBJECT TO NOTE 1 ON DRAWING NO. 1-01.

BRIDGE NO. 37

ABBAS ESHAGIEH-HEYBOOD	11/20/09
DRAWN BY	DATE
CHECKED BY	DATE
SUPERVISOR	DATE
APPROVED	DATE

REVISIONS

NO	DATE	DESCRIPTION	DRG	CHKR	SUPV	APPR
A	6/30/09	Progress Drawings (50 % Revision 2)	AEM	JCR	GLE	SJL
B	9/25/09	50% SUBMISSION	AEM	JCR	GLE	SJL
C	11/30/09	PLOTTED PER GDOT'S TERMINATION FOR CONVENIENCE DIRECTION	AEM			

GTP Georgia Transportation Partners

NORTHWEST I-75/I-575 CORRIDOR

DEPARTMENT OF TRANSPORTATION
STATE OF GEORGIA

JBT J.B. Trimble, Inc.
2550 Heritage Ct, SE Suite 250
Atlanta GA 30339-3062
(770) 952-1022

BRIDGE SHEET
8 OF 9

I-75 / I-575 NORTHWEST CORRIDOR

I-575 REVERSIBLE OVER BIG SHANTY RD
END BENTS

COBB COUNTY NH000-0575-01(028)

DRAWING NO. 35-20

STATE	PROJECT NUMBER	SHEET NO.	TOTAL SHEETS
GA	NH000-0575-01(028)		

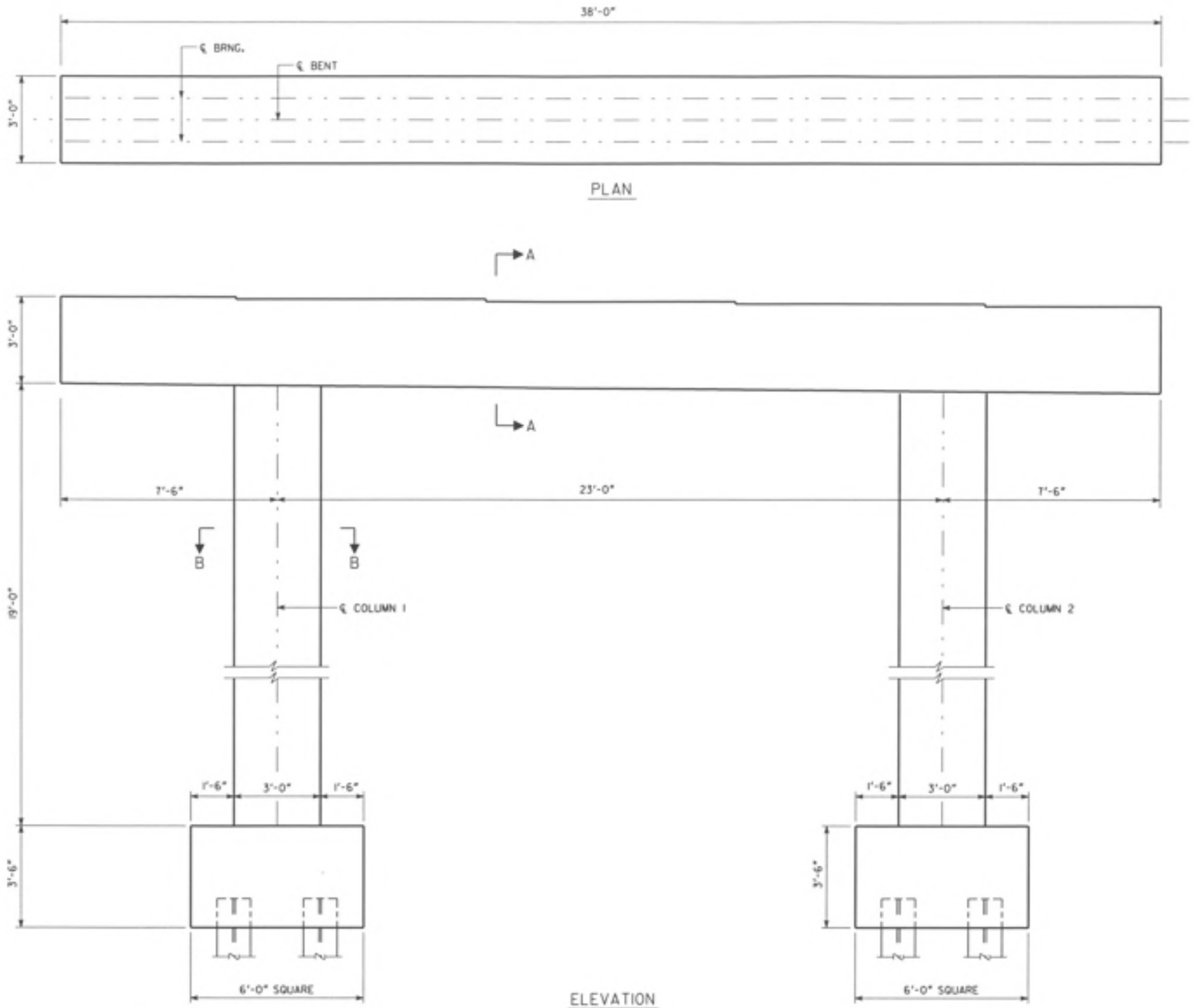

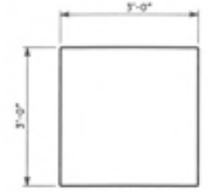

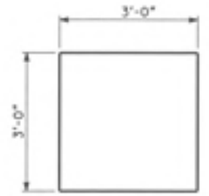

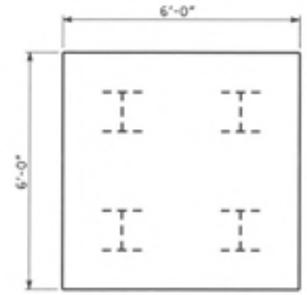

PLAN DRIVING OBJECTIVE

ALL PILES SHALL BE DRIVEN TO A DRIVING RESISTANCE OF 96 TONS AFTER A MINIMUM TIP ELEVATION OF XXX IS ACHIEVED.

ALL PILES SHALL BE STEEL H, HP 14 X 73

NOTE ※ IMPORTANT NOTICE: THIS DRAWING IS AN INCOMPLETE WORK-IN-PROGRESS AND ITS USE IS SUBJECT TO NOTE 1 ON DRAWING NO. 1-01.

BRIDGE NO. 37

ABBAS ESHAGIEH-MEYBODI	11/20/09
DRAWN BY	DATE
CHECKED BY	DATE
SUPERVISOR	DATE
APPROVED	DATE

REVISIONS

NO	DATE	DESCRIPTION	ORIG	CHKR	SUPV	APPR
A	6/30/09	Progress Drawings (50 ※ Revision 2)	AEM	JCR	GLE	SJL
B	9/25/09	50% SUBMISSION	AEM	JCR	GLE	SJL
C	11/30/09	PLOTTED PER GDOT'S TERMINATION FOR CONVENIENCE DIRECTION	AEM			

GTP Georgia Transportation Partners

NORTHWEST I-75/I-575 CORRIDOR

DEPARTMENT OF TRANSPORTATION
STATE OF GEORGIA

JBT J.B. Trimble, Inc.
2550 Heritage Ct, SE Suite 250
Atlanta GA 30339-3062
(770) 952-1022

BRIDGE SHEET
9 OF 9

I-75 / I-575 NORTHWEST CORRIDOR

I-575 REVERSIBLE OVER BIG SHANTY RD
BENT INFORMATION

COBB COUNTY NH000-0575-01(028)

DRAWING NO. 35-21

STATE	PROJECT NUMBER	SHEET NO.	TOTAL SHEETS
GA	NH000-0575-01(028)		

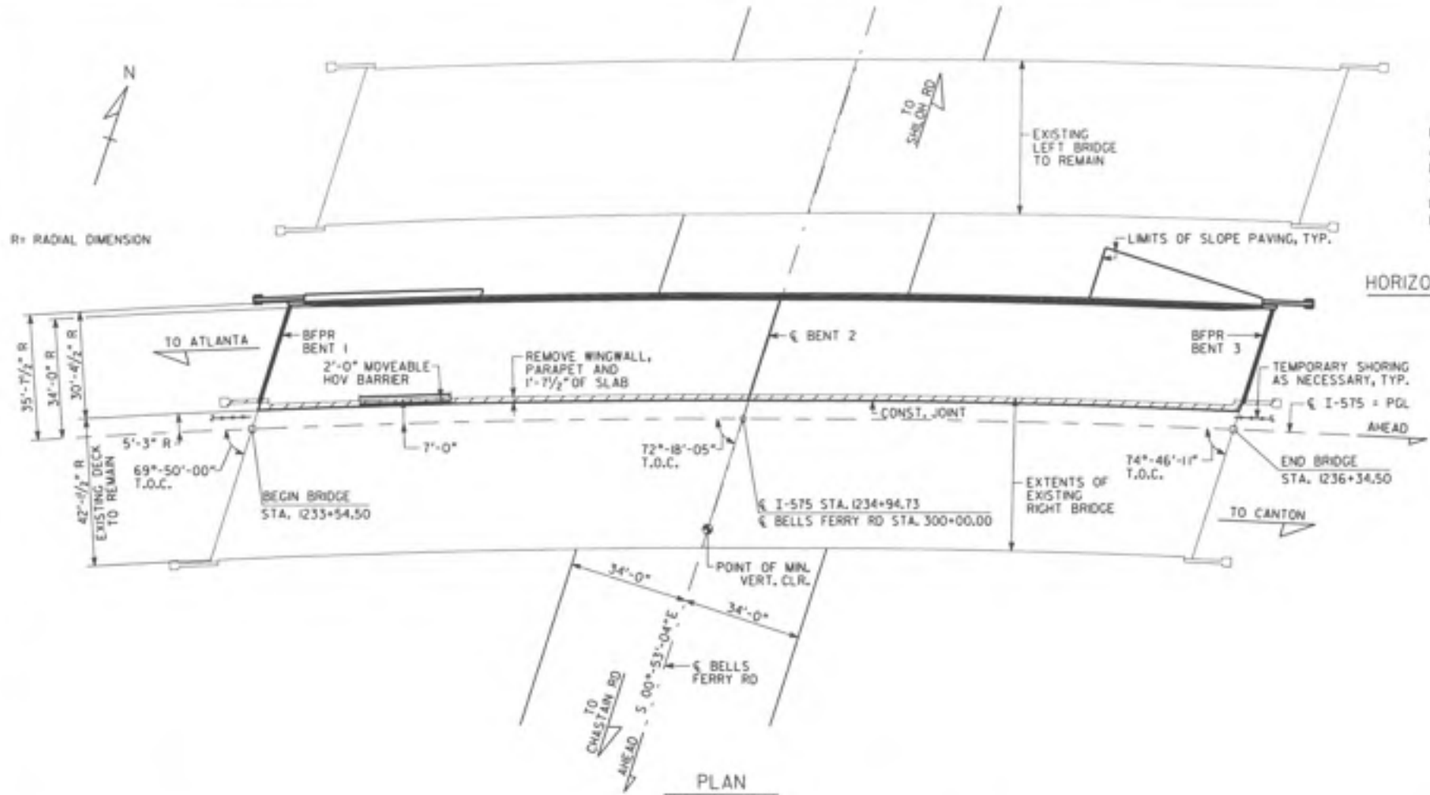

PLAN
SCALE: 1" = 20'-0"

P.I. STA. = 1218+37.73
Δ = 83°-59'-59"
D = 1°-45'-47"
T = 2926.30 FT
L = 4764.73 FT
R = 3250.00 FT

℄ I-575 HORIZONTAL CURVE DATA

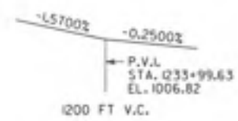

I-575 GRADE DATA

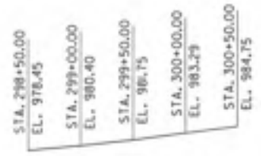

BELLS FERRY RD GRADE DATA

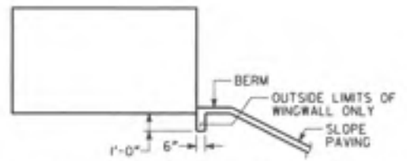

SLOPE PAVING DETAIL AT WINGS

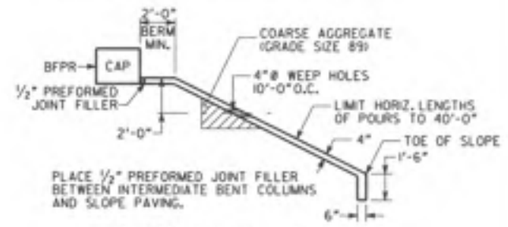

SLOPE PAVING DETAIL

BERM ELEVATIONS ⊛		
BENT	LEFT	RIGHT
1	***.**	***.**
3	***.**	***.**

⊛NOTE: FOR BRIDGE ENDROLL STAKING PURPOSES ONLY.

NOTES:

1. ■ SLOPE NORMAL TO END BENTS.
2. ** STATIONS ARE ALONG ℄ I-575 AT THE INTERSECTION OF ℄ I-575 AND BFPR OR ℄ BENT. ELEVATIONS ARE ALONG PGL.
3. END BENT PILES NOT SHOWN.
4. THE PROPOSED BRIDGE DECK IS TO BE BUILT ON A CONSTANT CROSS SLOPE OF 6%, SLOPING DOWN TO THE RIGHT.

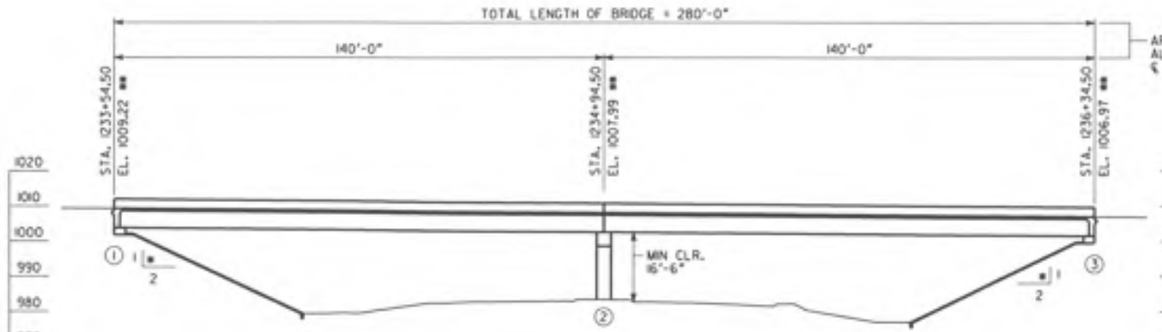

ELEVATION
SCALE: 1" = 20'-0"

DESIGN DATA

SPECIFICATIONS ---------- AASHTO (7TH EDITION, 2002 (DESIGNED FOR SEISMIC PERFORMANCE CATEGORY A)
TYPICAL HS20-44 AND/OR MILITARY LOADING --- IMPACT ALLOWED
FUTURE PAVING ALLOWANCE ---------- 30 LBS PER SQ FT

WIDENED BRIDGE CONSISTS OF

1 - 280'-0" CONTINUOUS POST TENSIONED BOX GIRDER UNIT (SPAN 1 = 140'-0"; SPAN 2 = 140'-0") ----- SPECIAL DESIGN
2 - PILE END BENTS ---------- SPECIAL DESIGN
1 - INTEGRAL CONCRETE INTERMEDIATE BENT ------ SPECIAL DESIGN

UTILITIES

TO BE DETERMINED

NONE

EXISTING RIGHT BRIDGE SERIAL NO. 067-0117-0
EXISTING RIGHT BRIDGE I.D. NO. 067-0041D-004.02N
PROJECT P.I. NO. 713640

BRIDGE NO. 38

ABBAS ESNAEIN-HEYDARI 11/20/09 DRAWN BY DATE
CHECKED BY DATE
SUPERVISOR DATE
APPROVED DATE

REVISIONS							
NO	DATE	DESCRIPTION	ORIG	CHKR	SUPV	APPR
A	6/30/09	Progress Drawings (50 % Revision 2)	AEM	JCR	GLE	SJL
B	9/25/09	90% SUBMISSION	AEM	JCR	GLE	SJL
C	11/30/09	PLOTTED PER GDOT'S TERMINATION FOR CONVENIENCE DIRECTION	AEM			

GTP Georgia Transportation Partners

NORTHWEST I-75/I-575 CORRIDOR

DEPARTMENT OF TRANSPORTATION
STATE OF GEORGIA

JBT J.B. Trimble, Inc.
2550 Heritage Ct, SE Suite 250
Atlanta GA 30339-3062
(770) 952-1022

BRIDGE SHEET 1 OF 2

I-75 / I-575 NORTHWEST CORRIDOR

I-575 REVERSIBLE OVER BELLS FERRY RD

PLAN AND ELEVATION

COBB COUNTY NH000-0575-01(028)

DRAWING NO. 35-22

STATE	PROJECT NUMBER	SHEET NO.	TOTAL SHEETS
GA	NH000-0575-01(028)		

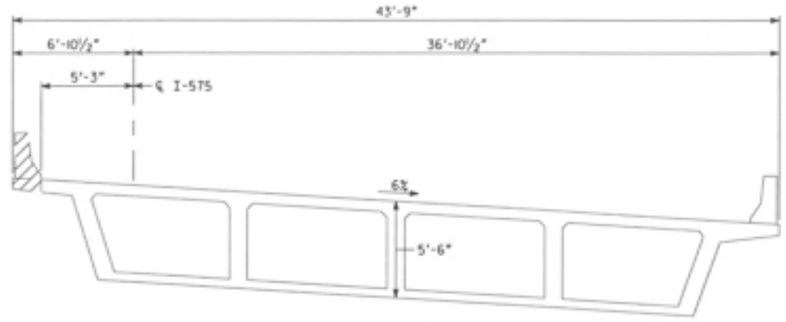

DECK SECTION
(LOOKING AHEAD, RIGHT BRIDGE)

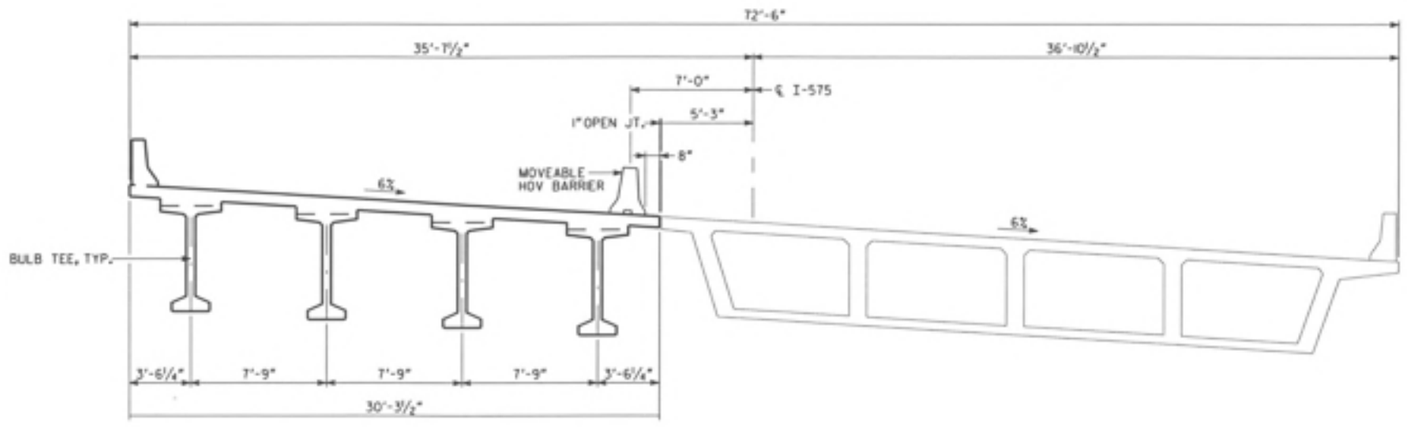

DECK SECTION
(LOOKING AHEAD, RIGHT BRIDGE)

NOTE ‖ IMPORTANT NOTICE: THIS DRAWING IS AN INCOMPLETE WORK-IN-PROGRESS AND ITS USE IS SUBJECT TO NOTE 1 ON DRAWING NO. 1-01.

BRIDGE NO. 38

ABBAS ESHAGIEH-MEYBODI	11/20/09
DRAWN BY	DATE
CHECKED BY	DATE
SUPERVISOR	DATE
APPROVED	DATE

REVISIONS

NO	DATE	DESCRIPTION	ORIG	CHKR	SUPV	APPR
A	6/30/09	Progress Drawings (50 ‖ Revision 2)	AEM	JCR	GLE	SJL
B	9/25/09	50% SUBMISSION	AEM	JCR	GLE	SJL
C	11/30/09	PLOTTED PER GDOT'S TERMINATION FOR CONVENIENCE DIRECTION	AEM			

GTP Georgia Transportation Partners

NORTHWEST I-75/I-575 CORRIDOR

DEPARTMENT OF TRANSPORTATION
STATE OF GEORGIA

JBT J.B. Trimble, Inc.
2550 Heritage Ct, SE Suite 250
Atlanta GA 30339-3062
(770) 952-1022

BRIDGE SHEET
2 OF 2

I-75 / I-575 NORTHWEST CORRIDOR

I-575 REVERSIBLE OVER BELLS FERRY RD
CONSTRUCTION SEQUENCE

COBB COUNTY NH000-0575-01(028)

DRAWING NO. 35-23

STATE	PROJECT NUMBER	SHEET NO.	TOTAL SHEETS
GA	NH000-0575-01(028)		

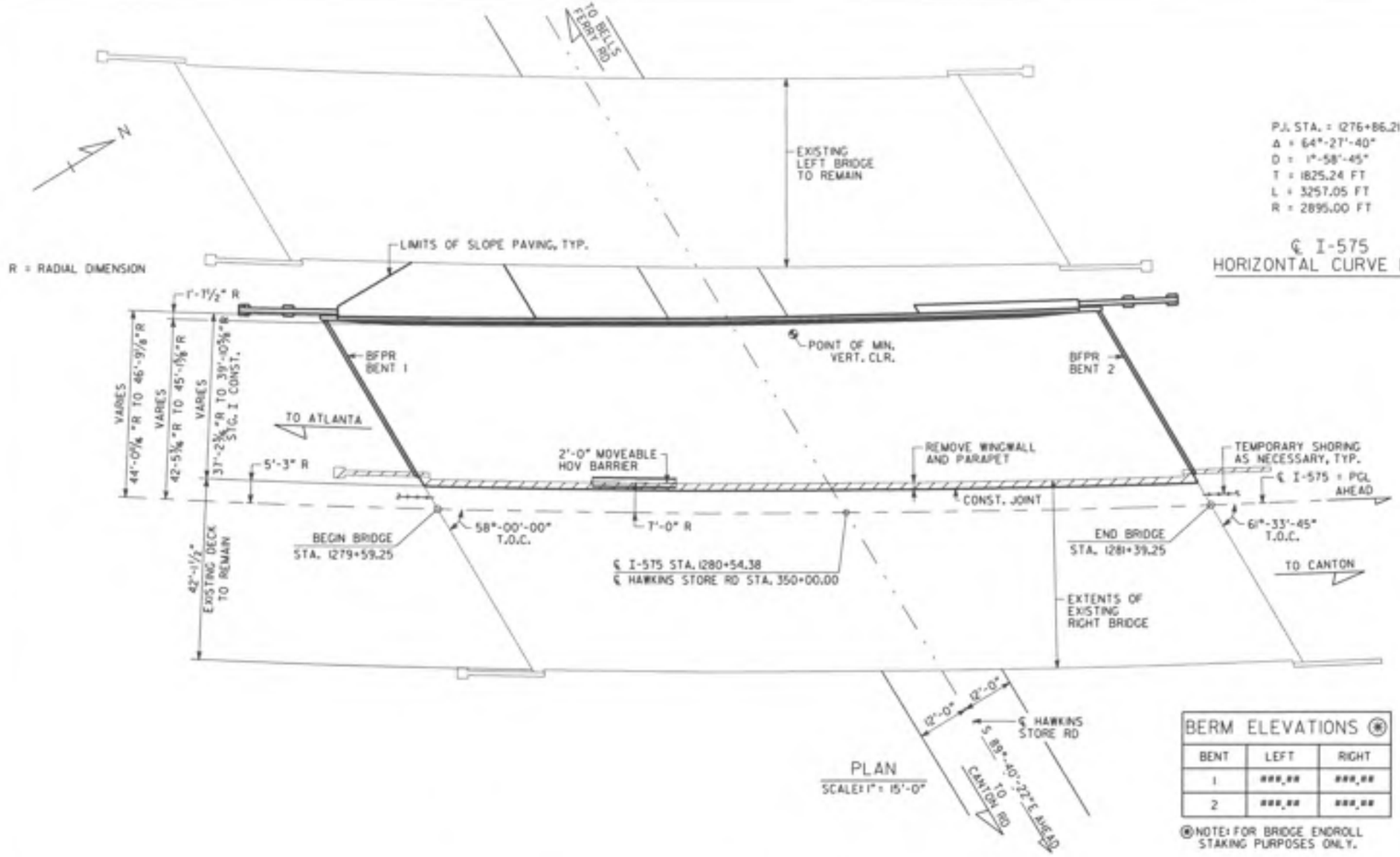

PLAN
SCALE: 1" = 15'-0"

P.I. STA. = 1276+86.21
Δ = 64°-27'-40"
D = 1°-58'-45"
T = 1825.24 FT
L = 3257.05 FT
R = 2895.00 FT

℄ I-575
HORIZONTAL CURVE DATA

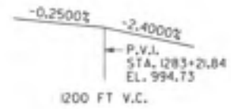

I-575
GRADE DATA

STA. 348+50.00	STA. 349+00.00	STA. 349+50.00	STA. 350+00.00	STA. 350+50.00	STA. 351+00.00
EL. 967.27	EL. 967.84	EL. 968.36	EL. 968.90	EL. 969.53	EL. 970.15

HAWKINS STORE RD
GRADE DATA

BERM ELEVATIONS ⊛		
BENT	LEFT	RIGHT
1	###.##	###.##
2	###.##	###.##

⊛NOTE: FOR BRIDGE ENDROLL STAKING PURPOSES ONLY.

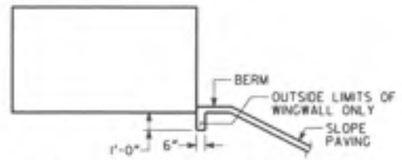

SLOPE PAVING DETAIL AT WINGS

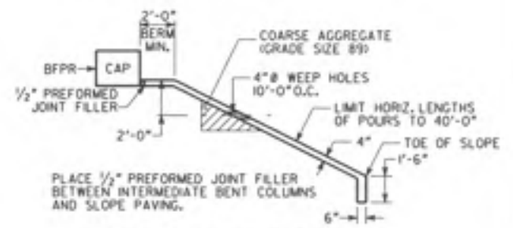

SLOPE PAVING DETAIL

DESIGN DATA

SPECIFICATIONS ---------- AASHTO 17TH EDITION, 2002
(DESIGNED FOR SEISMIC PERFORMANCE CATEGORY A)
TYPICAL HS20-44 AND/OR MILITARY LOADING --- IMPACT ALLOWED
FUTURE PAVING ALLOWANCE ---------- 30 LBS PER SQ FT

WIDENED BRIDGE CONSISTS OF

1 - 180'-0" POST TENSIONED BOX GIRDER UNIT --- SPECIAL DESIGN
2 - PILE END BENTS ---------- SPECIAL DESIGN

TO BE DETERMINED

UTILITIES

NONE

EXISTING RIGHT BRIDGE SERIAL NO. 067-0119-0
EXISTING RIGHT BRIDGE I.D. NO. 067-00417D-004.92N
PROJECT P.I. NO. 713640

NOTES:

1. ⊛ SLOPE NORMAL TO END BENTS.
2. ⊛⊛ STATIONS ARE ALONG ℄ I-575 AT THE INTERSECTION OF ℄ I-575 AND BFPR OR ℄ BENT. ELEVATIONS ARE ALONG PCL.
3. END BENT PILES NOT SHOWN.
4. THE PROPOSED BRIDGE DECK IS TO BE BUILT ON A CONSTANT CROSS SLOPE OF 1%, SLOPING DOWN TO THE LEFT.

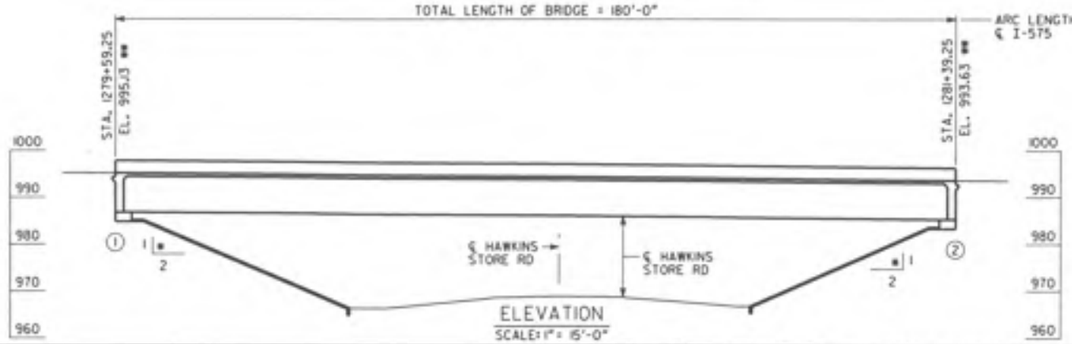

ELEVATION
SCALE: 1" = 15'-0"

BRIDGE NO. 39

ABBAS ESHAGHI-MEYBODI	11/20/09	
DRAWN BY	DATE	
CHECKED BY	DATE	
SUPERVISOR	DATE	
APPROVED	DATE	

REVISIONS						
NO	DATE	DESCRIPTION	DRG.	CHKR	SUPV	APPR
A	6/30/09	Progress Drawings (GD 11 Revision 21	AEM	JCR	GLE	SJL
B	9/25/09	SDE SUBMISSION	AEM	JCR	GLE	SJL
C	11/30/09	PLOTTED PER COOT'S TERMINATION FOR CONVENIENCE DIRECTION	AEM			

GTP Georgia Transportation Partners

NORTHWEST I-75/I-575 CORRIDOR

DEPARTMENT OF TRANSPORTATION
STATE OF GEORGIA

JBT J.B. Trimble, Inc.
2550 Heritage Ct, SE Suite 250
Atlanta GA 30339-3062
(770) 952-1022

BRIDGE SHEET 1 OF 2

I-75 / I-575 NORTHWEST CORRIDOR

I-575 REVERSIBLE OVER HAWKINS STORE RD
PLAN AND ELEVATION

COBB COUNTY NH000-0575-01(028)

DRAWING NO. 35-24

STATE	PROJECT NUMBER	SHEET NO.	TOTAL SHEETS
GA	NH000-0575-01(028)		

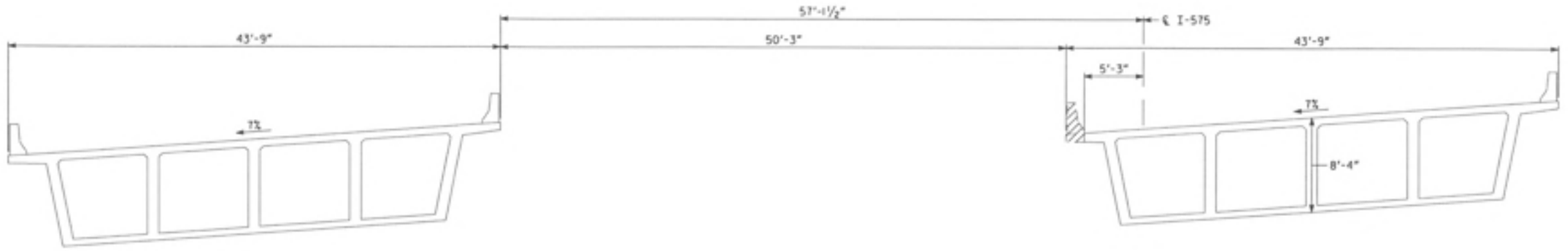

DECK SECTION
(LOOKING AHEAD)

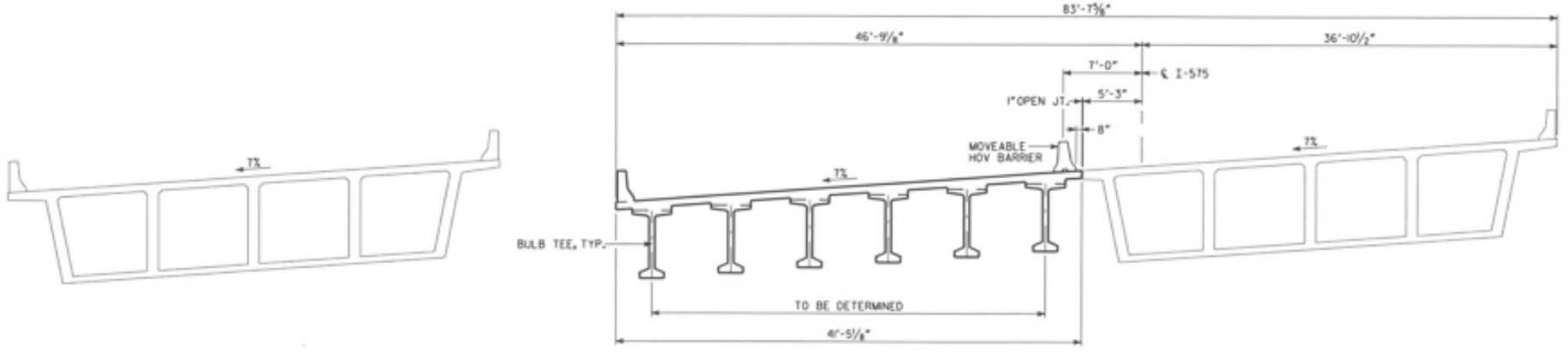

DECK SECTION
(LOOKING AHEAD)

NOTE ※ IMPORTANT NOTICE: THIS DRAWING IS AN INCOMPLETE WORK-IN-PROGRESS AND ITS USE IS SUBJECT TO NOTE 1 ON DRAWING NO. 1-01.

BRIDGE NO. 39

ABBAS ESHAGHI MEYBODI	11/20/09	
DRAWN BY	DATE	
CHECKED BY	DATE	
SUPERVISOR	DATE	
APPROVED	DATE	

REVISIONS

NO.	DATE	DESCRIPTION	DRIG	CHKR	SUPV	APPR
A	6/30/09	Progress Drawings (50 % Revision 2)	AEM	JCR	GLE	SJL
B	9/25/09	50% SUBMISSION	AEM	JCR	GLE	SJL
C	11/30/09	PLOTTED PER GDOT'S TERMINATION FOR CONVENIENCE DIRECTION	AEM			

GTP Georgia Transportation Partners

NORTHWEST I-75/I-575 CORRIDOR

DEPARTMENT OF TRANSPORTATION
STATE OF GEORGIA

JBT J.B. Trimble, Inc.
2550 Heritage Ct, SE Suite 250
Atlanta GA 30339-3062
(770) 952-1022

BRIDGE SHEET
2 OF 2

I-75 / I-575 NORTHWEST CORRIDOR

I-575 REVERSIBLE OVER HAWKINS STORE RD

CONSTRUCTION SEQUENCE

COBB COUNTY NH000-0575-01(028)

DRAWING NO. 35-25

STATE	PROJECT NUMBER	SHEET NO.	TOTAL SHEETS
GA	NH000-0575-01(028)		

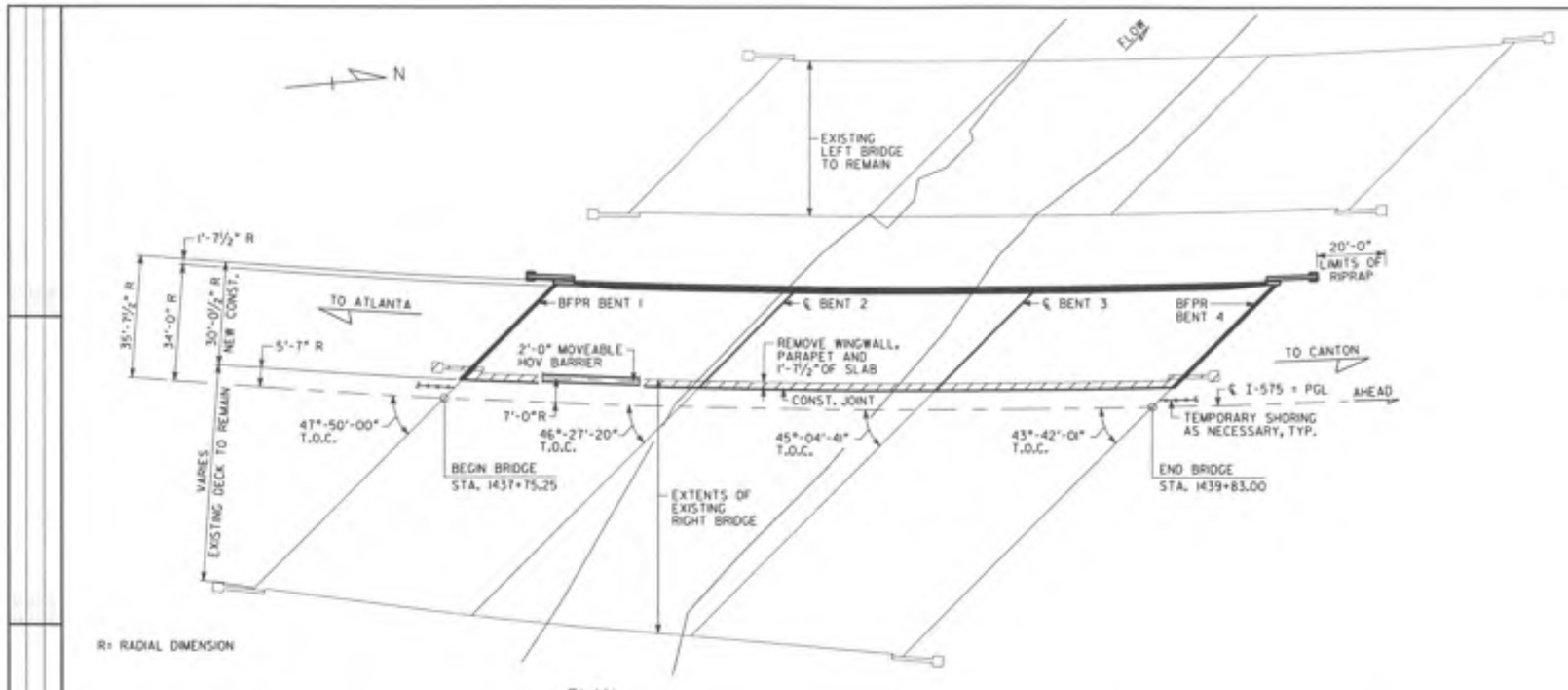

R= RADIAL DIMENSION

PLAN
SCALE: 1" = 20'-0"

BERM ELEVATIONS ⊛		
BENT	LEFT	RIGHT
1	883.97	882.39
4	885.92	884.55

⊛NOTE: FOR BRIDGE ENDROLL STAKING PURPOSES ONLY.

NOTES:

1. ● SLOPE NORMAL TO END BENTS.
2. ●● STATIONS ARE ALONG ℄ I-575 AT THE INTERSECTION OF ℄ I-575 AND BFPR OR ℄ BENT. ELEVATIONS ARE ALONG PGL.
3. END BENT PILES NOT SHOWN.
4. THE PROPOSED BRIDGE DECK IS TO BE BUILT ON A CONSTANT CROSS SLOPE OF 7%, SLOPING DOWN TO THE LEFT.
5. REPAIR AND REPLACE EXISTING RIPRAP AS NEEDED. EXTEND APRON ACROSS TOE OF EXISTING SLOPES.
6. THE MINIMUM BOTTOM OF BEAM ELEVATION FOR THE PROPOSED BRIDGE SHALL BE NO LOWER THAN ELEVATION 885.90
7. THE PROPOSED BRIDGE BOTTOM OF BEAM ELEVATION IS 886.17

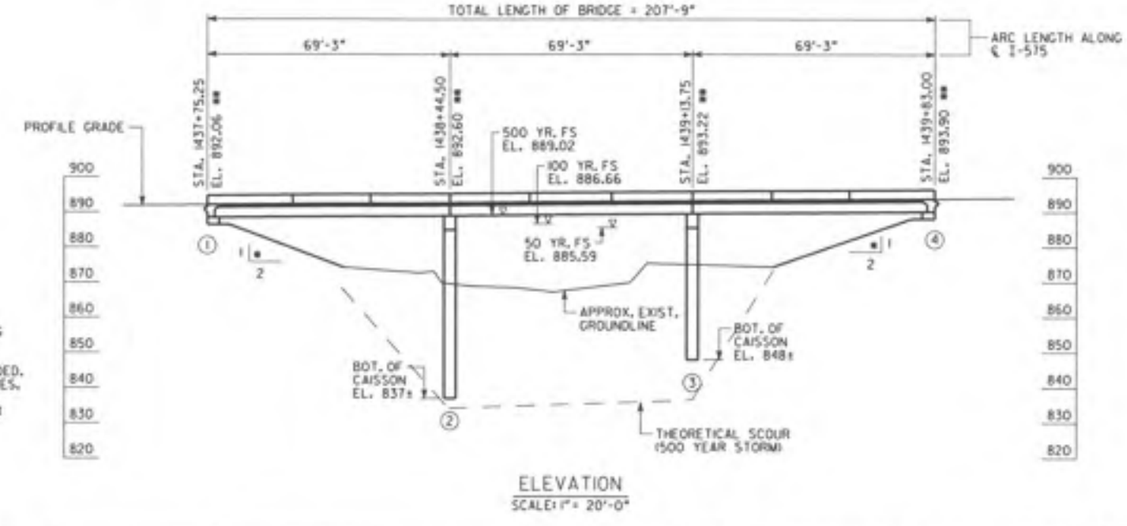

ELEVATION
SCALE: 1" = 20'-0"

P.I. STA. = 1443+73.82
Δ = 40°-33'-11"
D = 1°-59'-22"
T = 1064.00 FT
L = 2038.42 FT
R = 2880.00 FT

℄ I-575
HORIZONTAL CURVE DATA

+0.626% +2.639%
P.V.I. STA. 1443+90.00 EL. 895.87
1380 FT V.C.

I-575
GRADE DATA

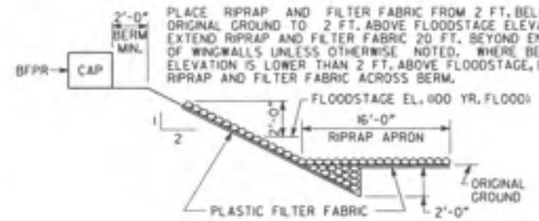

RIPRAP DETAIL
NO SCALE

DESIGN DATA

SPECIFICATIONS ---------- AASHTO 17TH EDITION, 2002
(DESIGNED FOR SEISMIC PERFORMANCE CATEGORY B)
TYPICAL HS20-44 AND/OR MILITARY LOADING --- IMPACT ALLOWED
FUTURE PAVING ALLOWANCE ---------- 30 LBS PER SQ FT

WIDENED BRIDGE CONSISTS OF

3 - 69'-3" TYPE II PSC BEAM SPAN ---------- SPECIAL DESIGN
2 - PILE END BENTS ---------- SPECIAL DESIGN
2 - CONCRETE INTERMEDIATE BENTS ---------- SPECIAL DESIGN

24" TYPE I RIP RAP

UTILITIES

NONE

DRAINAGE DATA

DRAINAGE AREA ---------- 43.2 SQ MI

FLOOD FREQUENCY	DISCHARGE THRU BRIDGE	MEAN VELOCITY	AREA OF OPENING UNDER FLOODSTAGE	BACKWATER
50 YEAR	7774 CFS	6.76 FPS	1151 SQ FT	1.53 FT
100 YEAR	9108 CFS	7.13 FPS	1278 SQ FT	1.81 FT
500 YEAR	12749 CFS	7.22 FPS	1766 SQ FT	2.47 FT

THEORETICAL SCOUR DEPTHS (FT)						
	100 YEAR STORM			500 YEAR STORM		
BENT LOCATION	GENERAL	LOCAL	TOTAL	GENERAL	LOCAL	TOTAL
BENT 2 - 3	22.7	13.3	36.0	26.8	8.4	35.2

EXISTING RIGHT BRIDGE SERIAL NO. 057-0040-0
EXISTING RIGHT BRIDGE I.D. NO. 057-00470-007.93N
PROJECT P.I. NO. 713640

BRIDGE NO. 40

REVISIONS						
NO	DATE	DESCRIPTION	ORIG.	CHKR	SUPV	APPR
A	6/30/09	Progress Drawings (50 % Revision 2)	AEM	JCR	GLE	SJL
B	9/25/09	90% SUBMISSION	AEM	JCR	GLE	SJL
C	11/30/09	PLOTTED PER GDOT'S TERMINATION FOR CONVENIENCE DIRECTION	AEM			

ARRIS ENGEN-HEYROD — 11/20/09
DRAWN BY — DATE
CHECKED BY — DATE
SUPERVISOR — DATE
APPROVED — DATE

GTP Georgia Transportation Partners

NORTHWEST I-75/I-575 CORRIDOR

DEPARTMENT OF TRANSPORTATION
STATE OF GEORGIA

JBT J.B. Trimble, Inc.
2550 Heritage Ct, SE Suite 250
Atlanta GA 30339-3062
(770) 952-1022

BRIDGE SHEET 1 OF 6

I-75 / I-575 NORTHWEST CORRIDOR

I-575 REVERSIBLE OVER NOONDAY CREEK NORTH

PLAN AND ELEVATION

CHEROKEE COUNTY — NH000-0575-01(028) — DRAWING NO: 35-26

STATE	PROJECT NUMBER	SHEET NO.	TOTAL SHEETS
GA	NH000-0575-01(028)		

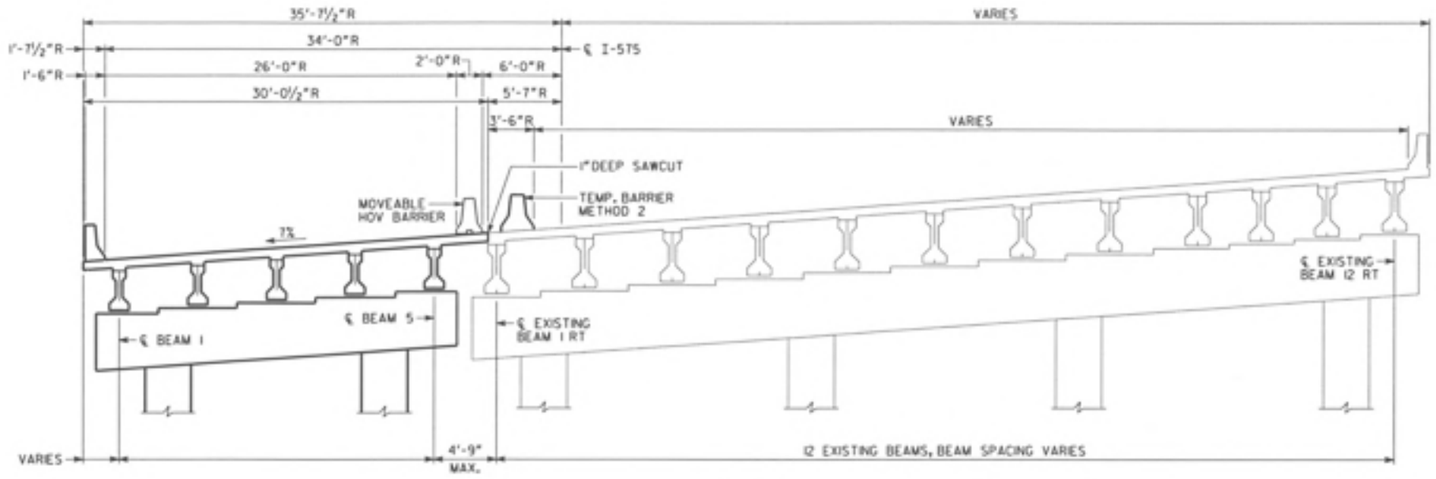

TYPICAL SECTION
(LOOKING AHEAD, RIGHT BRIDGE)

R = RADIAL DIMENSION

CONSTRUCTION SEQUENCE

1. PLACE TEMPORARY BARRIER. MAINTAIN TWO 12'-0" LANES OF TRAFFIC IN EACH DIRECTION ON EXISTING BRIDGES. MAINTAIN EXIT LANE ON EXISTING NB BRIDGE.
2. REMOVE PORTIONS OF EXISTING NORTH BOUND BRIDGE AS NECESSARY FOR NEW CONSTRUCTION.
3. CONSTRUCT NEW SUBSTRUCTURE.
4. CONSTRUCT NEW SUPERSTRUCTURE.

NOTE II IMPORTANT NOTICE: THIS DRAWING IS AN INCOMPLETE WORK-IN-PROGRESS AND ITS USE IS SUBJECT TO NOTE 1 ON DRAWING NO. 1-01.

BRIDGE NO. 40

ABBAS ESHAGIEH-HEYBODI	11/20/09
DRAWN BY	DATE
CHECKED BY	DATE
SUPERVISOR	DATE
APPROVED	DATE

REVISIONS

NO	DATE	DESCRIPTION	ORIG	CHKR	SUPV	APPR
A	6/30/09	Progress Drawings (50 % Revision 2)	AEM	JCR	GLE	S.A.
B	9/25/09	50% SUBMISSION	AEM	JCR	GLE	S.A.
C	11/30/09	PLOTTED PER GDOT'S TERMINATION FOR CONVENIENCE DIRECTION	AEM			

GTP Georgia Transportation Partners

NORTHWEST I-75/I-575 CORRIDOR

DEPARTMENT OF TRANSPORTATION
STATE OF GEORGIA

JBT J.B. Trimble, Inc.
2550 Heritage Ct. SE Suite 250
Atlanta GA 30339-3062
(770) 952-1022

BRIDGE SHEET
2 OF 6

I-75 / I-575 NORTHWEST CORRIDOR

I-575 REVERSIBLE OVER NOONDAY CREEK NORTH
CONSTRUCTION SEQUENCE

CHEROKEE COUNTY NH000-0575-01(028)

DRAWING NO. 35-27

STATE	PROJECT NUMBER	SHEET NO.	TOTAL SHEETS
GA	NH000-0575-01(028)		

R = RADIAL DIMENSION

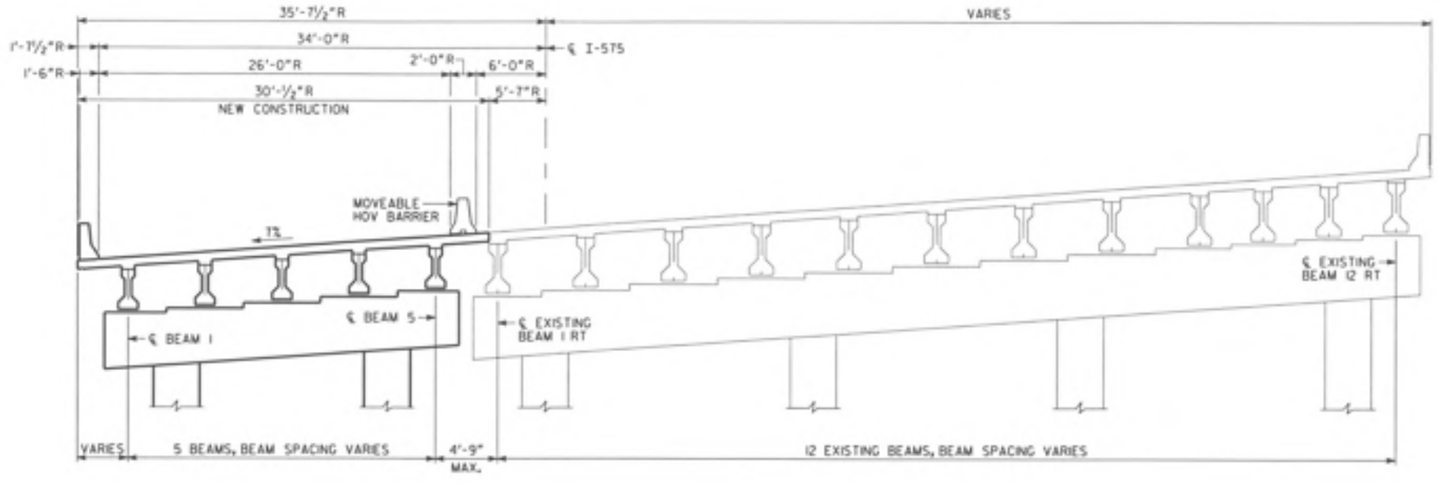

DECK SECTION
(LOOKING AHEAD, RIGHT BRIDGE)

SPAN	AVERAGE DECK WIDTH	BEAM TYPE	NUMBER OF BEAMS	BEAMS	SLAB THICKNESS	AVERAGE BEAM SPACING	AVERAGE BEAM LENGTH	RELEASE CONCRETE STRENGTH (f'ci)	FINAL CONCRETE STRENGTH (f'c)	STRAND TYPE	TOTAL NUMBER OF STRANDS	NUMBER OF RAISED STRANDS	HEIGHT OF RAISED STRANDS
1	30'-½"	II	5	I-5	7½"	6'-0"	67'-9¼"	6,800 PSI	7,800 PSI	0.6"	22	6	0'-11"
2	30'-½"	II	5	I-5	7½"	6'-0"	68'-1⅛"	6,800 PSI	7,800 PSI	0.6"	22	6	0'-11"
3	30'-½"	II	5	I-5	7½"	6'-0"	67'-8⅜"	6,800 PSI	7,800 PSI	0.6"	22	6	0'-11"

NOTES:

1. MAINTAIN 2" CLEARANCE ON ALL REINFORCEMENT UNLESS OTHERWISE NOTED.
2. CARE SHALL BE EXERCISED IN REMOVAL OF EXISTING CONCRETE AND RETAIN EXISTING REINFORCEMENT. EXISTING REINFORCEMENT BARS TO BE SPLICED A MINIMUM OF 2'-6". ANY EXISTING REINFORCEMENT STEEL DAMAGED DURING REMOVAL SHALL BE REPLACED BY THE CONTRACTOR AT NO ADDITIONAL COST.
3. NON-CONTACT LAPS MAY BE USED BETWEEN EXISTING AND NEW TRANSVERSE DECK BARS.

NOTE ¤ IMPORTANT NOTICE! THIS DRAWING IS AN INCOMPLETE WORK-IN-PROGRESS AND ITS USE IS SUBJECT TO NOTE 1 ON DRAWING NO. 1-01.

BRIDGE NO. 40

ABBAS ESHAGHI-MEYBODI	11/20/09	
Drawn BY	DATE	
CHECKED BY	DATE	
SUPERVISOR	DATE	
APPROVED	DATE	

REVISIONS

NO	DATE	DESCRIPTION	ORIG	CHKR	SUPR	APPR
A	6/30/09	Progress Drawings ISO 11 Revision 21	AEM	JCR	GLE	SJL
B	9/25/09	SOIL SUBMISSION	AEM	JCR	GLE	SJL
C	11/30/09	PLOTTED PER CDOT'S TERMINATION FOR CONVENIENCE DIRECTION	AEM			

GTP Georgia Transportation Partners

NORTHWEST I-75/I-575 CORRIDOR

DEPARTMENT OF TRANSPORTATION
STATE OF GEORGIA

JBT J.B. Trimble, Inc.
2550 Heritage Ct, SE Suite 250
Atlanta GA 30339-3062
(770) 952-1022

BRIDGE SHEET 3 OF 6

I-75 / I-575 NORTHWEST CORRIDOR

I-575 REVERSIBLE OVER NOONDAY CREEK NORTH
DECK SECTION

CHEROKEE COUNTY NH000-0575-01(028)

DRAWING NO. 35-28

12/1/2009 5:09:58 PM
n:\jobs\295317\drawings\structural\dgn\Noonday\35.dgn

STATE	PROJECT NUMBER	SHEET NO.	TOTAL SHEETS
GA	NH000-0575-01(028)		

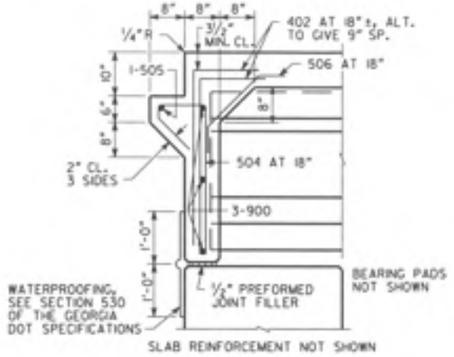

SECTION AT ENDWALL

(BENTS 1 & 4)

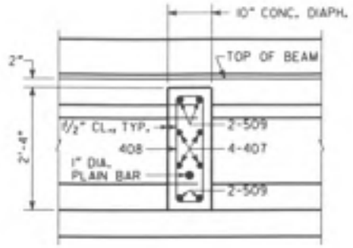

SLAB REINFORCEMENT NOT SHOWN

SECTION THRU DIAPHRAGM

(ALL SPANS)

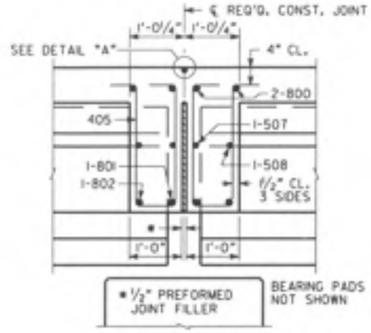

SLAB REINFORCEMENT NOT SHOWN

SECTION THRU EDGE BEAM

(BENT 2 & 3)

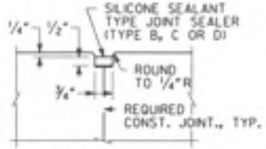

DETAIL "A"

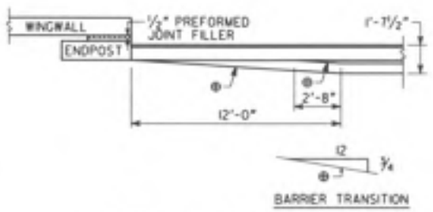

BARRIER TRANSITION DETAIL

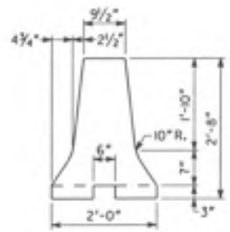

HOV BARRIER DETAIL

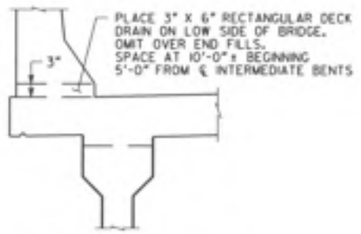

DECK DRAIN DETAIL

* TAPERS TO 0" AT END POST.

** AT CONTRACTOR'S OPTION, REPLACE 10" RADIUS WITH STRAIGHT INTERSECTING SLOPES.

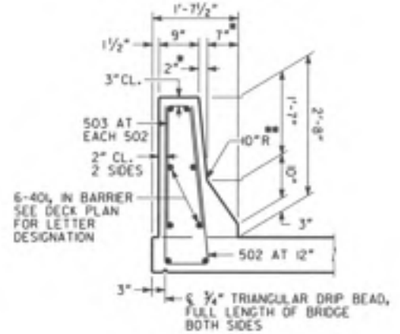

BARRIER DETAIL

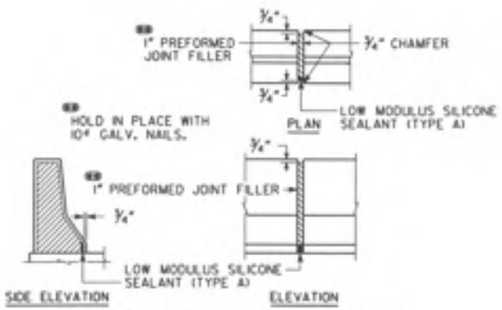

DETAILS OF 1" EXPANSION JOINT IN BARRIER

NOTE = IMPORTANT NOTICE: THIS DRAWING IS AN INCOMPLETE WORK-IN-PROGRESS AND ITS USE IS SUBJECT TO NOTE 1 ON DRAWING NO. 1-01.

BRIDGE NO. 40

ABBAS ESHAGHI-HEYDARI 11/20/09
DRAWN BY DATE
CHECKED BY DATE
SUPERVISOR DATE
APPROVED DATE

REVISIONS

NO	DATE	DESCRIPTION	ORIG	CHKR	SUPV	APPR
A	6/30/09	Progress Drawings (50 % Revision 2)	AEM	JCR	GLE	SJL
B	9/25/09	50% SUBMISSION	AEM	JCR	GLE	SJL
C	11/30/09	PLOTTED PER GDOT'S TERMINATION FOR CONVENIENCE DIRECTION	AEM			

GTP Georgia Transportation Partners

NORTHWEST I-75/I-575 CORRIDOR

DEPARTMENT OF TRANSPORTATION
STATE OF GEORGIA

JBT J.B. Trimble, Inc.
2550 Heritage Ct, SE Suite 250
Atlanta GA 30339-3062
(770) 952-1022

BRIDGE SHEET 4 OF 6

I-75 / I-575 NORTHWEST CORRIDOR

I-575 REVERSIBLE OVER NOONDAY CREEK NORTH

MISCELLANEOUS DETAILS

CHEROKEE COUNTY NH000-0575-01(028)

DRAWING NO. 35-29

STATE	PROJECT NUMBER	SHEET NO.	TOTAL SHEETS
GA	NH000-0575-01(028)		

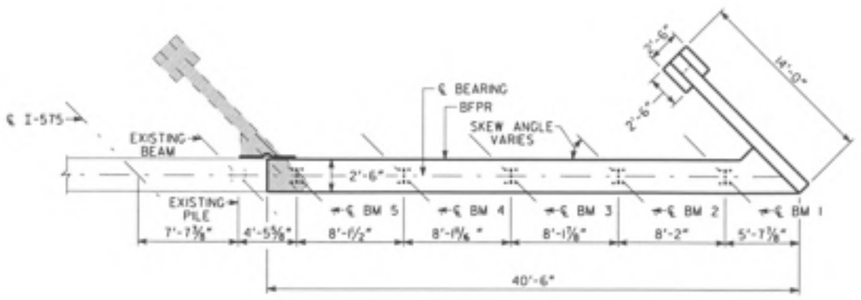

PLAN

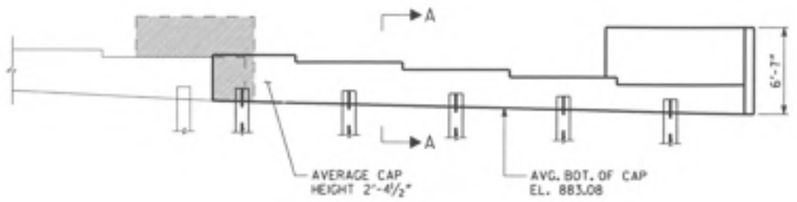

ELEVATION
(BENT 1 LOOKING BACK)

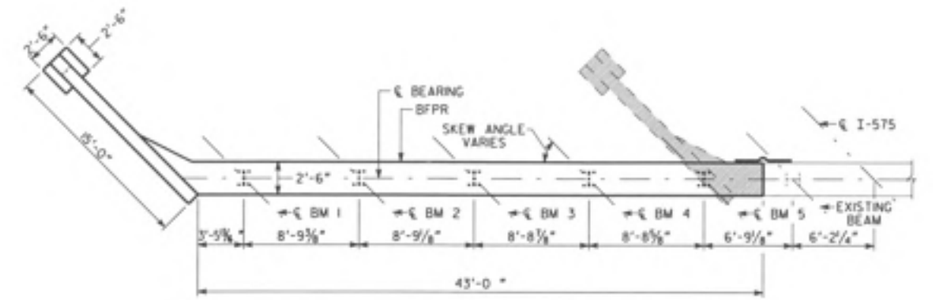

PLAN

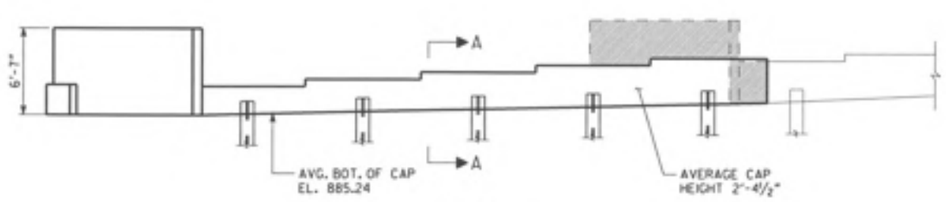

ELEVATION
(BENT 4 LOOKING AHEAD)

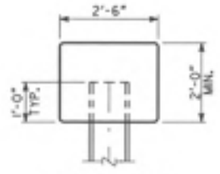

SECTION A-A

NOTE:

1. MAINTAIN 2" CL. ON ALL REINFORCEMENT UNLESS OTHERWISE NOTED.

PLAN DRIVING OBJECTIVE

ALL PILES SHALL BE DRIVEN TO A DRIVING RESISTANCE OF 58 TONS AFTER AN ESTIMATED TIP ELEVATION SHOWN BELOW IS ACHIEVED

BENT	EST. TIP
1	851
4	847

ALL PILES SHALL BE STEEL H, HP 12 X 53

NOTE ⊗ IMPORTANT NOTICE: THIS DRAWING IS AN INCOMPLETE WORK-IN-PROGRESS AND ITS USE IS SUBJECT TO NOTE 1 ON DRAWING NO. 1-01.

BRIDGE NO. 40

ABBAS ESHAGHI-HEYRODI 11/20/09
DRAWN BY DATE
CHECKED BY DATE
SUPERVISOR DATE
APPROVED DATE

REVISIONS						
NO.	DATE	DESCRIPTION	ORIG.	CHKR.	SUPV.	APPR.
A	6/30/09	Progress Drawings ISD 11 Revision 21	AEM	JCR	GLE	SJL
B	9/25/09	SDS SUBMISSION	AEM	JCR	GLE	SJL
C	11/30/09	PLOTTED PER GDOT'S TERmination FOR CONVENIENCE DIRECTION	AEM			

GTP Georgia Transportation Partners

NORTHWEST I-75/I-575 CORRIDOR

DEPARTMENT OF TRANSPORTATION
STATE OF GEORGIA

JBT J.B. Trimble, Inc.
2550 Heritage Ct, SE Suite 250
Atlanta GA 30339-3062
(770) 952-1022

BRIDGE SHEET 5 OF 6

I-75 / I-575 NORTHWEST CORRIDOR

I-575 REVERSIBLE OVER NOONDAY CREEK NORTH
END BENTS

CHEROKEE COUNTY NH000-0575-01(028)

DRAWING NO. 35-30

12/1/2009 10:47:29 PM
n:\traffic\25717\drawings\structure\I-48\preliminary\Noonday\A_03.dgn

STATE	PROJECT NUMBER	SHEET NO.	TOTAL SHEETS
GA	NH000-0575-01(028)		

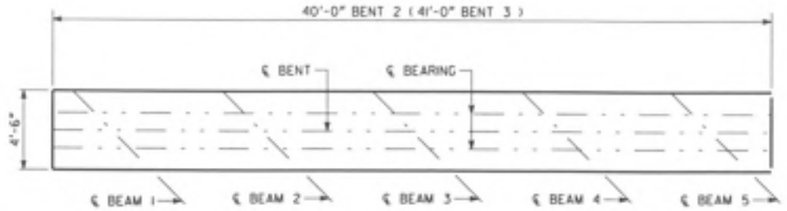

PLAN

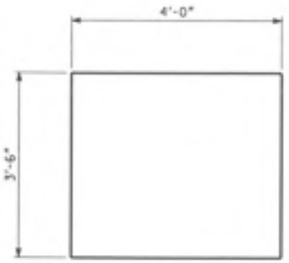

SECTION A-A
(NO SCALE)

SECTION B-B
(NO SCALE)

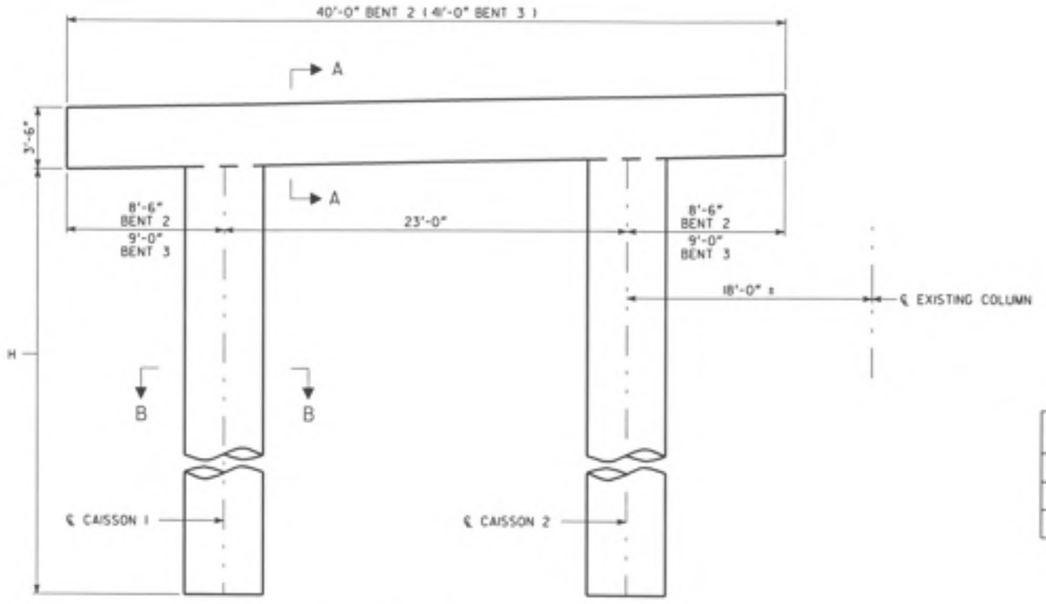

ELEVATION

TABLE OF DIMENSIONS		
BENT	H	BOT. OF CAISS. EL.
2	46'-9"	837
3	36'-6"	848

CAISSON NOTES:

1. CONCRETE FOR DRILLED CAISSONS SHALL BE CLASS AA (f'c = 3500 PSI).
2. DRILLED CAISSONS ARE DESIGNED FOR AN ALLOWABLE BEARING PRESSURE OF 100 KSF ON SOUND ROCK.
3. DRILLED CAISSONS SHALL EXTEND A MINIMUM DEPTH OF 1'-0" INTO SOUND ROCK.
4. PERMANENT CASINGS SHALL BE REQUIRED TO CONSTRUCT DRILLED CAISSONS.
5. CUT OFF PERMANENT CASING AT GROUND LINE OR WATER SURFACE WHICHEVER IS HIGHER.
6. MINIMUM LAP SPLICE FOR #11 CAISSON REINFORCEMENT SHALL BE 9'-0". COST OF REINFORCEMENT REQUIRED FOR A LAP SPLICE SHALL BE INCLUDED IN THE PRICE BID FOR LF DRILLED CAISSON.
7. LIMIT OF PAYMENT FOR CAISSON SHALL BE THE TOP OF CAISSON.
8. SPIRALS SHALL BE TWO (2) CLOSED TURNS AT THE TOP AND BOTTOM OF CAISSONS. SPIRAL SPLICES SHALL BE ACCOMPLISHED BY LAPPING AND WELDING 1.5 TURNS. AT THE CONTRACTOR'S OPTION, #4 HOOP STIRRUPS WITH 2'-0" LAP AT 6" SPACING MAY BE SUBSTITUTED FOR SPIRAL IN CAISSON AT NO ADDITIONAL COST TO THE DEPARTMENT.
9. THE BOTTOM OF DRILLED SHAFTS MUST BE INSPECTED BY THE PROJECT GEOTECHNICAL ENGINEER.

NOTE:

1. MAINTAIN 2" CL. ON ALL REINFORCEMENT UNLESS OTHERWISE NOTED.

NOTE ⊠ IMPORTANT NOTICE: THIS DRAWING IS AN INCOMPLETE WORK-IN-PROGRESS AND ITS USE IS SUBJECT TO NOTE 1 ON DRAWING NO. 1-01.

BRIDGE NO. 40

ABBAS ESHAGHI-HEYDARI	11/20/09	
DRAWN BY	DATE	
CHECKED BY	DATE	
SUPERVISOR	DATE	
APPROVED	DATE	

REVISIONS						
NO	DATE	DESCRIPTION	ORIG	CHKR	SUPV	APPR
A	6/30/09	Progress Drawings (50 % Revision 2)	AEM	JCR	GLE	SJL
B	9/25/09	50% SUBMISSION	AEM	JCR	GLE	SJL
C	11/30/09	PLOTTED PER GDOT'S TERMINATION FOR CONVENIENCE DIRECTION	AEM			

GTP Georgia Transportation Partners

NORTHWEST I-75/I-575 CORRIDOR

DEPARTMENT OF TRANSPORTATION
STATE OF GEORGIA

JBT J.B. Trimble, Inc.
2550 Heritage Ct, SE Suite 250
Atlanta GA 30339-3062
(770) 952-1022

BRIDGE SHEET
6 OF 6

I-75 / I-575 NORTHWEST CORRIDOR

I-575 REVERSIBLE OVER NOONDAY CREEK NORTH
INTERMEDIATE BENTS

CHEROKEE COUNTY NH000-0575-01(028)

DRAWING NO.
35-31

STATE	PROJECT NUMBER	SHEET NO.	TOTAL SHEETS
GA	NH000-0575-01(028)		

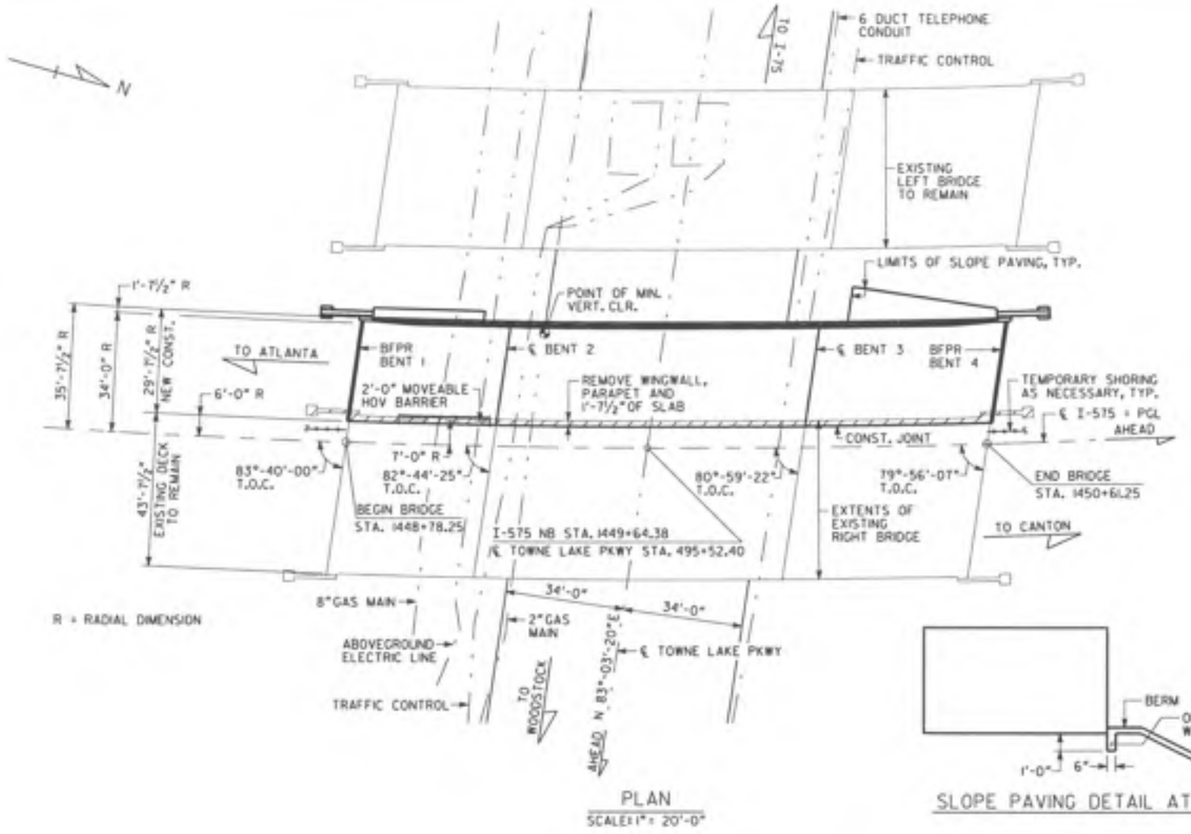

PLAN
SCALE: 1" = 20'-0"

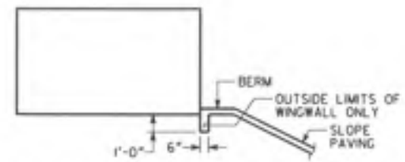

SLOPE PAVING DETAIL AT WINGS

P.I. STA. = 1443+73.82
Δ = 40°-33'-11"
D = 1°-59'-22"
T = 1064.00 FT
L = 2038.42 FT
R = 2880.00 FT

℄ I-575
HORIZONTAL CURVE DATA

+0.626% +2.639%
P.V.I. STA. 1443+90.00 EL. 895.87
1380 FT V.C.

I-575
GRADE DATA

STA. 493+00.00 EL. 886.40	STA. 493+50.00 EL. 886.55	STA. 494+00.00 EL. 886.70	STA. 494+50.00 EL. 886.95	STA. 495+00.00 EL. 887.23	STA. 495+50.00 EL. 887.57	STA. 496+00.00 EL. 888.04	STA. 496+50.00 EL. 888.46	STA. 497+00.00 EL. 888.79

TOWNE LAKE PKWY
GRADE DATA

DESIGN DATA

SPECIFICATIONS ---------- AASHTO 17TH EDITION, 2002
(DESIGNED FOR SEISMIC PERFORMANCE CATEGORY B)
TYPICAL HS20-44 AND/OR MILITARY LOADING --- IMPACT ALLOWED
FUTURE PAVING ALLOWANCE ---------- 30 LBS PER SQ FT

WIDENED BRIDGE CONSISTS OF

1 - 42'-0" AASHTO TYPE I-MOD PSC BEAM SPAN ----- SPECIAL DESIGN
1 - 88'-0" AASHTO TYPE III PSC BEAM SPAN ----- SPECIAL DESIGN
1 - 53'-0" AASHTO TYPE I-MOD PSC BEAM SPAN ----- SPECIAL DESIGN
2 - STEEL H PILE END BENTS ---------- SPECIAL DESIGN
2 - CONCRETE INTERMEDIATE BENTS ---------- SPECIAL DESIGN
24" TYPE I RIP RAP

UTILITIES ON BRIDGE

NONE

EXISTING UTILITIES UNDER BRIDGE

8" STEEL GAS MAIN
ABOVERGROUND ELECTRIC LINE
TRAFFIC CONTROLS
2" STEEL GAS MAIN
6 DUCT TELEPHONE CONDUIT

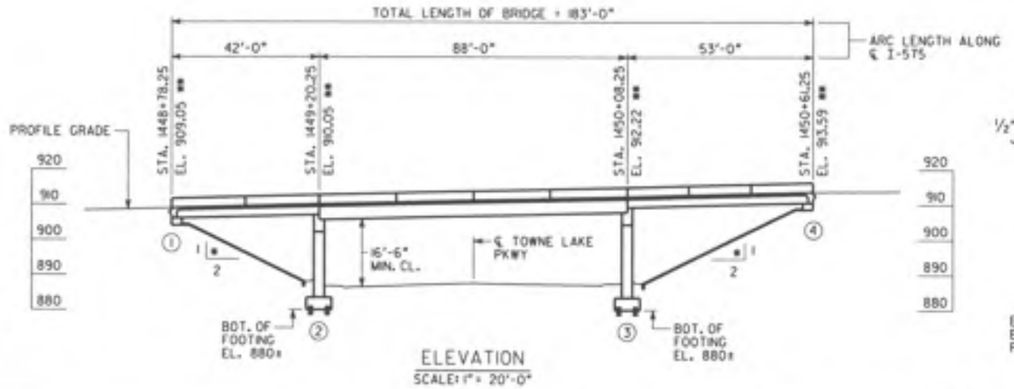

ELEVATION
SCALE: 1" = 20'-0"

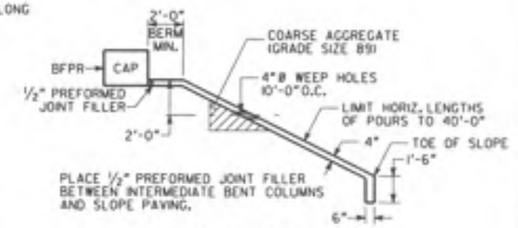

SLOPE PAVING DETAIL

EXISTING RIGHT BRIDGE SERIAL NO. 057-0043-0
EXISTING RIGHT BRIDGE I.D. NO. 057-0041D-007.93N
PROJECT P.I. NO. 711430

NOTES:

1. * SLOPE NORMAL TO END BENTS.
2. ** STATIONS ARE ALONG ℄ I-575 AT THE INTERSECTION OF ℄ I-575 AND BFPR OR ℄ BENT. ELEVATIONS ARE ALONG PGL.
3. END BENT PILES NOT SHOWN.
4. THE PROPOSED BRIDGE DECK IS TO BE BUILT ON A CONSTANT CROSS SLOPE OF 1%, SLOPING DOWN TO THE LEFT.

BERM ELEVATIONS (*)		
BENT	LEFT	RIGHT
1	901.56	900.94
4	906.09	905.53

(*)NOTE: FOR BRIDGE ENDROLL STAKING PURPOSES ONLY.

BRIDGE NO. 41

ABBAS ESHAGHI-MEYBODI	11/20/09	
DRAWN BY	DATE	
CHECKED BY	DATE	
SUPERVISOR	DATE	
APPROVED	DATE	

REVISIONS

NO	DATE	DESCRIPTION	DRG	CHKR	SUPV	APPR
A	6/30/09	Progress Drawings ISO 11 Revision 21	ABM	JCR	GLE	SJL
B	9/25/09	SOIL SUBMISSION	ABM	JCR	GLE	SJL
C	11/30/09	PLOTTED PER GDOT'S TERMINATION FOR CONVENIENCE DIRECTION	ABM			

Georgia Transportation Partners

I-75/I-575 NORTHWEST CORRIDOR

DEPARTMENT OF TRANSPORTATION
STATE OF GEORGIA

JBT J.B. Trimble, Inc.
2550 Heritage Ct, SE Suite 250
Atlanta GA 30339-3062
(770) 952-1022

BRIDGE SHEET 1 OF 6

I-75 / I-575 NORTHWEST CORRIDOR

I-575 REVERSIBLE OVER TOWNE LAKE PKWY

PLAN AND ELEVATION

CHEROKEE COUNTY NH000-0575-01(028)

DRAWING NO. 35-32

STATE	PROJECT NUMBER	SHEET NO.	TOTAL SHEETS
GA	NH000-0575-01(028)		

R = RADIAL DIMENSIONS

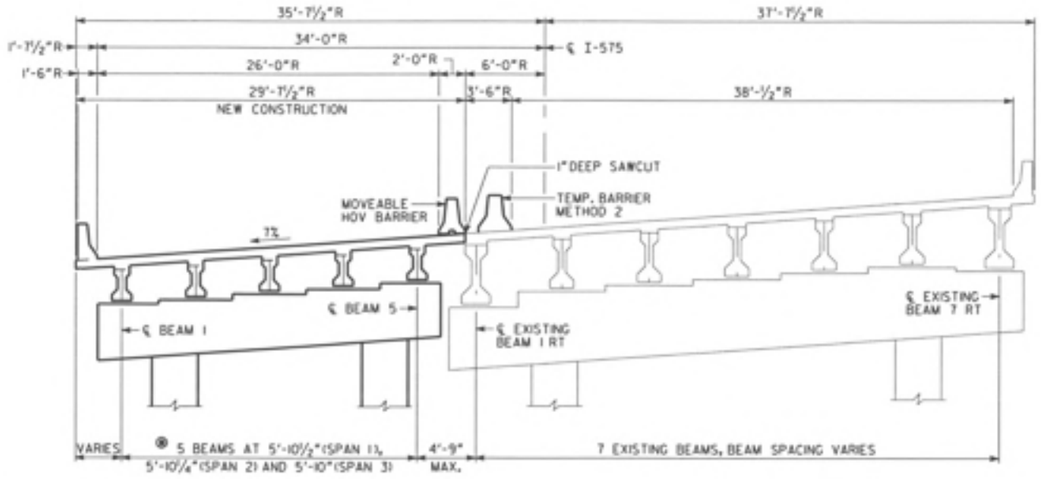

Ⓡ ALL BEAMS ARE PARALLEL OFFSETS FROM CHORDS ALONG ℄ I-575 MEASURED BETWEEN ℄ BENTS OR BACK FACE PAVING REST.

TYPICAL SECTION
(LOOKING AHEAD, RIGHT BRIDGE)

CONSTRUCTION SEQUENCE

1. PLACE TEMPORARY BARRIER, MAINTAIN TWO 12'-0" LANES OF TRAFFIC IN EACH DIRECTION ON EXISTING BRIDGES. MAINTAIN EXIT LANE ON EXISTING NB BRIDGE.
2. REMOVE PORTIONS OF EXISTING NORTH BOUND BRIDGE AS NECESSARY FOR NEW CONSTRUCTION.
3. CONSTRUCT NEW SUBSTRUCTURE.
4. CONSTRUCT NEW SUPERSTRUCTURE.

NOTE ® IMPORTANT NOTICE: THIS DRAWING IS AN INCOMPLETE WORK-IN-PROGRESS AND ITS USE IS SUBJECT TO NOTE 1 ON DRAWING NO. 1-01.

BRIDGE NO. 41

ABBAS ESHAGHI-MEYBODI	11/20/09
DRAWN BY	DATE
CHECKED BY	DATE
SUPERVISOR	DATE
APPROVED	DATE

REVISIONS

NO	DATE	DESCRIPTION	DRG	CHKR	SUPV	APPR
A	6/30/09	Progress Drawings ISO 11 Revision 21	AEM	JCR	GLE	SJL
B	9/25/09	SOIL SUBMISSION	AEM	JCR	GLE	SJL
C	11/30/09	PLOTTED PER GDOT'S TERMINATION FOR CONVENIENCE DIRECTION	AEM			

GTP Georgia Transportation Partners

I-75/I-575 NORTHWEST CORRIDOR

DEPARTMENT OF TRANSPORTATION
STATE OF GEORGIA

JBT J.B. Trimble, Inc.
2550 Heritage Ct, SE Suite 250
Atlanta GA 30339-3062
(770) 952-1022

BRIDGE SHEET 2 OF 6

I-75 / I-575 NORTHWEST CORRIDOR

I-575 REVERSIBLE OVER TOWNE LAKE PKWY

CONSTRUCTION SEQUENCE

CHEROKEE COUNTY NH000-0575-01(028)

DRAWING NO. 35-33

12/1/2009 10:18:35 PM
n:\tra\25571\Preliminary\Tunnel.dwg,TS.dgn

STATE	PROJECT NUMBER	SHEET NO.	TOTAL SHEETS
GA.	NH000-0575-01(028)		

R = RADIAL DIMENSIONS

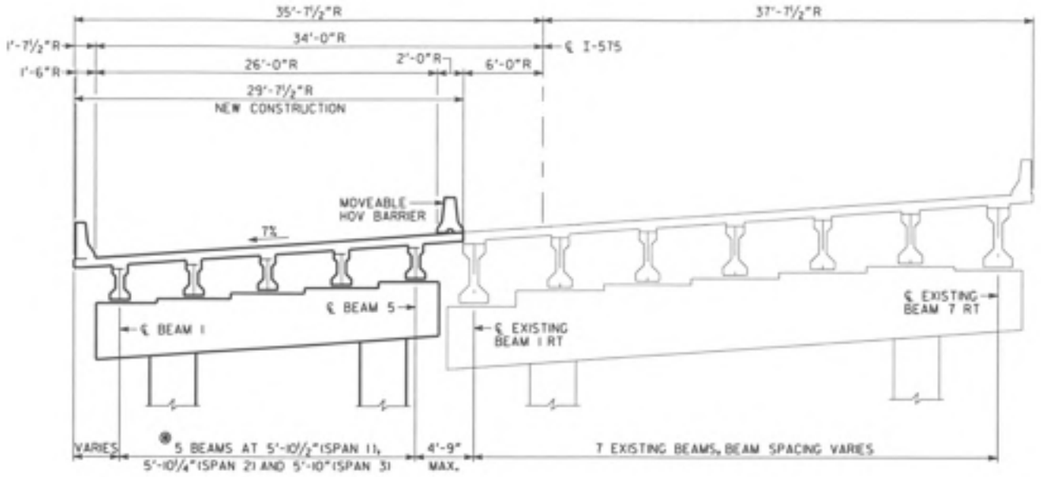

● ALL BEAMS ARE PARALLEL OFFSETS FROM CHORDS ALONG ℄ I-575 MEASURED BETWEEN ℄ BENTS OR BACK FACE PAVING REST.

DECK SECTION

(LOOKING AHEAD, RIGHT BRIDGE)

SPAN	AVERAGE DECK WIDTH	BEAM TYPE	NUMBER OF BEAMS	BEAMS	SLAB THICKNESS	BEAMS SPACING	AVERAGE BEAM LENGTH	RELEASE CONCRETE STRENGTH (f'ci)	FINAL CONCRETE STRENGTH (f'c)	STRAND TYPE	TOTAL NUMBER OF STRANDS	NUMBER OF RAISED STRANDS	HEIGHT OF RAISED STRANDS
1	29'-7½"	TYPE I MOD	5	I-5	7⅜"	5'-10½"	40'-8⅝"	4500 PSI	5000 PSI	½"SPECIAL	12	0	0'-0"
2	29'-7½"	TYPE III	5	I-5	7¼"	5'-10¼"	81'-4"	5700 PSI	7000 PSI	½"SPECIAL	32	8	0'-11"
3	29'-7½"	TYPE I MOD	5	I-5	7¼"	5'-10"	51'-8⅝"	5200 PSI	6000 PSI	½"SPECIAL	20	6	0'-11"

NOTES:

1. MAINTAIN 2" CLEARANCE ON ALL REINFORCEMENT UNLESS OTHERWISE NOTED.
2. CARE SHALL BE EXERCISED IN REMOVAL OF EXISTING CONCRETE AND RETAIN EXISTING REINFORCEMENT. EXISTING REINFORCEMENT BARS TO BE SPLICED A MINIMUM OF 2'-6". ANY EXISTING REINFORCEMENT STEEL DAMAGED DURING REMOVAL SHALL BE REPLACED BY THE CONTRACTOR AT NO ADDITIONAL COST.
3. NON-CONTACT LAPS MAY BE USED BETWEEN EXISTING AND NEW TRANSVERSE DECK BARS.

NOTE ※ IMPORTANT NOTICE: THIS DRAWING IS AN INCOMPLETE WORK-IN-PROGRESS AND ITS USE IS SUBJECT TO NOTE 1 ON DRAWING NO. 1-01.

BRIDGE NO. 41

ABBAS ESANGEH-MEYBODI 11/20/09
DRAWN BY DATE
CHECKED BY DATE
SUPERVISOR DATE
APPROVED DATE

REVISIONS							
NO	DATE	DESCRIPTION	ORIG	CHKR	SUPV	APPR
A	6/30/09	Progress Drawings (50 % Revision 2)	AEM	JCR	GLE	SJL
B	9/25/09	SDC SUBMISSION	AEM	JCR	GLE	SJL
C	11/30/09	PLOTTED PER CDOT'S TERMINATION FOR CONVENIENCE DIRECTION	AEM			

GTP Georgia Transportation Partners

NORTHWEST I-75/I-575 CORRIDOR

DEPARTMENT OF TRANSPORTATION
STATE OF GEORGIA

JBT J.B. Trimble, Inc.
2550 Heritage Ct, SE Suite 250
Atlanta GA 30339-3062
(770) 952-1022

BRIDGE SHEET 3 OF 6

I-75 / I-575 NORTHWEST CORRIDOR

I-575 REVERSIBLE OVER TOWNE LAKE PKWY
DECK SECTION

CHEROKEE COUNTY NH000-0575-01(028)

DRAWING NO. 35-34

n:\ga\295717\design\roadway\plans\35-34.dgn 12/1/2009 9:18:28 PM

STATE	PROJECT NUMBER	SHEET NO.	TOTAL SHEETS
GA	NH000-0575-01(028)		

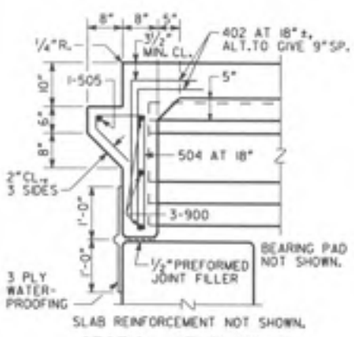

SECTION AT ENDWALL

(BENTS 1 & 4)

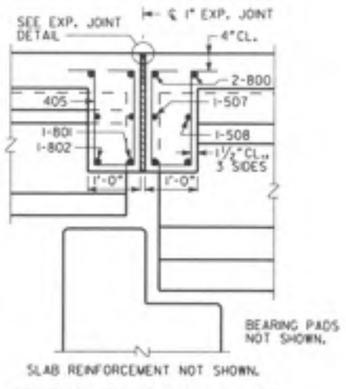

SECTION THRU EDGE BEAM

(BENT 2, BENT 3 SIMILAR)

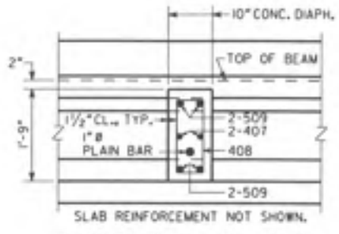

SECTION THRU DIAPHRAGM

(SPANS 1 & 3)

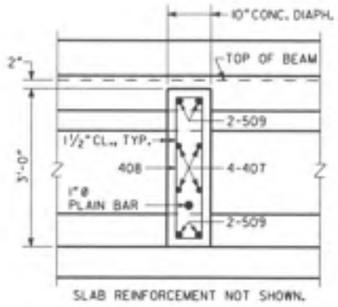

SECTION THRU DIAPHRAGM

(SPAN 2)

* TAPERS TO 0" AT END POST.

** AT CONTRACTOR'S OPTION, REPLACE 10" RADIUS WITH STRAIGHT INTERSECTING SLOPES.

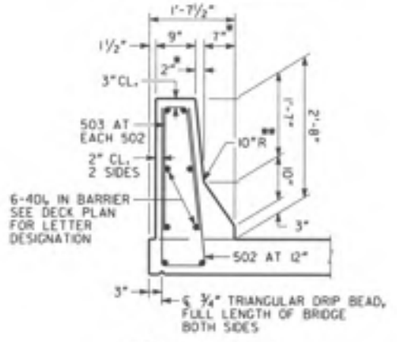

BARRIER DETAIL

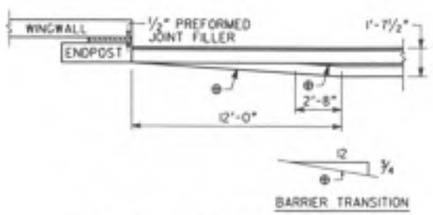

BARRIER TRANSITION DETAIL

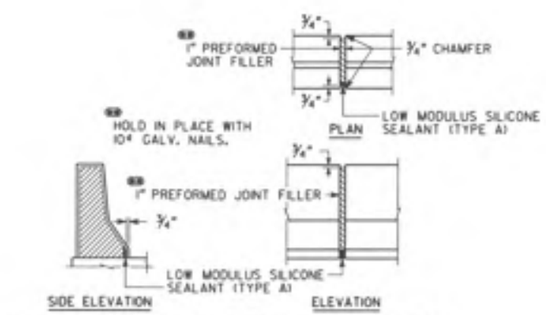

DETAILS OF 1" EXPANSION JOINT IN BARRIER

JOINT OPENING		
TEMPERATURE (°F)	BENT 2 W (IN.)	BENT 3 W (IN.)
30	1.03	0.86
60	0.75	0.75
90	0.47	0.64

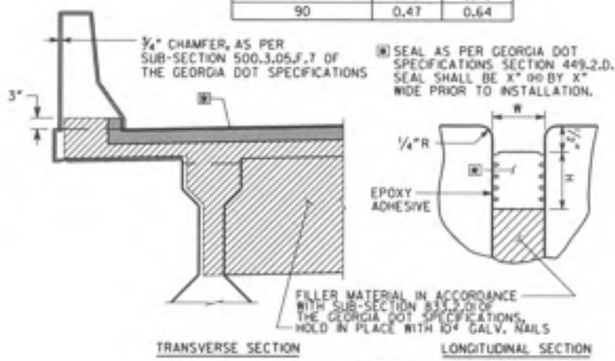

EXPANSION JOINT DETAILS

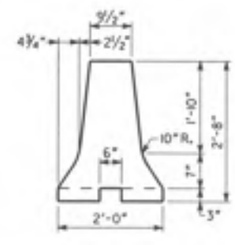

HOV BARRIER DETAIL

NOTE ⊠ IMPORTANT NOTICE: THIS DRAWING IS AN INCOMPLETE WORK-IN-PROGRESS AND ITS USE IS SUBJECT TO NOTE 1 ON DRAWING NO. 1-01.

BRIDGE NO. 41

REVISIONS						
NO.	DATE	DESCRIPTION	DRG.	CHK'R	SUPV	APPR
A	6/30/09	Progress Drawings (50 % Revision 2)	AEW	JCR	GLE	SJL
B	9/25/09	SOIL SUBMISSION	AEW	JCR	GLE	SJL
C	11/30/09	PLOTTED PER GDOT'S TERMINATION FOR CONVENIENCE DIRECTION	AEW			

ABBAS ESHAGHI-HEYDARI 11/20/09
DRAWN BY DATE
CHECKED BY DATE
SUPERVISOR DATE
APPROVED DATE

GTP Georgia Transportation Partners

NORTHWEST I-75/I-575 CORRIDOR

DEPARTMENT OF TRANSPORTATION
STATE OF GEORGIA

JBT J.B. Trimble, Inc.
2550 Heritage Ct, SE Suite 250
Atlanta GA 30339-3062
(770) 952-1022

BRIDGE SHEET 4 OF 6

I-75 / I-575 NORTHWEST CORRIDOR

I-575 REVERSIBLE OVER TOWNE LAKE PKWY

MISCELLANEOUS DETAILS

CHEROKEE COUNTY NH000-0575-01(028)

DRAWING NO. 35-35

STATE	PROJECT NUMBER	SHEET NO.	TOTAL SHEETS
GA	NH000-0575-01(028)		

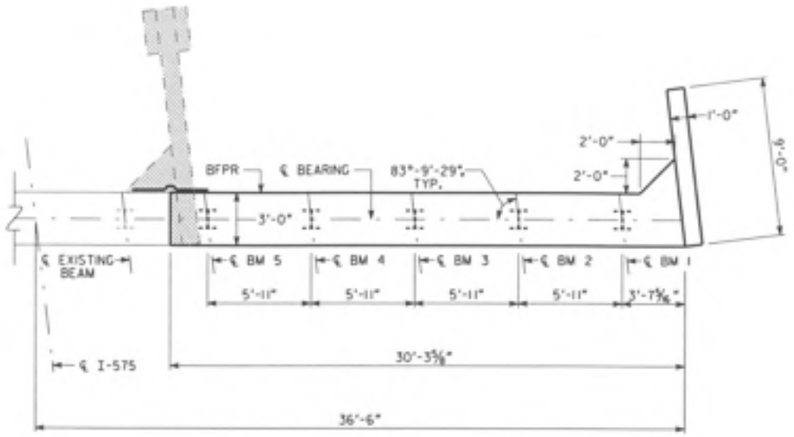

PLAN
BENT 1

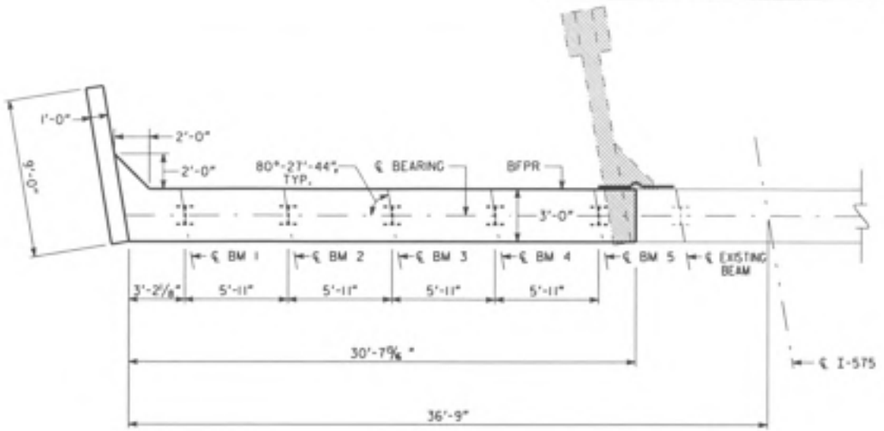

PLAN
BENT 4

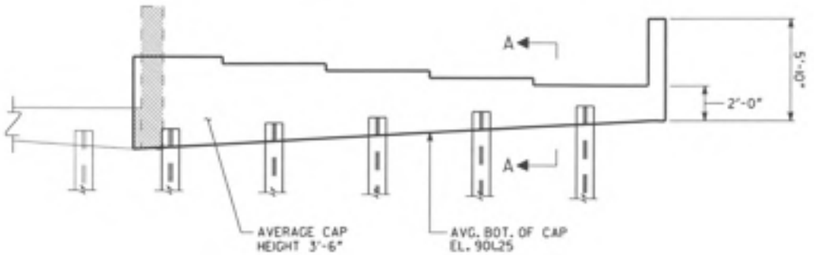

ELEVATION
BENT 1 LOOKING BACK

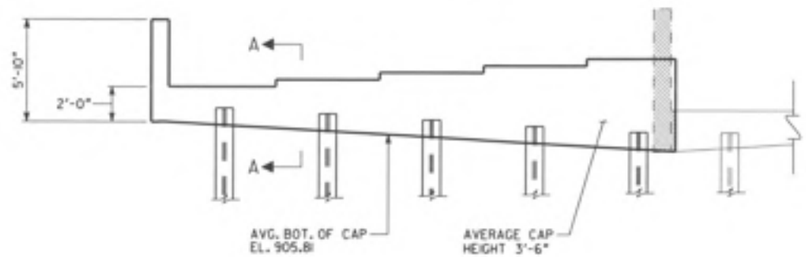

ELEVATION
BENT 4 LOOKING AHEAD

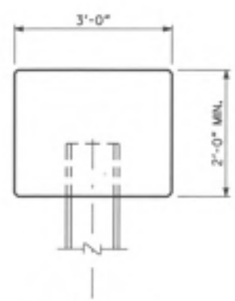

SECTION A-A
NO SCALE

NOTE:

1. MAINTAIN 2" CL. ON ALL REINFORCEMENT UNLESS OTHERWISE NOTED.

PLAN DRIVING OBJECTIVE

ALL PILES SHALL BE DRIVEN TO A DRIVING RESISTANCE OF 41 TONS AFTER AN ESTIMATED TIP ELEVATION SHOWN BELOW IS ACHIEVED

BENT	EST. TIP
1	850
4	857

ALL PILES SHALL BE STEEL H, HP 10 X 42

NOTE = IMPORTANT NOTICE: THIS DRAWING IS AN INCOMPLETE WORK-IN-PROGRESS AND ITS USE IS SUBJECT TO NOTE 1 ON DRAWING NO. 1-01.

BRIDGE NO. 41

ABBAS ESHAGIEH-MEYBODI	11/20/09
DRAWN BY	DATE
CHECKED BY	DATE
SUPERVISOR	DATE
APPROVED	DATE

REVISIONS

NO	DATE	DESCRIPTION	DRG	CHKR	SUPV	APPR
A	6/30/09	Progress Drawings (50 11 Revision 2)	AEW	JCR	GLE	SJL
B	9/25/09	SOIL SUBMISSION	AEW	JCR	GLE	SJL
C	11/30/09	PLOTTED PER GDOT'S TERMINATION FOR CONVENIENCE DIRECTION	AEW			

GTP Georgia Transportation Partners

NORTHWEST I-75/I-575 CORRIDOR

DEPARTMENT OF TRANSPORTATION
STATE OF GEORGIA

JBT J.B. Trimble, Inc.
2550 Heritage Ct, SE Suite 250
Atlanta GA 30339-3062
(770) 952-1022

BRIDGE SHEET
5 OF 6

I-75 / I-575 NORTHWEST CORRIDOR

I-575 REVERSIBLE OVER TOWNE LAKE PKWY
END BENTS

CHEROKEE COUNTY NH000-0575-01(028)

DRAWING NO. 35-36

STATE	PROJECT NUMBER	SHEET NO.	TOTAL SHEETS
GA	NH000-0575-01(028)		

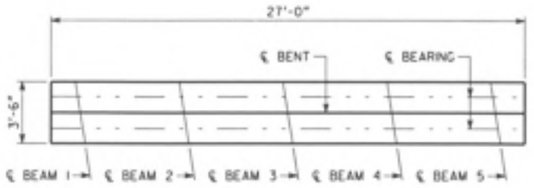

PLAN

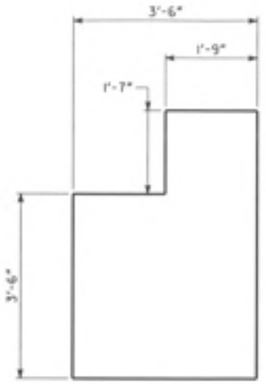

SECTION A-A

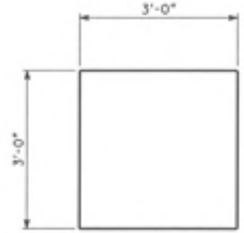

SECTION B-B

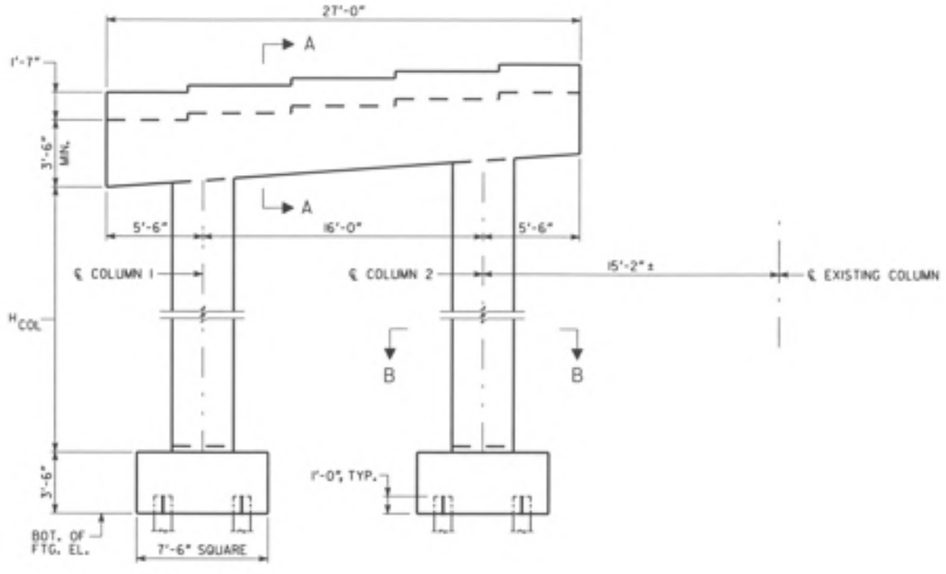

ELEVATION

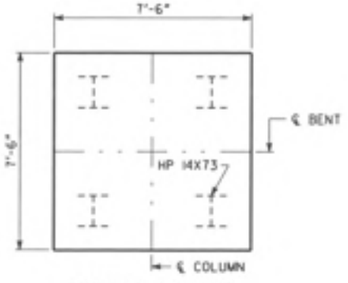

FOOTING LAYOUT

TABLE OF DIMENSIONS		
BENT	H_{COL}	BOT. OF FTG. EL.
2	21'-2"	880
3	23'-4"	880

NOTE:

1. MAINTAIN 2"CL. ON ALL REINFORCEMENT UNLESS OTHERWISE NOTED.

PLAN DRIVING OBJECTIVE

ALL PILES SHALL BE DRIVEN TO A DRIVING RESISTANCE OF 96 TONS AFTER AN ESTIMATED TIP ELEVATION SHOWN BELOW IS ACHIEVED

BENT	EST. TIP
2	849
3	865

ALL PILES SHALL BE STEEL H, HP 14 X 73

NOTE II IMPORTANT NOTICE: THIS DRAWING IS AN INCOMPLETE WORK-IN-PROGRESS AND ITS USE IS SUBJECT TO NOTE I ON DRAWING NO. 1-01.

BRIDGE NO. 41

ABBAS ESHAGHPOUR 11/20/09
DRAWN BY DATE
CHECKED BY DATE
SUPERVISOR DATE
APPROVED DATE

REVISIONS						
NO	DATE	DESCRIPTION	ORIG	CHKR	SUPV	APPR
A	6/30/09	Progress Drawings ISO II Revision 2)	AEM	JCR	GLE	SJL
B	9/25/09	SOG SUBMISSION	AEM	JCR	GLE	SJL
C	11/30/09	PLOTTED PER GDOT'S TERMINATION FOR CONVENIENCE DIRECTION	AEM			

GTP Georgia Transportation Partners

NORTHWEST I-75/I-575 CORRIDOR

DEPARTMENT OF TRANSPORTATION
STATE OF GEORGIA

JBT J.B. Trimble, Inc.
2550 Heritage Ct, SE Suite 250
Atlanta GA 30339-3062
(770) 952-1022

BRIDGE SHEET 6 OF 6

I-75 / I-575 NORTHWEST CORRIDOR

I-575 REVERSIBLE OVER TOWNE LAKE PKWY

INTERMEDIATE BENTS

CHEROKEE COUNTY NH000-0575-01(028) DRAWING NO. 35-37

STATE	PROJECT NUMBER	SHEET NO.	TOTAL SHEETS
GA	NH000-0575-01(028)		

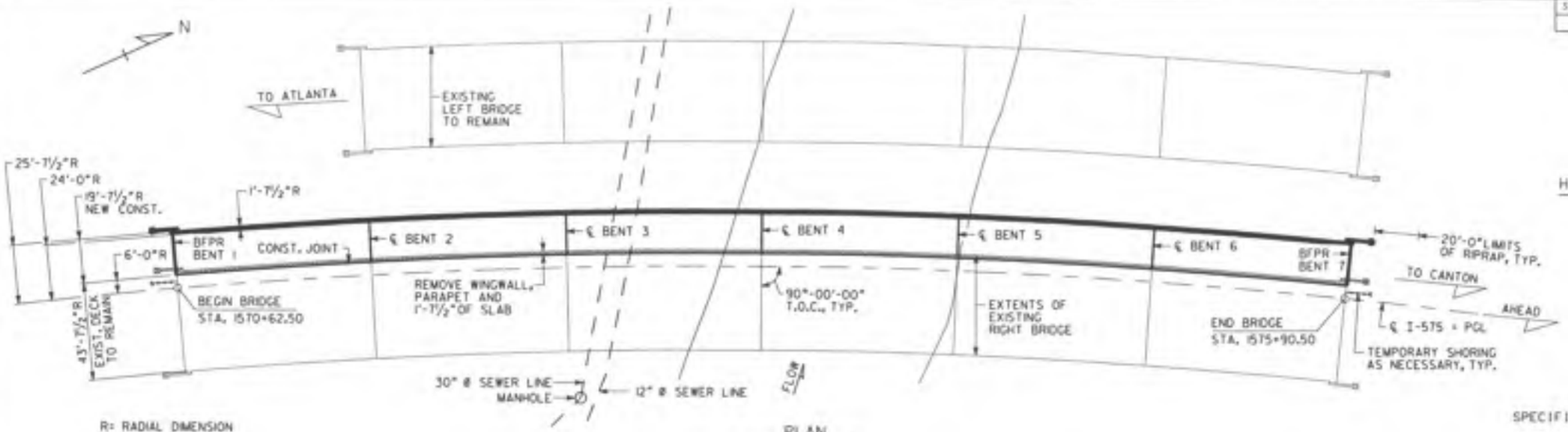

R= RADIAL DIMENSION

PLAN
SCALE: 1" = 30'-0"

P.I. STA. = 1571+36.58
Δ = 34°-59'-10"
D = 2°-00'-12"
T = 901.38 FT
L = 1746.39 FT
R = 2860.00 FT

℄ I-575
HORIZONTAL CURVE DATA

-2.9952% +3.0000%
P.V.I. STA. 1573+59.50 EL. 886.88
1200 FT V.C.

I-575
GRADE DATA

BERM ELEVATIONS ⊛		
BENT	LEFT	RIGHT
1	891.46	890.55
7	890.83	889.92

⊛NOTE: FOR BRIDGE ENDROLL STAKING PURPOSES ONLY.

DESIGN DATA

SPECIFICATIONS ---------- AASHTO 17TH EDITION, 2002
(DESIGNED FOR SEISMIC PERFORMANCE CATEGORY B)
TYPICAL HS20-44 AND/OR MILITARY LOADING --- IMPACT ALLOWED
FUTURE PAVING ALLOWANCE ---------- 30 LBS PER SQ FT

WIDENED BRIDGE CONSISTS OF

6 - 88'-0" BULB TEE, 54 IN, PSC BEAM SPANS -------- SPECIAL DESIGN
2 - PILE END BENTS -------- SPECIAL DESIGN
5 - CONCRETE INTERMEDIATE BENTS -------- SPECIAL DESIGN

24" TYPE I RIP RAP

EXISTING UTILITIES UNDER BRIDGE

30" STEEL SANITARY SEWER LINE
12" STEEL SANITARY SEWER LINE

DRAINAGE DATA

DRAINAGE AREA ---------- 142.0 SQ MI

RIVER FLOODS

FLOOD FREQUENCY	DISCHARGE THRU BRIDGE	MEAN VELOCITY	AREA OF OPENING UNDER FLOODSTAGE	BACKWATER
50 YEAR	15,780 CFS	5.55 FPS	2,846 SQ FT	0.16 FT
100 YEAR	18,250 CFS	5.80 FPS	3,145 SQ FT	0.17 FT
500 YEAR	24,913 CFS	6.39 FPS	3,901 SQ FT	0.20 FT

ABNORMAL FLOODS

FLOOD FREQUENCY	DISCHARGE THRU BRIDGE	MEAN VELOCITY	AREA OF OPENING UNDER FLOODSTAGE	BACKWATER
50 YEAR	15,780 CFS	3.35 FPS	4,705 SQ FT	0.06 FT
100 YEAR	18,250 CFS	3.69 FPS	4,945 SQ FT	0.08 FT
500 YEAR	24,913 CFS	4.80 FPS	5,187 SQ FT	0.13 FT

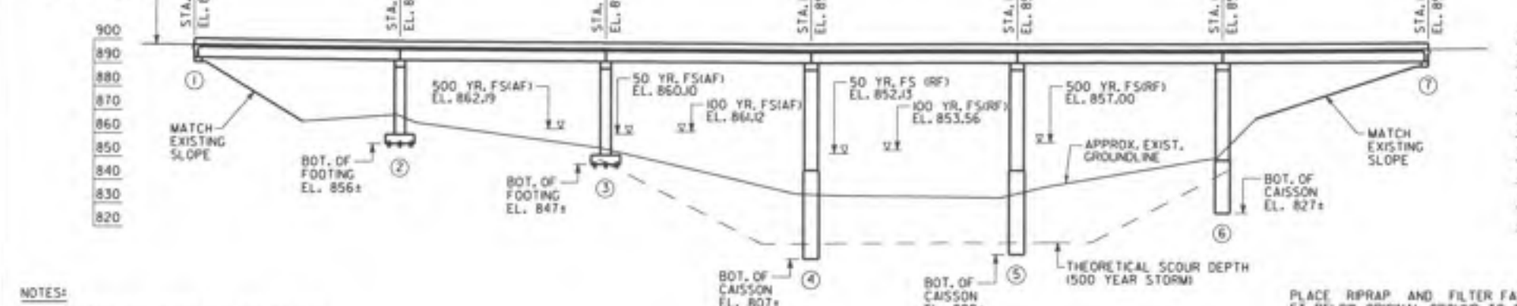

ELEVATION
SCALE: 1" = 30'-0"

NOTES:

1. ** STATIONS ARE ALONG ℄ I-575 AT THE INTERSECTION OF ℄ I-575 AND BFPR OR ℄ BENT. ELEVATIONS ARE ALONG PGL.
2. END BENT PILES NOT SHOWN.
3. THE PROPOSED BRIDGE DECK IS TO BE BUILT ON A CONSTANT CROSS SLOPE OF 7%, SLOPING DOWN TO THE RIGHT.
4. REPAIR AND REPLACE EXISTING RIPRAP AS NEEDED. EXTEND APRON ACROSS TOE OF EXISTING SLOPES.
5. THE MINIMUM BOTTOM OF BEAM ELEVATION FOR THE PROPOSED BRIDGE SHALL BE NO LOWER THAN ELEVATION 863.0
6. THE PROPOSED BRIDGE BOTTOM OF BEAM ELEVATION IS 890.95
7. ALL BENTS ARE RADIAL.

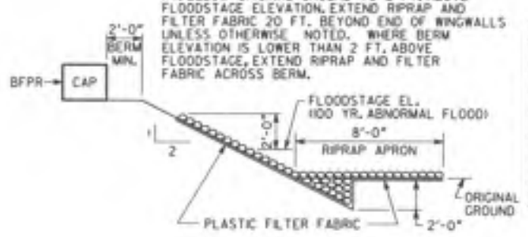

RIPRAP DETAIL
NO SCALE

THEORETICAL SCOUR DEPTHS (FT)						
	100 YEAR STORM			500 YEAR STORM		
BENT LOCATION	GENERAL	LOCAL	TOTAL	GENERAL	LOCAL	TOTAL
BENT 2	0.0	0.0	0.0	0.0	0.0	0.0
BENT 3	0.0	0.0	0.0	0.0	3.3	3.3
BENT 4	4.5	5.4	9.9	13.3	6.1	19.4
BENT 5	7.4	10.2	17.6	9.8	11.1	20.9
BENT 6	0.0	0.0	0.0	0.0	3.3	3.3

EXISTING RIGHT BRIDGE SERIAL NO. 057-0044-0
EXISTING RIGHT BRIDGE I.D. NO. 057-0041D-010.44N
PROJECT P.I. NO. 713640

BRIDGE NO. 42

REVISIONS							
NO.	DATE	DESCRIPTION	ORIG.	CHKR.	SUPV.	APPR.
A	6/30/09	Progress Drawings ISD 11 Revision 21	AEM	JDR	GLE	SAL
B	9/25/09	SOL SUBMISSION	AEM	JDR	GLE	SAL
C	11/30/09	PLOTTED PER GDOT'S TERMINATION FOR CONVENIENCE DIRECTION	AEM			

ABBAS EMANGEH PETERSEN — 11/20/09
DRAWN BY — DATE
CHECKED BY — DATE
SUPERVISOR — DATE
APPROVED — DATE

GTP Georgia Transportation Partners

NORTHWEST I-75/I-575 CORRIDOR

DEPARTMENT OF TRANSPORTATION
STATE OF GEORGIA

JBT J.B. Trimble, Inc.
2550 Heritage Ct, SE Suite 250
Atlanta GA 30339-3062
(770) 952-1022

BRIDGE SHEET 1 OF 7

I-75 / I-575 NORTHWEST CORRIDOR

I-575 REVERSIBLE OVER LITTLE RIVER

PLAN AND ELEVATION

CHEROKEE COUNTY NH000-0575-01(028)

DRAWING NO. 35-38

STATE	PROJECT NUMBER	SHEET NO.	TOTAL SHEETS
GA	NH000-0575-01(028)		

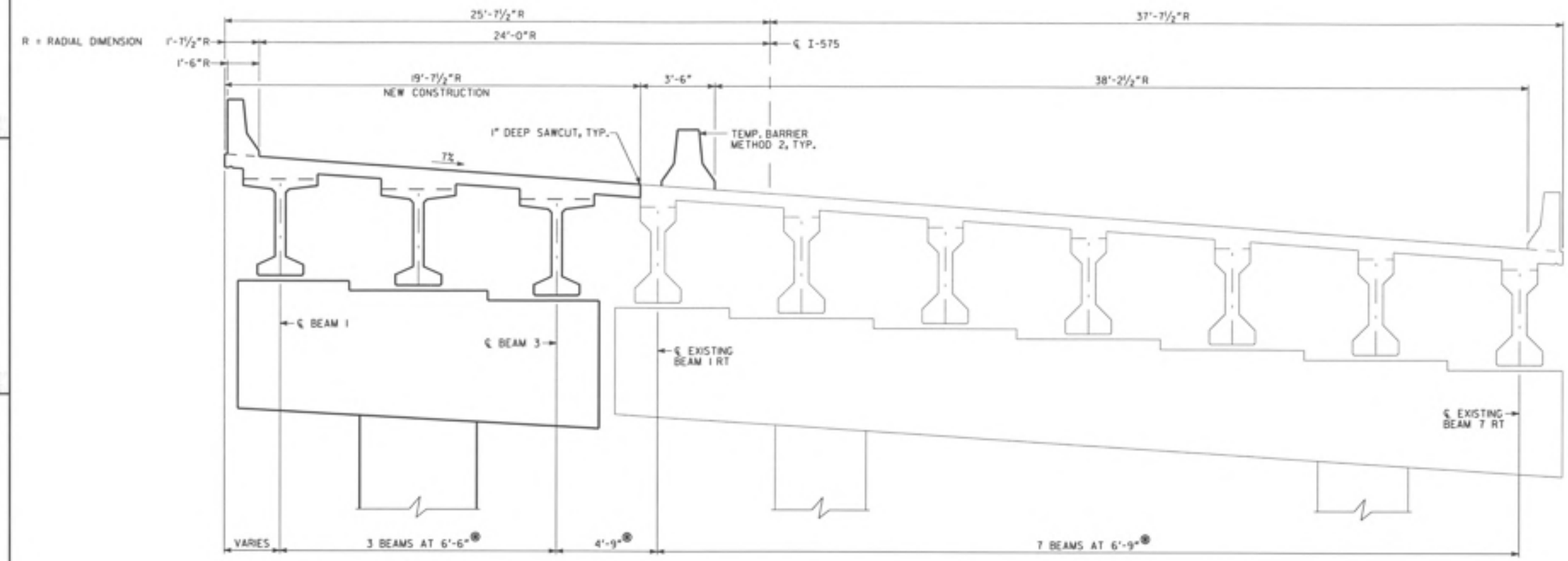

⊛ ALL BEAMS ARE CHORDS OF CONCENTRIC CIRCLES MEASURED BETWEEN ℄ BENTS OR BACK FACE PAVING REST.

TYPICAL SECTION
(LOOKING AHEAD, RIGHT BRIDGE)

CONSTRUCTION SEQUENCE

1. PLACE TEMPORARY BARRIER, MAINTAIN TWO 12'-0" LANES OF TRAFFIC ON EXISTING NORTHBOUND BRIDGE.
2. REMOVE PORTIONS OF EXISTING NORTHBOUND BRIDGE AS NECESSARY FOR NEW CONSTRUCTION.
3. CONSTRUCT NEW SUBSTRUCTURE.
4. CONSTRUCT NEW SUPERSTRUCTURE.

NOTE # IMPORTANT NOTICE: THIS DRAWING IS AN INCOMPLETE WORK-IN-PROGRESS AND ITS USE IS SUBJECT TO NOTE 1 ON DRAWING NO. 1-01.

BRIDGE NO. 42

ABBAS ESHAGEH-HEYBODI	11/20/09
DRAWN BY	DATE
CHECKED BY	DATE
SUPERVISOR	DATE
APPROVED	DATE

REVISIONS

NO	DATE	DESCRIPTION	DRIG	CHKR	SUPV	APPR
A	6/30/09	Progress Drawings (50 % Revision 2)	AEM	JCR	GLE	SJL
B	9/25/09	50% SUBMISSION	AEM	JCR	GLE	SJL
C	11/30/09	PLOTTED PER GDOT'S TERMINATION FOR CONVENIENCE DIRECTION	AEM			

GTP Georgia Transportation Partners

NORTHWEST I-75/I-575 CORRIDOR

DEPARTMENT OF TRANSPORTATION
STATE OF GEORGIA

JBT J.B. Trimble, Inc.
2550 Heritage Ct, SE Suite 250
Atlanta GA 30339-3062
(770) 952-1022

BRIDGE SHEET
2 OF 7

I-75 / I-575 NORTHWEST CORRIDOR

I-575 REVERSIBLE OVER LITTLE RIVER
CONSTRUCTION SEQUENCE

CHEROKEE COUNTY NH000-0575-01(028)

DRAWING NO. 35-39

STATE	PROJECT NUMBER	SHEET NO.	TOTAL SHEETS
GA	NH000-0575-01(028)		

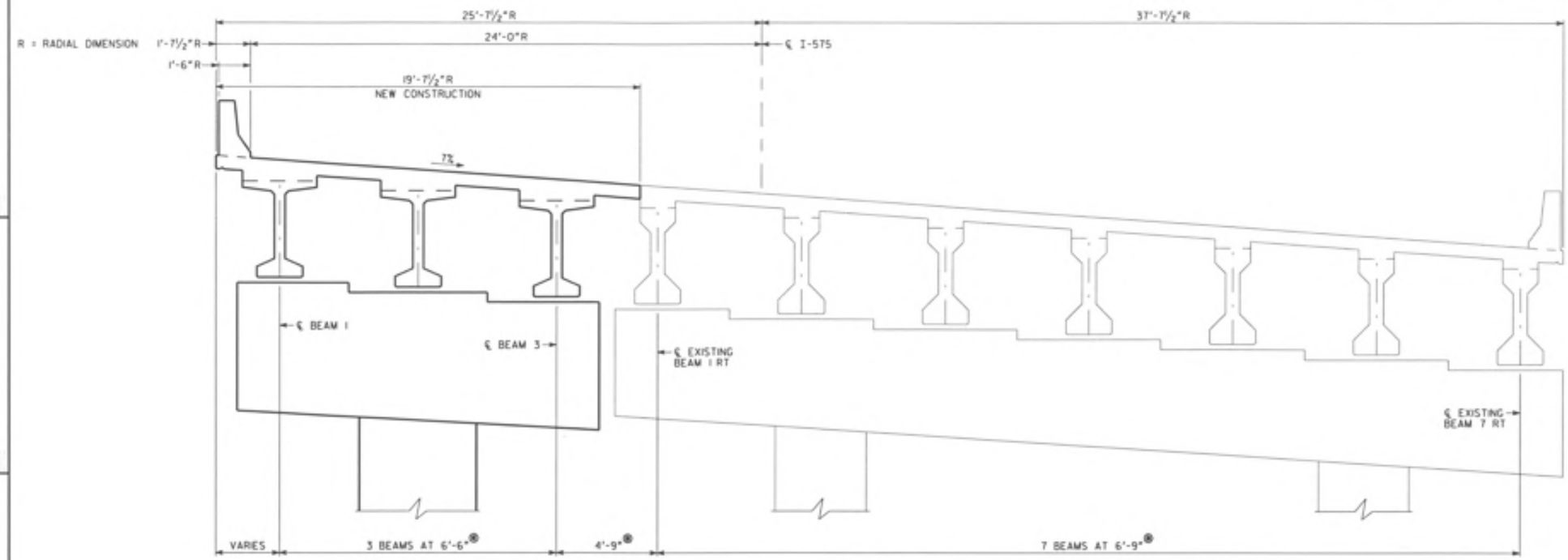

DECK SECTION
(LOOKING AHEAD, RIGHT BRIDGE)

SPAN	AVERAGE DECK WIDTH	BEAM TYPE	NUMBER OF BEAMS	BEAMS	SLAB THICKNESS	BEAMS SPACING	AVERAGE BEAM LENGTH	RELEASE CONCRETE STRENGTH (f'ci)	FINAL CONCRETE STRENGTH (f'c)	STRAND TYPE	TOTAL NUMBER OF STRANDS	NUMBER OF RAISED STRANDS	HEIGHT OF RAISED STRANDS
ALL SPANS	19'-7½"	BULB-TEE 54"	3	1-3	7⅞"	6'-6"	87'-8"	4,500 PSI	5,000 PSI	½" SPECIAL	28	4	1'-6½"

® ALL BEAMS ARE CHORDS OF CONCENTRIC CIRCLES MEASURED BETWEEN ℄ BENTS OR BACK FACE PAVING REST.

NOTES:

1. MAINTAIN 2" CLEARANCE ON ALL REINFORCEMENT UNLESS OTHERWISE NOTED.
2. CARE SHALL BE EXERCISED IN REMOVAL OF EXISTING CONCRETE AND RETAIN EXISTING REINFORCEMENT. EXISTING REINFORCEMENT BARS TO BE SPLICED A MINIMUM OF 2'-6". ANY EXISTING REINFORCEMENT STEEL DAMAGED DURING REMOVAL SHALL BE REPLACED BY THE CONTRACTOR AT NO ADDITIONAL COST.
3. NON-CONTACT LAPS MAY BE USED BETWEEN EXISTING AND NEW TRANSVERSE DECK BARS.

NOTE ® IMPORTANT NOTICE: THIS DRAWING IS AN INCOMPLETE WORK-IN-PROGRESS AND ITS USE IS SUBJECT TO NOTE 1 ON DRAWING NO. 1-01.

BRIDGE NO. 42

ABBAS ESNAGEH-MEYBODI	11/20/09	
DRAWN BY	DATE	
CHECKED BY	DATE	
SUPERVISOR	DATE	
APPROVED	DATE	

REVISIONS

NO	DATE	DESCRIPTION	ORIG	CHKR	SUPV	APPR
A	6/30/09	Progress Drawings (50 % Revision 2)	AEM	JCR	GLE	SJL
B	9/25/09	50% SUBMISSION	AEM	JCR	GLE	SJL
C	11/30/09	PLOTTED PER GDOT'S TERMINATION FOR CONVENIENCE DIRECTION	AEM			

GTP Georgia Transportation Partners

NORTHWEST I-75/I-575 CORRIDOR

DEPARTMENT OF TRANSPORTATION
STATE OF GEORGIA

JBT J.B. Trimble, Inc.
2550 Heritage Ct, SE Suite 250
Atlanta GA 30339-3062
(770) 952-1022

BRIDGE SHEET 3 OF 7

I-75 / I-575 NORTHWEST CORRIDOR

I-575 REVERSIBLE OVER LITTLE RIVER

DECK SECTION

CHEROKEE COUNTY NH000-0575-01(028)

DRAWING NO. 35-40

n:\ga\205717\drawings\struct\BR42\Preliminary\Utility\Layer_05.dgn 12/1/2009 10:28:26 PM

STATE	PROJECT NUMBER	SHEET NO.	TOTAL SHEETS
GA	NH000-0575-01(028)		

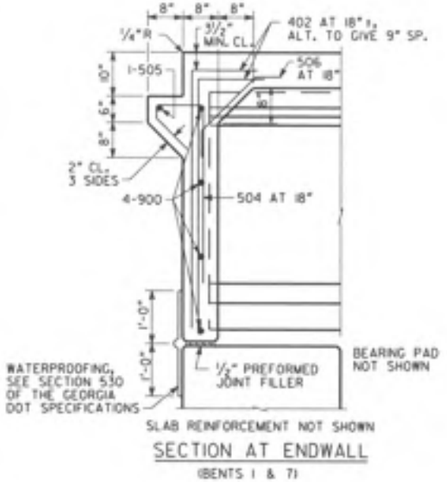

SECTION AT ENDWALL

(BENTS 1 & 7)

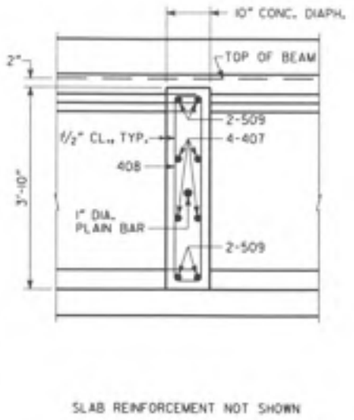

SLAB REINFORCEMENT NOT SHOWN

SECTION THRU DIAPHRAGM

(ALL SPANS)

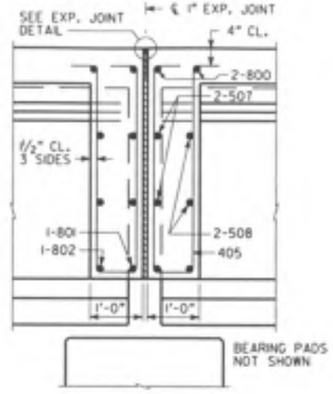

SLAB REINFORCEMENT NOT SHOWN

SECTION THRU EDGE BEAM

(BENTS 2 THRU 6)

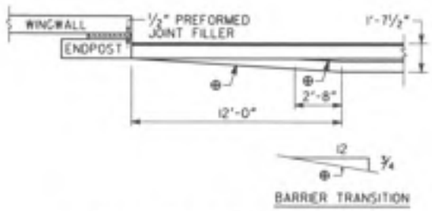

BARRIER TRANSITION DETAIL

JOINT OPENING		
TEMPERATURE (°F)	BTS. 2-5 W (IN.)	BENT 6 W (IN.)
30	0.94	1.13
60	0.75	0.75
90	0.56	0.37

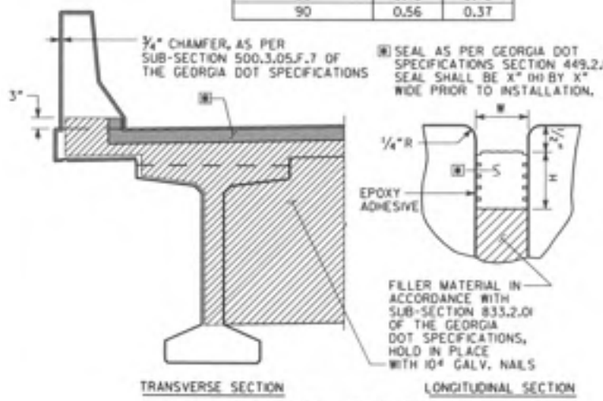

EXPANSION JOINT DETAILS

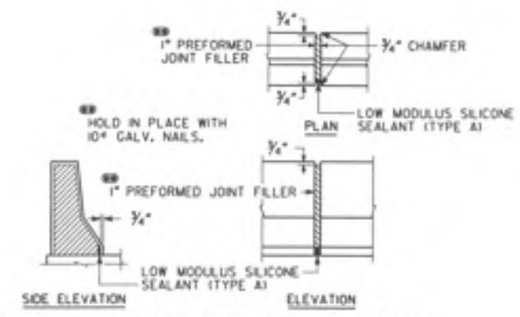

DETAILS OF 1" EXPANSION JOINT IN BARRIER

* TAPERS TO 0" AT END POST.

** AT CONTRACTOR'S OPTION, REPLACE 10" RADIUS WITH STRAIGHT INTERSECTING SLOPES.

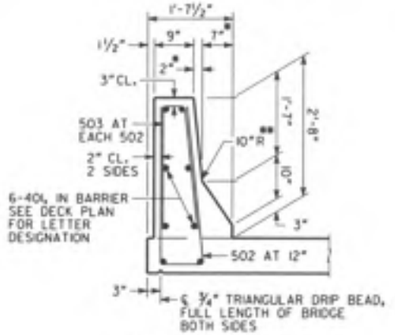

BARRIER DETAIL

NOTE ⊕ IMPORTANT NOTICE! THIS DRAWING IS AN INCOMPLETE WORK-IN-PROGRESS AND ITS USE IS SUBJECT TO NOTE 1 ON DRAWING NO. 1-01.

BRIDGE NO. 42

ABBAS ESHAGHI-HEYDARI	10/20/09	
Drawn BY	DATE	
CHECKED BY	DATE	
SUPERVISOR	DATE	
APPROVED	DATE	

REVISIONS

NO	DATE	DESCRIPTION	ORIG	CHKR	SUPV	APPR
A	6/30/09	Progress Drawings (50 % Revision 2)	AEM	JCR	GLE	SJL
B	9/25/09	50% SUBMISSION	AEM	JCR	GLE	SJL
C	11/30/09	PLOTTED PER GDOT'S TERMINATION FOR CONVENIENCE DIRECTION	AEM			

GTP Georgia Transportation Partners

NORTHWEST I-75/I-575 CORRIDOR

DEPARTMENT OF TRANSPORTATION
STATE OF GEORGIA

JBT J.B. Trimble, Inc.
2550 Heritage Ct, SE Suite 250
Atlanta GA 30339-3062
(770) 952-1022

BRIDGE SHEET 4 OF 7

I-75 / I-575 NORTHWEST CORRIDOR

I-575 REVERSIBLE OVER LITTLE RIVER

MISCELLANEOUS DETAILS

CHEROKEE COUNTY NH000-0575-01(028)

DRAWING NO. 35-41

STATE	PROJECT NUMBER	SHEET NO.	TOTAL SHEETS
GA	NH000-0575-01(028)		

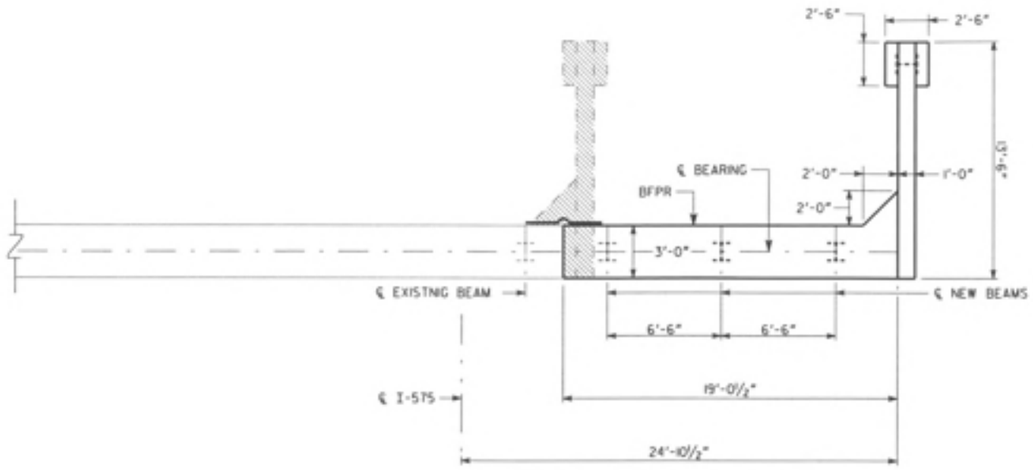

PLAN

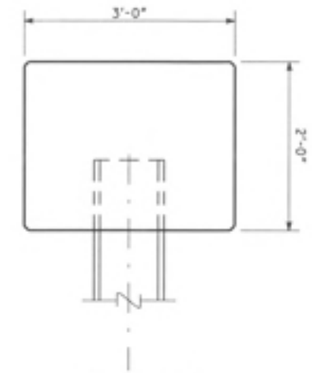

SECTION A-A
NO SCALE

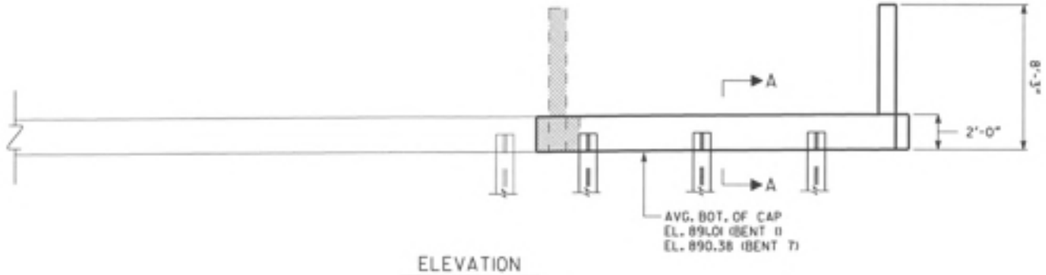

ELEVATION
BENT 1 LOOKING BACK
(BENT 7 SIMILAR)

NOTE:
1. MAINTAIN 2" CL. ON ALL REINFORCEMENT UNLESS OTHERWISE NOTED.

PLAN DRIVING OBJECTIVE

ALL PILES SHALL BE DRIVEN TO A DRIVING RESISTANCE OF 75 TONS AFTER AN ESTIMATED TIP ELEVATION SHOWN BELOW IS ACHIEVED

BENT	EST. TIP
1	800
7	857

ALL PILES SHALL BE STEEL H, HP 14 X 73

NOTE # IMPORTANT NOTICE: THIS DRAWING IS AN INCOMPLETE WORK-IN-PROGRESS AND ITS USE IS SUBJECT TO NOTE 1 ON DRAWING NO. 1-01.

BRIDGE NO. 42

ABBAS ESHAGIEH-HEYBODI	11/20/09
DRAWN BY	DATE
CHECKED BY	DATE
SUPERVISOR	DATE
APPROVED	DATE

REVISIONS

NO	DATE	DESCRIPTION	ORIG	CHKR	SUPV	APPR
A	6/30/09	Progress Drawings (50 % Revision 2)	AEM	JCR	GLE	SJL
B	9/25/09	50% SUBMISSION	AEM	JCR	GLE	SJL
C	11/30/09	PLOTTED PER GDOT'S TERMINATION FOR CONVENIENCE DIRECTION	AEM			

GTP Georgia Transportation Partners

NORTHWEST I-75/I-575 CORRIDOR

DEPARTMENT OF TRANSPORTATION
STATE OF GEORGIA

JBT J.B. Trimble, Inc.
2550 Heritage Ct, SE Suite 250
Atlanta GA 30339-3062
(770) 952-1022

BRIDGE SHEET
5 OF 7

I-75 / I-575 NORTHWEST CORRIDOR

I-575 REVERSIBLE OVER LITTLE RIVER
END BENTS

CHEROKEE COUNTY NH000-0575-01(028)

DRAWING NO. 35-42

STATE	PROJECT NUMBER	SHEET NO.	TOTAL SHEETS
GA	NH000-0575-01(028)		

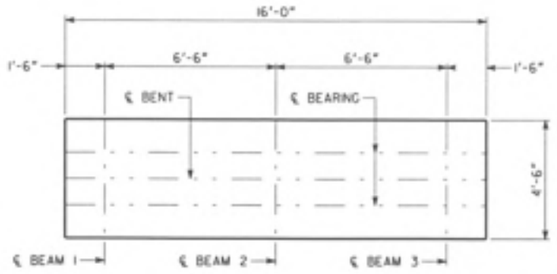

PLAN

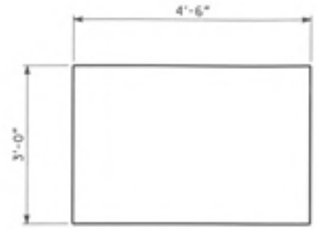

SECTION A-A

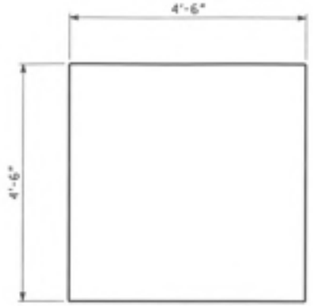

SECTION B-B

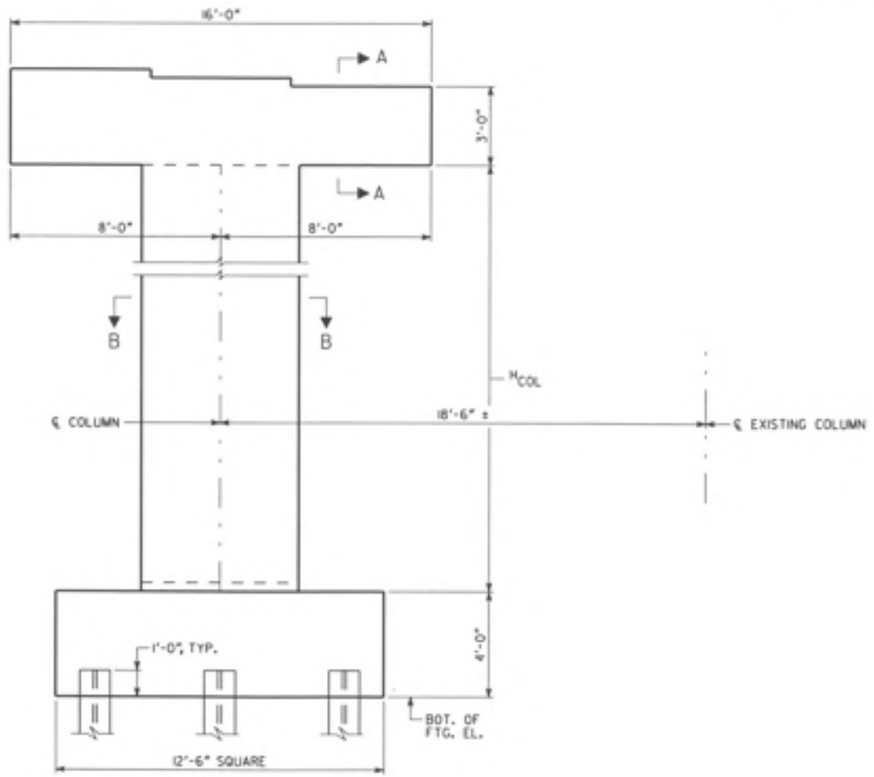

ELEVATION

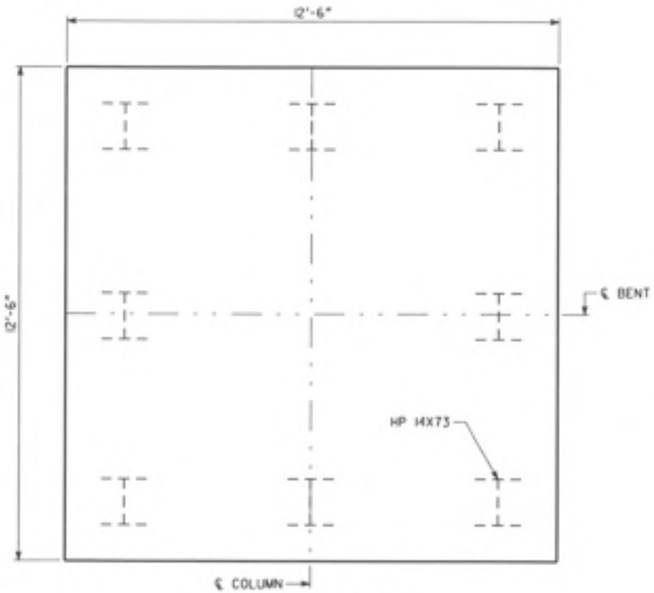

FOOTING LAYOUT

TABLE OF DIMENSIONS		
BENT	H_{COL}	BOT. OF FTG. EL.
2	29'-6"	856
3	37'-6"	847

NOTE:

1. MAINTAIN 2"CL. ON ALL REINFORCEMENT UNLESS OTHERWISE NOTED.

PLAN DRIVING OBJECTIVE

ALL PILES SHALL BE DRIVEN TO A DRIVING RESISTANCE OF 96 TONS AFTER AN ESTIMATED TIP ELEVATION SHOWN BELOW IS ACHIEVED

BENT	EST. TIP
2	800
3	815

ALL PILES SHALL BE STEEL H, HP 14 X 73

NOTE II IMPORTANT NOTICE: THIS DRAWING IS AN INCOMPLETE WORK-IN-PROGRESS AND ITS USE IS SUBJECT TO NOTE I ON DRAWING NO. 1-01.

BRIDGE NO. 42

REVISIONS							
NO	DATE	DESCRIPTION	DRIG	CHKR	SUPV	APPR
A	6/30/09	Progress Drawings (50 % Revision 2)	AEM	JCR	GLE	SJL
B	9/25/09	50% SUBMISSION	AEM	JCR	GLE	SJL
C	11/30/09	PLOTTED PER GDOT'S TERMINATION FOR CONVENIENCE DIRECTION	AEM			

ARMIS ENGINEERING — 11/20/09
DRAWN BY — DATE
CHECKED BY — DATE
SUPERVISOR — DATE
APPROVED — DATE

GTP Georgia Transportation Partners

NORTHWEST I-75/I-575 CORRIDOR

DEPARTMENT OF TRANSPORTATION
STATE OF GEORGIA

JBT J.B. Trimble, Inc.
2550 Heritage Ct, SE Suite 250
Atlanta GA 30339-3062
(770) 952-1022

BRIDGE SHEET 6 OF 7

I-75 / I-575 NORTHWEST CORRIDOR

I-575 REVERSIBLE OVER LITTLE RIVER
INTERMEDIATE BENTS 2 & 3

CHEROKEE COUNTY — NH000-0575-01(028) — DRAWING NO. 35-43

12/1/2009
M:\0\a\2557\Submittals\Bridges\Preliminary\Little River BTI.dgn
10:21 PM

STATE	PROJECT NUMBER	SHEET NO.	TOTAL SHEETS
GA	NH000-0575-01(028)		

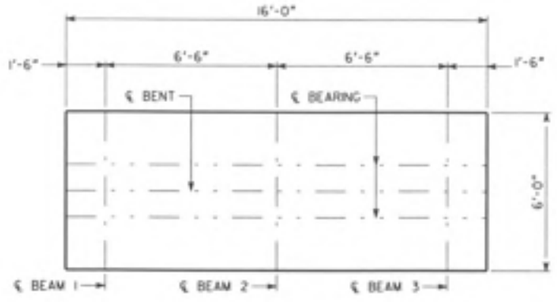

PLAN

SECTION A-A

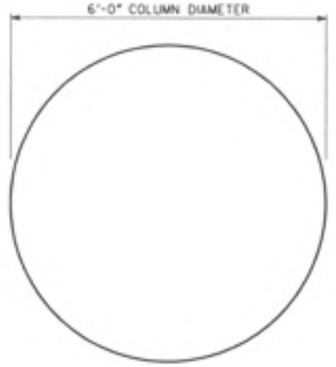

SECTION B-B

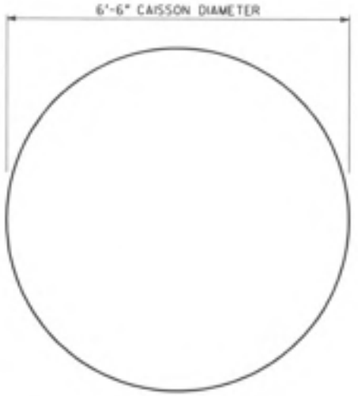

SECTION C-C

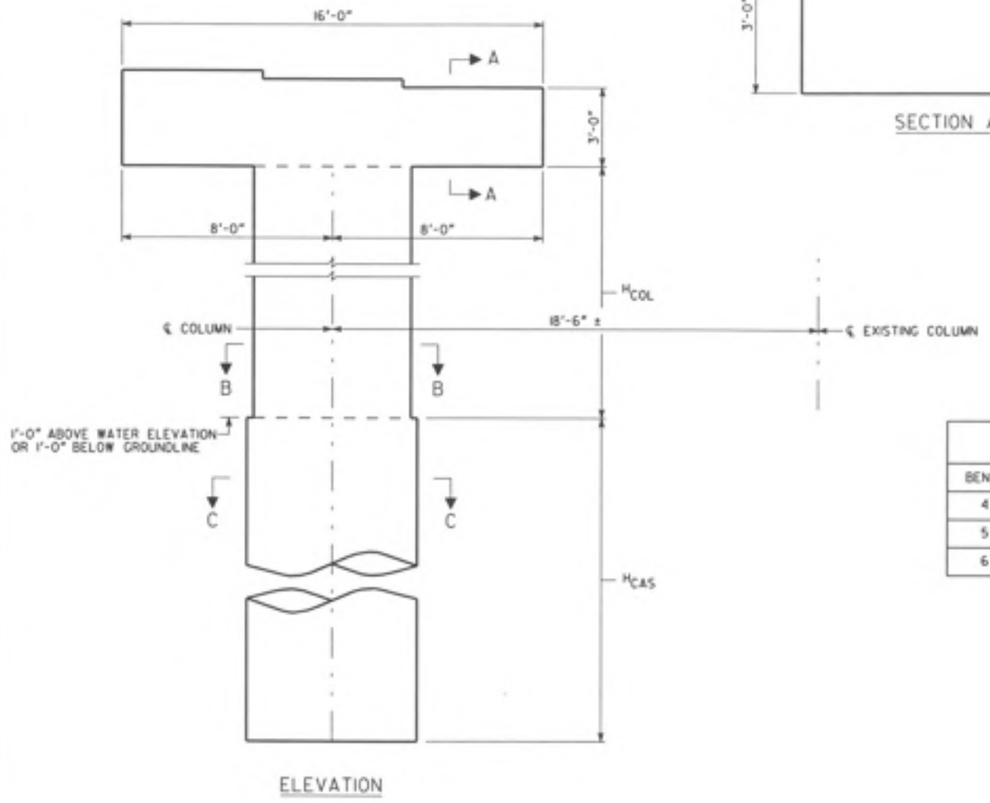

ELEVATION

TABLE OF DIMENSIONS			
BENT	H_{COL}	H_{CAS}	BOT. OF CAISS. EL.
4	43'-3"	38'-0"	807
5	43'-3"	36'-0"	809
6	37'-3"	24'-6"	827

CAISSON NOTES:

1. CONCRETE FOR DRILLED CAISSONS SHALL BE CLASS AA (f'_c = 3500 PSI).
2. DRILLED CAISSONS ARE DESIGNED FOR AN ALLOWABLE BEARING PRESSURE OF 100 KSF ON SOUND ROCK.
3. DRILLED CAISSONS SHALL EXTEND A MINIMUM DEPTH OF 15'-0" INTO SOUND ROCK AT BENTS 4, 5 & 6.
4. PERMANENT CASINGS SHALL BE REQUIRED TO CONSTRUCT DRILLED CAISSONS.
5. CUT OFF PERMANENT CASING AT GROUND LINE OR WATER SURFACE WHICHEVER IS HIGHER.
6. MINIMUM LAP SPLICE FOR #11 CAISSON REINFORCEMENT SHALL BE 9'-0". COST OF REINFORCEMENT REQUIRED FOR A LAP SPLICE SHALL BE INCLUDED IN THE PRICE BID FOR LF DRILLED CAISSON.
7. LIMIT OF PAYMENT FOR CAISSON SHALL BE THE TOP OF CAISSON.
8. SPIRALS SHALL BE TWO (2) CLOSED TURNS AT THE TOP AND BOTTOM OF CAISSONS. SPIRAL SPLICES SHALL BE ACCOMPLISHED BY LAPPING AND WELDING 1.5 TURNS. AT THE CONTRACTOR'S OPTION, #4 HOOP STIRRUPS WITH 2'-0" LAP AT 6" SPACING MAY BE SUBSTITUTED FOR SPIRAL IN CAISSON AT NO ADDITIONAL COST TO THE DEPARTMENT.
9. THE BOTTOM OF DRILLED SHAFTS MUST BE INSPECTED BY THE PROJECT GEOTECHNICAL ENGINEER.

NOTE:

1. MAINTAIN 2" CL. ON ALL REINFORCEMENT UNLESS OTHERWISE NOTED.

NOTE ⊠ IMPORTANT NOTICE: THIS DRAWING IS AN INCOMPLETE WORK-IN-PROGRESS AND ITS USE IS SUBJECT TO NOTE 1 ON DRAWING NO. 1-01.

BRIDGE NO. 42

ABBAS ESHAGHI-HEYDARI	11/20/09	
DRAWN BY	DATE	
CHECKED BY	DATE	
SUPERVISOR	DATE	
APPROVED	DATE	

REVISIONS						
NO	DATE	DESCRIPTION	DRIG	CHKR	SUPV	APPR
A	6/30/09	Progress Drawings (50 % Revision 2)	AEM	JCR	GLE	SJL
B	9/25/09	SDI SUBMISSION	AEM	JCR	GLE	SJL
C	11/30/09	PLOTTED PER GDOT'S TERMination FOR CONVENIENCE DIRECTION	AEM			

GTP Georgia Transportation Partners

NORTHWEST I-75/I-575 CORRIDOR

DEPARTMENT OF TRANSPORTATION
STATE OF GEORGIA

JBT J.B. Trimble, Inc.
2550 Heritage Ct, SE Suite 250
Atlanta GA 30339-3062
(770) 952-1022

BRIDGE SHEET
7 OF 7

I-75 / I-575 NORTHWEST CORRIDOR

I-575 REVERSIBLE OVER LITTLE RIVER
INTERMEDIATE BENTS 4, 5 & 6

CHEROKEE COUNTY NH000-0575-01(028)

DRAWING NO.
35-44

12/1/2009
M:\trans\2551\Drawings\struct\BR42\Preliminary\L1151pRiver_BT2.dgn
16205 PM