GEORGIA DEPARTMENT OF TRANSPORTATION

GDOT Project No: NH000-0073-03(242)

PI No: 714130

JBT Project No. 255717

Bridge No. 32
I-75 REVERSIBLE OVER BIG SHANTY CONN

November, 2009

COBB COUNTY

DESIGN CALCULATIONS

Note 1: Georgia Department of Transportation (GDOT) terminated Contract Number TOURDPPI60072 for its convenience prior to the completion of all work under that contract and directed that the work with respect to these calculations be discontinued.

(a) These calculations were not completed at the time of GDOT's direction and the information contained herein is not complete and/or has not been fully verified or checked. These calculations are a work-in-progress and are presented only as such.

(b) Any user is cautioned that the use of these calculations and any related information or calculations, without access to pertinent factors and without proper regard for their purpose, could lead to erroneous conclusions.

(c) If any such calculations or any information contained herein is used in future work efforts or any follow on design work activity, a complete confirmation of the information contained herein should be performed prior to any such use.

(d) GTP has no responsibility for the use of this information not under its direct control.

Prepared for Georgia Transportation Partners
Atlanta, Georgia

J.B. TRIMBLE, INC.
2550 Heritage Ct, SE. Suite 250
Atlanta, GA 30339-3062
(770) 952-1022

Purpose of Calculation

Bridge design calculations for Bridge #32 were made for costing purposes.

1. Specifications and References

AASHTO 17th Edition, 2002
GDOT Bridge Design Manual, 2008

2. Computer

Computer Type Used: PC
Operating System: Windows XP, Pentium 4, 2GB RAM (min.)

3. Computer Programs (Standard Computer Program)

Excel, Microsoft Office 2003 – JBT Calculation Spreadsheets
BRPSBM1, 2008 – PSC Beam Design and Analysis, by GDOT

CALCULATION COVER SHEET

PROJECT	JOB NO.	CALC NO.	SHEET
I-75 / I-575 NORTHWEST CORRIDOR	NH000-0073-03(242)	BR#32	1
SUBJECT	DISCIPLINE		
Slab Design	STRUCTURAL		

CALCULATION STATUS DESIGNATION	PRELIMINARY	CONFIRMED	SUPSEDED	VOIDED	INCOMPLETE
	☐	☐	☐	☐	X

COMPUTER PROGRAM/TYPE	SCP	MAINFRAME	PC	PROGRAM	VERSION/RELEASE NO.
	(X) YES ( ) NO	( )	(X)	Excel	2003

Note 1: Georgia Department of Transportation (GDOT) terminated Contract Number TOURDPPI60072 for its convenience prior the completion of all work under that contract and directed that the work with respect to these calculations be discontinued.
(a) These calculations were not completed at the time of GDOT's direction and the information contained herein is not complete and/or has not been fully verified or checked. These calculations are a work-in-progress and are presented only as such.
(b) Any user is cautioned that the use of these calculations and any related information or calculations, without access to factors and without proper regard for their purpose, could lead to erroneous conclusions.
(c) If any such calculations or any information contained herein is used in future work efforts or any follow on design work activity, a complete confirmation of the information contained herein should be performed prior to any such use.
(d) GTP has no responsibility for the use of this information not under its direct control.

Slab Design calculations are included for spans 1, 2 and 3.

NO.	REASON FOR REVISION	TOTAL NO. OF SHEETS	LAST SHEET NO.	BY	CHECKED	APPROVED/ ACCEPTED	DATE
A	As per GDOT's termination for convenience direction	8	8	JCR			11/30/09

RECORD OF REVISIONS

CALCULATION SHEET

PROJECT: I-75 / I-575 NORTHWEST CORRIDOR
JOB NUMBER NH000-0073-03(242)
CALC NO. BR#32

SUBJECT: Slab Design
BY: JCR DATE: 11/30/2009

SHEET NO.
SHEET REV.

Sufficient sample calculations representative of the scope and conditions in the design calculation were performed and the results compared to demonstrate the computer program adequacy.

BRIDGE: I-75 over Big Shanty Connector
COUNTY: COBB
P.I. NO: 0
PROJECT: NH000-0073-03(242)

Hatch Mott MacDonald

JOB NO: 255717
DESIGNED BY: WBN
CHECKED BY: JCR

✓ JCR 10-15-09

ALL SPANS

PRELIMINARY INFORMATION

Georgia County	North of Fall Line?	ADT?	Standard Loading	BARRIER TYPE	FENCING OPTION
Cobb	Y	>= 2000	HS-20	Jersey Barrier	None

INTERIOR BEAM TYPE: NA-T (TB, PSC, BULB-T) ✓

FASCIA BEAM TYPE: NA-T (TB, PSC, BULB-T) ✓

INTERIOR BEAM TOP FLANGE WIDTH =	42 in.	✓
FASCIA BEAM TOP FLANGE WIDTH =	42 in.	
INTERMEDIATE SLAB THICKNESS =	8.000 in.	✓
OVERHANG SLAB THICKNESS =	8.000 in.	✓
GIRDER SPACING =	8.500 ft.	✓
NUMBER OF GIRDERS =	3	✓
OVERHANG WIDTH =	3.875 ft.	✓
CONCRETE STRENGTH, f'c =	3500 psi.	✓
STEEL STRENGTH, fy =	60000 psi.	✓
RAILING HEIGHT (H) =	2.667 ft.	✓
RAILING WIDTH (W) =	0.750 ft.	
OUTER DECK LIP =	1.500 in.	
INSIDE FACE OF RAILING TO EDGE OF DECK =	1.625 ft.	✓
C.G. FROM OUTSIDE =	7.95 in.	
TOP BAR CLEARANCE =	2.750 in.	✓
BOTTOM BAR CLEARANCE =	1.000 in.	✓
GROOVED DEPTH =	0.250 in.	✓
DESIGN SPEED =	65.00 mph	✓ (IF CENTRIFUGAL CONSIDERED)
RADIUS =	0.000 ft.	(IF CENTRIFUGAL CONSIDERED)
WHEEL LOAD =	16 kips	✓
IMPACT FACTOR =	1.30	✓
FUTURE WEARING SURFACE =	30.00 psf	✓
RAILING LOAD =	10.00 klf	✓ AT TOP OF PARAPET
ADDITIONAL LOAD @ OVERHANG =	0.000 klf	
DIST. FROM EDGE OF DECK TO LOAD =	0.625 ft.	

DECK SLOPE = 2 %

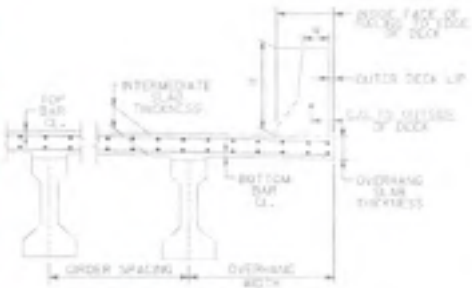

JERSEY BARRIER DETAILS

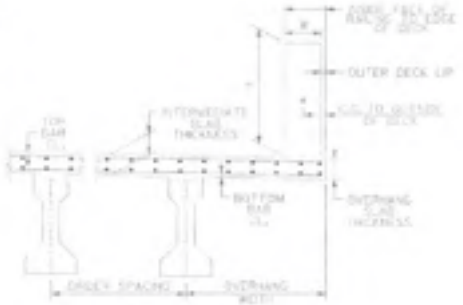

PARAPET DETAILS

INTERMEDIATE SLAB DESIGN

EFFECTIVE SPAN LENGTH = 6.750 ft. ✓ *AASHTO 3.24.1.2*

DEAD LOAD

SLAB D.L. = 0.100 kips / ft. / lf.
ADDITIONAL D.L. = 0.030 kips / ft. / lf.

TOTAL D.L.= 0.130 kips / ft. / lf.

DEAD LOAD MOMENT = 1.3 * (WT DL) * (SPAN)^2 / 10 = 0.770 kip-ft. / lf.

LIVE LOAD

WHEEL LOAD = 16.00 kips

CONT. FACTOR = 0.80
IMPACT = 1.30

LIVE LOAD MOMENT = 2.17 * ((S + 2)/32) * P(LL+I) * 0.8 = 9.874 kip-ft. / lf. *AASHTO 3.24.3.1*

CENTRIFUGAL LOAD *AASHTO 3.10.1*

C = 6.68 * S^2/ R = 0.000 FRACTION OF LIVE LOAD

CENTRIFUGAL FORCE MOMENT = 1.3 * ((S + 2)/32) * P (LL+ I) * 0.8 * C = 0.000 kip-ft. / lf. *AASHTO TABLE 3.22.1A*

TOTAL DESIGN MOMENT (M_u) = 10.644 kip-ft. / lf. = 127.72 k-in. / lf.

FLEXURE STRENGTH *AASHTO 8.16.3.2*

$\varnothing M_n > M_u$ $\varnothing$ = 0.90

$\varnothing M_n = \varnothing * [As * fy * (d - a/2)]$ where $a = As * fy / (0.85 * f'c * b)$

a = 1.681 As

d_{top} = 4.938 in. USE: 5 BAR As = 0.31 in.^2 / lf.

d_{bot} = 6.438 in. USE: 5 BAR As = 0.31 in.^2 / lf.

TOP STEEL

266.625 As = 45.38 As*2 = 127.72 k-in. / lf. ✓ ✓

TOP BAR = NO.	5	SPACED AT	6.250 in.	As =	0.60 in.^2 / lf.

$\varnothing M_n$ = 142.62 k-in. / lf.	>	M_u = 127.72 k-in. / lf.	OK

BOTTOM STEEL

347.625 As = 45.38 As*2 = 127.72 k-in. / lf. ✓ ✓

BOT BAR = NO.	5	SPACED AT	6.250 in.	As =	0.60 in.^2 / lf.

$\varnothing M_n$ = 190.83 k-in. / lf.	>	M_u = 127.72 k-in. / lf.	OK

BRIDGE: I-75 over Big Shanty Connector
COUNTY: COBB
P.I. NO: 0
PROJECT: NH000-0073-03(242)

Hatch Mott MacDonald

JOB NO: 255717
DESIGNED BY: WBN
CHECKED BY: JCR

OVERHANG SLAB DESIGN

EFFECTIVE SPAN LENGTH = 3.000 ft. ADD. LOAD MOM. ARM @ FLANGE = N/A *AASHTO 3.24.5.1*
ADD. LOAD MOM. ARM @ BARRIER = N/A

DEAD LOAD

BARRIER WEIGHT = 0.405 klf
FENCING WEIGHT = 0.000 klf

SLAB D.L. = 0.100 kips / ft. / lf.
ADDITIONAL D.L. = 0.030 kips / ft. / lf.
PARAPET D.L.= 0.405 kips / ft. / lf.

DL MOMENT @ FLANGE:

SLAB MOM = 0.450 kip-ft. / lf.
ADD'L MOM = 0.028 kip-ft. / lf.
PARAPET MOM = 0.947 kip-ft. / lf.
ADD. LOAD MOM = N/A

TOTAL MOM = 1.425 kip-ft. / lf. KIP-FT/LF

DL MOMENT @ EDGE OF BARRIER:

SLAB MOM = 0.132 kip-ft. / lf.
ADD'L MOM = 0.008 kip-ft. / lf.
PARAPET MOM = 0.380 kip-ft. / lf.
ADD. LOAD MOM = N/A

TOTAL MOM = 0.522 kip-ft. / lf.

DEAD LOAD MOMENT @ FLANGE= 1.3 * TOTAL MOMENT = 1.853 kip-ft. / lf.
D.L. MOMENT @ EDGE OF BARRIER= 1.3 * TOTAL MOMENT = 0.679 kip-ft. / lf.

LIVE LOAD

WHEEL LOAD 16 kips

IMPACT = 1.30
MOM ARM (X)= 1.25 ft.
E = 0.8 * X + 3.75 = 4.75 ft.

LIVE LOAD MOMENT = 2.17 * (P(LL + I) / E) * X = 11.878 kip-ft. / lf. *AASHTO 3.24.5.1.1*

CENTRIFUGAL LOAD

C = 6.68 * S^2/ R = 0.000 FRACTION OF LIVE LOAD

CENTRIFUGAL FORCE MOMENT = 1.3 * (P(LL + I) / E) * X * C = 0.000 kip-ft. / lf.

RAILING LOAD *AASHTO 3.24.5.2*

RAILING LOAD = 10.00 kips

RAILING LOAD @ FLANGE:

MOM ARM (H) = 3.11 ft.
DISTANCE (X) = 2.34 ft.
E = 0.8 * X + 5.00 = 6.87 ft.

RAILING LOAD @ EDGE OF BARRIER:

MOM ARM (H) = 3.11 ft.
DISTANCE (X) = 0.96 ft.
E = 0.8 * X + 5.00 = 5.77 ft.

RAIL MOM @ FLANGE= 2.17 * (P_{rail}/ E) * H = 9.828 kip-ft. / lf.

RAIL MOM @ EDGE OF BARRIER= 2.17 * (P_{rail}/ E) * H = 11.702 kip-ft. / lf.

SUMMARY OF MOMENTS:

DL + LL @ FLANGE = 13.731 kip-ft. / lf.
DL + RAIL @ FLANGE = 11.682 kip-ft. / lf.
DL + RAIL @ BARRIER = 12.381 kip-ft. / lf.

TOTAL DESIGN MOMENT (M_u) = 13.731 KIP-FT / LF = 164.77 k-in / lf.

FLEXURE STRENGTH

AASHTO 8.16.3.2

$\varnothing M_n > M_u$ $\varnothing$ = 0.90

$\varnothing M_n = \varnothing * [A_s * f_y * (d - a/2)]$ where $a = A_s * f_y / [0.85 * f'_c * b]$

a = 1.681 As
d_{top} = 4.938 in. USE 5 BAR As = 0.31 in.^2 / lf.
PROVIDE ADDITIONAL OVERHANG STEEL = 4 BAR As = 0.20 in.^2 / lf.

TOP STEEL

266.625 As - 45.38 As*2 = 164.77 k-in. / lf.

TOP BAR = NO. ✓ 5 SPACED AT ✓ 6.25 in. As = 0.60 in.^2 / lf.

$\varnothing M_n$ = 142.62 k-in. / lf. < M_u = 164.77 k-in. / lf. ADD. REINF. NEEDED!!

ADD'L BAR = NO. ✓ 4 SPACED AT ✓ 12.50 in. As = 0.19 in.^2 / lf.

$\varnothing M_n$ = 181.77 k-in. / lf. ≥ M_u = 164.77 k-in. / lf. OK

SERVICE LOAD DESIGN OF BRIDGE SLAB

Georgia Department of Transportation 13-MAY-04
Office of Bridge and Structural Design 07:49:26
October 2003

WHEEL LOAD (Kips)	fc (ksi)	fs (ksi)	n	SLAB COVER (in)	FUTURE PAVING (kips/ft^2)	CONTINUITY FACTOR
16.00	1.400	24.000	9	2.750	0.030	0.8

EFFECTIVE SPAN LENGTH (ft-in)	SLAB THICKNESS MINIMUM (in)	SLAB THICKNESS ACTUAL (in)	SIZE AND SPACING OF MAIN REINFORCEMENT (in)	DISTRUBUTION REINFORCEMENT MIDDLE HALF	DISTRUBUTION REINFORCEMENT OUTER QUARTERS
6 - 6	7.8889	8.000	# 5 at 6.500	7 -# 4	4 -# 4
6 - 7	7.9167	8.000	# 5 at 6.375	7 -# 4	4 -# 4
6 - 8	7.9445	8.000	# 5 at 6.375	7 -# 4	4 -# 4
6 - 9	7.9722	8.000	# 5 at 6.250	7 -# 4	4 -# 4
6 - 10	7.9998	8.000	# 5 at 6.250	7 -# 4	4 -# 4
6 - 11	8.0309	8.125	# 5 at 6.250	7 -# 4	4 -# 4
7 - 0	8.0585	8.125	# 5 at 6.250	7 -# 4	4 -# 4
7 - 1	8.0860	8.125	# 5 at 6.125	8 -# 4	4 -# 4
7 - 2	8.1134	8.125	# 5 at 6.125	8 -# 4	4 -# 4
7 - 3	8.1446	8.250	# 5 at 6.125	8 -# 4	4 -# 4
7 - 4	8.1719	8.250	# 5 at 6.125	8 -# 4	4 -# 4
7 - 5	8.1992	8.250	# 5 at 6.000	8 -# 4	4 -# 4
7 - 6	8.2265	8.250	# 5 at 6.000	8 -# 4	4 -# 4
7 - 7	8.2577	8.375	# 5 at 6.000	8 -# 4	4 -# 4
7 - 8	8.2849	8.375	# 5 at 6.000	8 -# 4	4 -# 4
7 - 9	8.3121	8.375	# 5 at 5.875	9 -# 4	6 -# 4
7 - 10	8.3392	8.375	# 5 at 5.875	9 -# 4	6 -# 4
7 - 11	8.3662	8.375	# 5 at 5.750	9 -# 4	6 -# 4
8 - 0	8.3976	8.500	# 5 at 5.875	9 -# 4	6 -# 4
8 - 1	8.4246	8.500	# 5 at 5.750	9 -# 4	6 -# 4
8 - 2	8.4515	8.500	# 5 at 5.750	9 -# 4	6 -# 4
8 - 3	8.4784	8.500	# 5 at 5.625	9 -# 4	6 -# 4
8 - 4	8.5099	8.625	# 5 at 5.750	9 -# 4	6 -# 4
8 - 5	8.5367	8.625	# 5 at 5.625	10 -# 4	6 -# 4
8 - 6	8.5636	8.625	# 5 at 5.625	10 -# 4	6 -# 4
8 - 7	8.5903	8.625	# 5 at 5.500	10 -# 4	6 -# 4
8 - 8	8.6170	8.625	# 5 at 5.500	10 -# 4	6 -# 4
8 - 9	8.6487	8.750	# 5 at 5.625	10 -# 4	6 -# 4
8 - 10	8.6754	8.750	# 5 at 5.500	10 -# 4	6 -# 4
8 - 11	8.7020	8.750	# 5 at 5.500	11 -# 4	6 -# 4
9 - 0	8.7286	8.750	# 5 at 5.375	11 -# 4	6 -# 4
9 - 1	8.7605	8.875	# 5 at 5.500	11 -# 4	6 -# 4
9 - 2	8.7871	8.875	# 5 at 5.375	11 -# 4	6 -# 4
9 - 3	8.8136	8.875	# 5 at 5.375	11 -# 4	6 -# 4
9 - 4	8.8401	8.875	# 5 at 5.375	11 -# 4	6 -# 4
9 - 5	8.8665	8.875	# 5 at 5.250	12 -# 4	6 -# 4

SECTION IV – CONCRETE AND REINFORCING STEEL

BRIDGE DECK DESIGN No. 4.01

When designing bridge decks, the following criteria shall be applied:

For cast-in-place decks north of the fall line:

1. Specify Class AA concrete except for post-tensioned concrete boxes which shall have Class AA as a minimum, but may require a higher 28-day strength.
2. **Specify 2 ¾" (70 mm) cover to top bar reinforcement for bridge decks on interstate routes, state routes and routes with design year ADT equal to or greater than 2000.**
3. Specify 2 ½" (65 mm) cover to top bar reinforcement for bridge decks on all other routes.

For cast-in-place decks south of the fall line:

1. Specify Class AA concrete except for post-tensioned concrete boxes which shall have Class AA as a minimum, but may require a higher 28-day strength.
2. Specify 2 ¼" (60 mm) cover to top bar reinforcement for bridge decks on interstate routes, state routes and routes with design year ADT equal to or greater than 2000.
3. Specify 2" (50 mm) cover to top bar reinforcement for bridge decks on all other routes.

For bridge decks of precast concrete elements, specify 2" cover to top bar reinforcement statewide.

Note that ¼" of concrete thickness may be planed off of the top of cast-in-place decks on interstate routes, state routes and routes with design year ADT equal to or greater than 2000. Therefore, reduce slab thickness accordingly for strength calculations of composite slabs on steel or PSC beams and post-tensioned boxes.

Deck slabs shall be designed by the Service Load method with f_c = 1400 psi (10 MPa), as a rule.

The minimum 28 day strength (f'_c) for the deck concrete shall be 3500 psi (25 MPa). Slabs shall be designed so that the main slab reinforcement is the same in the bottom of the slab as in the top. To achieve this, the effective depth shall be taken as the distance from the bottom of the slab to the centroid of the top main reinforcing steel for both positive and negative moment. Positive and negative moments shall be assumed to be equal and shall be calculated in accordance with the AASHTO Specifications.

See Fig. 4-01 for a location map of the fall line for Georgia.

FALL LINE MAP
Figure 4-01

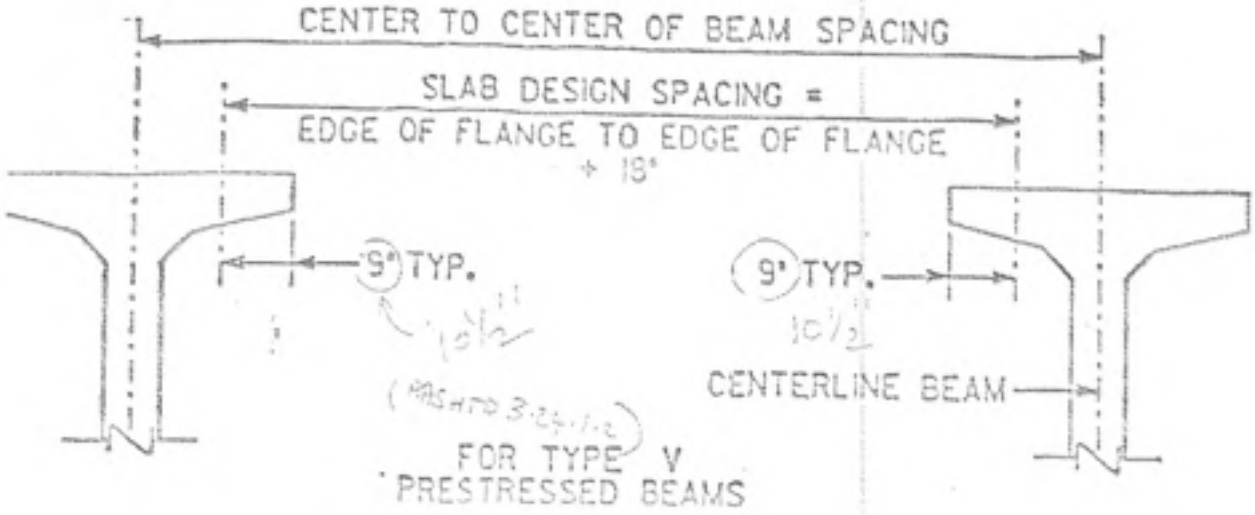

FOR TYPE V
PRESTRESSED BEAMS

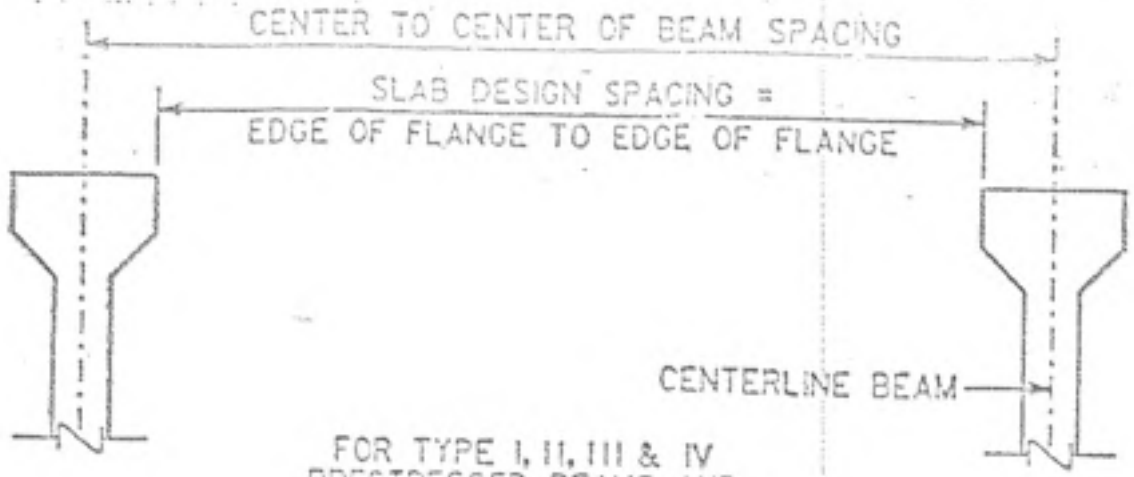

FOR TYPE I, II, III & IV
PRESTRESSED BEAMS AND
CONCRETE T-BEAMS

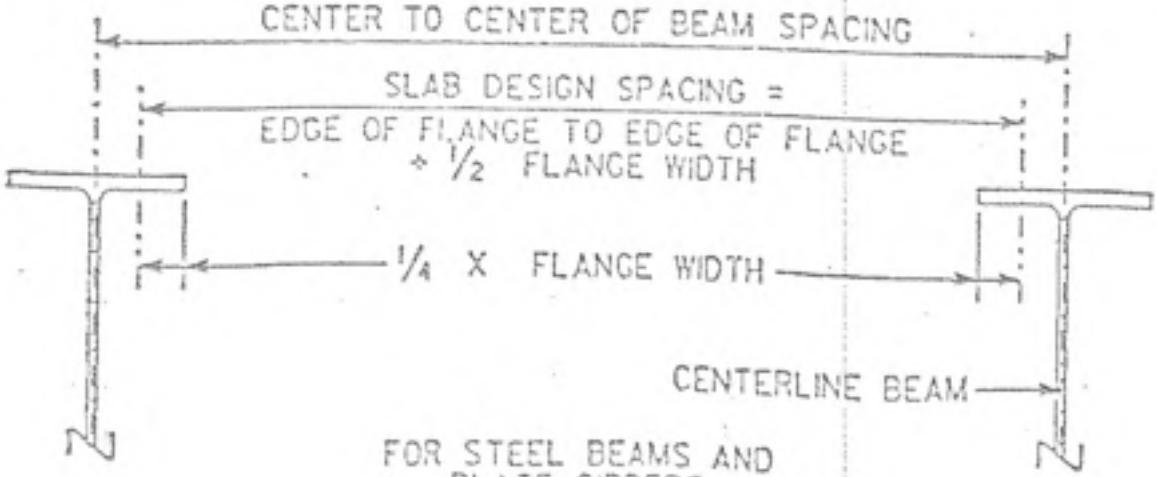

FOR STEEL BEAMS AND
PLATE GIRDERS

FIG. NO. 1 (cont'd)

CALCULATION COVER SHEET

PROJECT	JOB NO.	CALC NO.	SHEET
I-75 / I-575 NORTHWEST CORRIDOR	NH000-0073-03(242)	BR#32	1
SUBJECT	DISCIPLINE		
Beam Design Input	STRUCTURAL		

CALCULATION STATUS DESIGNATION	PRELIMINARY	CONFIRMED	SUPSEDED	VOIDED	INCOMPLETE
	☐	☐	☐	☐	X

COMPUTER PROGRAM/TYPE	SCP	MAINFRAME	PC	PROGRAM	VERSION/RELEASE NO.
	(X) YES ( ) NO	( )	(X)	Excel	2003

Note 1: Georgia Department of Transportation (GDOT) terminated Contract Number TOURDPPI60072 for its convenience prior the completion of all work under that contract and directed that the work with respect to these calculations be discontinued.
(a) These calculations were not completed at the time of GDOT's direction and the information contained herein is not complete and/or has not been fully verified or checked. These calculations are a work-in-progress and are presented only as such.
(b) Any user is cautioned that the use of these calculations and any related information or calculations, without access to factors and without proper regard for their purpose, could lead to erroneous conclusions.
(c) If any such calculations or any information contained herein is used in future work efforts or any follow on design work activity, a complete confirmation of the information contained herein should be performed prior to any such use.
(d) GTP has no responsibility for the use of this information not under its direct control.

Beam Design Input calculations are included for spans 1, 2 and 3.

NO.	REASON FOR REVISION	TOTAL NO. OF SHEETS	LAST SHEET NO.	BY	CHECKED	APPROVED/ ACCEPTED	DATE
A	As per GDOT's termination for convenience direction	16	16	JCR			11/30/09

RECORD OF REVISIONS

CALCULATION SHEET

PROJECT: I-75 / I-575 NORTHWEST CORRIDOR
JOB NUMBER NH000-0073-03(242)
CALC NO. BR#32

SUBJECT: Beam Design Input - Span 1 SHEET NO.
BY: JCR DATE: 11/30/2009 SHEET REV.

Sufficient sample calculations representative of the scope and conditions in the design calculation were performed and the results compared to demonstrate the computer program adequacy.

BRIDGE: I-75 over Big Shanty Connector
COUNTY: COBB
P.I. NO: 714136
PROJECT: NH000-0073-03(242)

Description: BT 63 at 8.5ft
Design Span Length: 39.440 ft.
Span No.: 1

J.R. TRIMBLE, INC.
JRT

JOB NO: 28S717
DESIGNED BY: WBN
CHECKED BY: JCR

✓ JCR 10-16-09

TYPICAL DECK SECTIONS

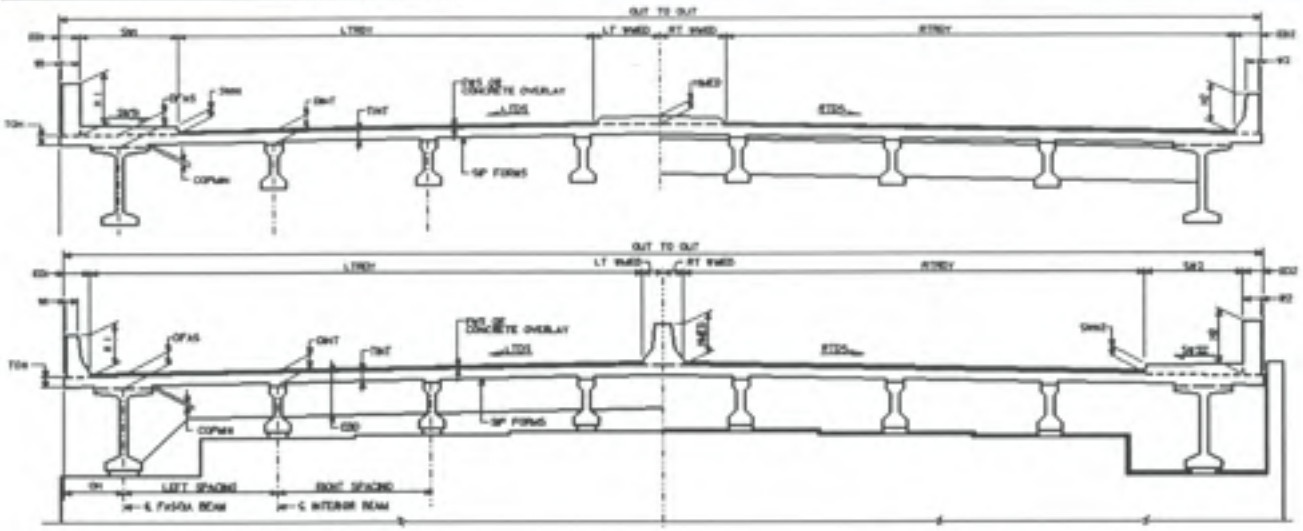

SECTION THRU EDGE BEAM

SECTION THRU ENDWALL

Description: BT 63 at 8.5ft
Design Span Length: 39.440 ft.
Span No.: 1

NON-COMPOSITE DEAD LOADS PER BEAM

SLAB:

D_{INT} =	10 in.
T_{INT} =	8 in.
INTEGRAL WEARING SURFACE THICKNESS =	0.25 in.
DESIGN T_{INT} =	7.75 in.
INT. COP_{MIN} =	1.5 in.
INT. COP_{MAX} =	2 in.
INT. COP. DEPTH DESIGN METHOD:	Average Coping
INT. COP_{WIDTH} =	42 in.
AVG. INT. COP DEPTH =	1.75 in.
SIP FORMS:	Yes
SLAB $CONC._{WEIGHT}$ =	0.150 k/ft^3
BEAM $CONC._{WEIGHT}$ =	0.150 k/ft^3

INT. $SLAB_{WEIGHT}$ =	0.650 klf
INTEGRAL WEARING $SURFACE_{WEIGHT}$ =	0.027 klf
INT. COP_{WEIGHT} =	0.077 klf
INT. SIP_{WEIGHT} =	0.080 klf
INT. $BEAM_{WEIGHT}$ =	0.743 klf
NON-COMPOSITE DEAD LOAD PER BEAM =	1.749 klf

INTERIOR BEAM PROPERTIES

INT. BEAM TYPE:	Bulb Tee Type 63
Top Flange Width =	42 in.
Beam Depth =	63 in.
Web Thickness =	6 in.
H_1 =	3.5 in.
F_1 =	2.43 in.
H_2 =	6 in.
W_2 =	26 in.
F_2 =	4.5 in.
E.B. Depth (no coping) =	52.5 in.
Diaphragm Height =	55 in.
Cross Sectional Area =	713 in^2
A1 =	49 in^2
A2 =	22.5 in^2
AB =	228 in^2
INT. $BEAM_{WEIGHT}$ =	0.743 klf

CONCRETE STRENGTHS:

$f'_{c\ BEAM}$ =	5000 psi
$f'_{c\ DIAPH}$ =	4500 psi
$f'_{c\ SLAB}$ =	3500 psi
SIT =	0.201 k / in^2
SFB =	0.424 k / in^2

TYPE OF STRANDS =	0.5 in. dia. low-relax
DRAPED STRANDS ?	No
STRAND AREA =	0.167 sq. in.
$RS_{(1hr)}$ =	0.75
$RT_{(1hr)}$ =	0.22

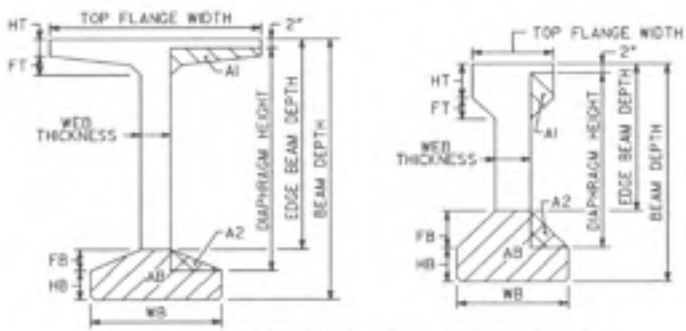

DEFINITION OF BEAM AREAS FOR EB & DIAPH. CALCS

BRIDGE: I-75 over Big Shanty Connector
COUNTY: COBB
P.I. NO: 714130
PROJECT: NH000-0073-03(242)
Description: BT 63 at 8.5ft
Design Span Length: 39.440 ft.
Span No.: 1

J.B. TRIMBLE, INC.

JOB NO: 250717
DESIGNED BY: WBN
CHECKED BY: JCR

EW, DIAPH, EDGE BEAM DIMENSIONS & CALCS:

SPAN TYPE:	End Span
EW. TYPE:	Endwall 1: Expansion
INT. EW. WIDTH =	1.50 ft.
INT. EW. HEIGHT =	5.67 ft.
BM. EMBED. FOR EW. =	7 in.
PAV. REST WIDTH =	8 in.
INT. EW. WEIGHT =	11.681 kips
DIAPH. WIDTH =	10 in.
DIAPH. HEIGHT =	55 in.
INT. DIAPH. WEIGHT =	4.459 kips
INT. EB. HEIGHT =	54.5 in.
INT. EB. WIDTH =	12 in.
BM. EMBED. FOR EB. =	7 in.
INT. EB. WEIGHT =	5.635 kips

DIAPHRAGMS
1

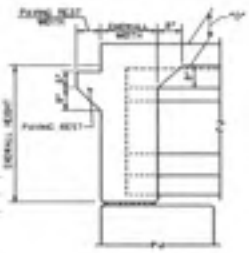

SECTION AT ENDWALL

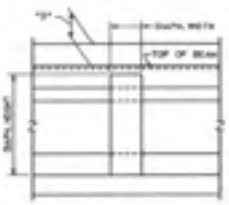

SECTION THRU DIAPHRAGM

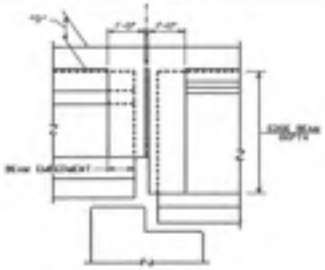

SECTION THRU EDGE BEAM

INT. P-LOADS:	LOAD	POSITION	REACTION	MOMENT
EW. =	11.681 kips	0.00 ft.	11.681 kips	0.000 k-ft.
DIAPH. =	4.459 kips	19.72 ft.	2.230 kips	43.968 k-ft.
DIAPH. =	N/A	N/A	N/A	N/A
DIAPH. =	N/A	N/A	N/A	N/A
EB. =	5.635 kips	39.44 ft.	0.000 kips	0.000 k-ft.
	TOTAL POINT DEAD LOAD PER BEAM =		13.910 kips	43.968 k-ft.

DECK SECTION DIMENSIONS & CALCS:

LEFT BARRIER

BARRIER TYPE:	Jersey Barrier
FENCING OPTION:	None
ED_1 =	1.625 ft.
W_1 =	0.75 ft.
H_1 =	2.667 ft.
LTDS =	2.0000 %

MEDIAN

MEDIAN TYPE: NEW Barrier

EXISTING RIGHT BARRIER

BARRIER TYPE:	Jersey Barrier
FENCING OPTION:	None
ED_2 =	1.625 ft.
W_2 =	0.75 ft.
H_2 =	2.667 ft.
RTDS =	2.0000 %

BRIDGE TYPE =	Bridge Widening
SPAN LENGTH =	39.440 ft.
SKEW ANGLE =	77.5554 degrees
LEFT SPACING =	8.5 ft.
RIGHT SPACING =	8.5 ft.
LEFT OVERHANG =	3.875 ft.
LEFT OFFSET TO BARRIER =	1.5 in.
RIGHT OFFSET TO BARRIER =	1.5 in.
SPACING TO SET BEAM =	8.25 ft.
NO. OF NEW BEAMS =	3 beams
NO. OF BEAMS IN EXISTING BRIDGE =	9 beams
NO. OF SET BEAMS W/ COMP. LOADS =	1 beams
TOTAL NO. OF BEAMS SUPPORTING WIDENING =	4 beams
NO. OF NEW BAYS =	3 bays

IS MEDIAN BARRIER CENTERED?	No
OFFSET TO LEFT OR RIGHT?	Left
OFFSET DISTANCE =	15 ft.
WIDENED BRIDGE OUT TO OUT =	27.125 ft.
EXISTING BRIDGE OUT TO OUT =	60.125 ft.
FINISHED BRIDGE OUT TO OUT =	87.250 ft.
(gross Median only for RDWY Width Calculations =	Yes)
LT RDWY =	26.000 ft.
RT RDWY =	56.000 ft.
TOTAL WIDENED RDWY WIDTH =	84.000 ft.

NOTE: BRIDGE WIDENING IS TO ONE SIDE ONLY !

With of Median = 2 ft.

Including median width

Description: BT 63 at 8.5ft
Design Span Length: 39.440 ft.
Span No.: 1

SUPERIMPOSED DEAD LOADS:

LEFT BARRIER

BARRIER WEIGHT =	0.405 klf
FENCING WEIGHT =	0.000 klf

MEDIAN

MEDIAN WEIGHT = 0.472 klf

NOTE: BARRIER WEIGHT INCLUDES SIDEWALK WEIGHT, IF PRESENT

RIGHT BARRIER

BARRIER WEIGHT =	0.405 klf
FENCING WEIGHT =	0.000 klf

FWS DESIGN METHOD:	Avg. Beam Sp.
WEIGHT OF FWS =	30 lb/sf
DECK OVERLAY:	No
AVG. THICKNESS =	0 in.
OUT TO OUT DIST. GREATER THAN 66'-5, DISTRIBUTE BARRIER DL et. al. ONTO OUTER BEAMS!	
BEAM ON CENTERLINE ?	Yes
DIST. MEDIAN AND/OR BARR. TO ALL BEAMS ?	No
OVERRIDE NO. OF BM. TO DIST. LT BARRIER ?	No
NO. OF BEAMS DIST. TO LT BARRIER =	4 beams
OVERRIDE NO. OF BM. TO DIST. MED. BARRIER ?	Yes
NO. OF BEAMS DIST. TO MED. BARRIER =	4 beams
OVERRIDE NO. OF BM. TO DIST. RT BARRIER ?	No
NO. OF BEAMS DIST. TO RT BARRIER =	4 beams

BEAMS SUPPORTING LT BARRIER
BM 1 - BM 4

BEAMS SUPPORTING MED BARRIER
BM 3 - BM 6

BEAMS SUPPORTING RT BARRIER
BM 1 - BM 4

SUPERIMPOSED LOADS PER BRIDGE:

FWS WEIGHT =	2.520 klf per bridge
DECK OVERLAY WT. =	0.000 klf per bridge
UTILITY WEIGHT TO SUPERSTRUCTURE =	0.000 klf per bridge
TOTAL SUPERIMPOSED DEAD LOAD =	**3.802 klf per bridge**

SUPERIMPOSED LOADS PER BEAM:

FWS WEIGHT =	0.255 klf per beam
DECK OVERLAY WT. =	0.000 klf per beam
UTILITY WEIGHT TO SUPERSTRUCTURE =	0.000 klf per beam
LT BARRIER DEAD LOAD =	0.131 klf per beam
MED. BARRIER DEAD LOAD =	0.118 klf per beam
RT BARRIER DEAD LOAD =	0.131 klf per beam
DOUBLE LOADING DEAD LOAD =	0.219 klf per beam
CONTROLLING SUPERIMPOSED DEAD LOAD =	**0.474 klf per beam**

DOUBLE LOADING GOVERNS DESIGN

BRIDGE CONFIGURATION OVERLAPS BARRIER AND / OR MEDIAN LOADS, CREATING WORST BEAM LOADING CASE

DOUBLED LOADING CASES

	BARRIER ONLY	RAISED MEDIAN	MED. BAR.
WITHOUT OVERRIDE	0.202 klf per beam	0.359 klf per beam	0.219 klf per beam
WITH OVERRIDE	0.202 klf per beam	0.359 klf per beam	0.219 klf per beam

BRIDGE: I-75 over Big Shanty Connector
COUNTY: COBB
P.I. NO: 714138
PROJECT: NH000-0073-03(242)

J.B. TRIMBLE, INC.

JOB NO: 255717
DESIGNED BY: WBN
CHECKED BY: JCR

COMPOSITE SECTION MODULUS CALC:

SPAN LENGTH = 39.440 ft.

BEAM MOMENT OF INERTIA =	392,516 in^4
BEAM Y_{BM} =	32.12 in.
INT. COP_{MIN} =	1.5 in.
DESIGN T_{INT} =	7.75 in.
E_{BM} =	4.29 x 10^6 psi
E_{SLAB} =	3.59 x 10^6 psi
modular ratio =	1.19

AASHTO 8.10.1.1 - Compression Flange Width

wBM FLANGE =	42.00	in.
B_{eff} = Bm Spacing =	**102.00**	**in. CONTROLS**
B_{eff} = ¼ Span Length =	**118.32**	in.
B_{eff} = WBM FLANGE + 2[6 tSLAB] =	**135.00**	in.
Add. Non-Comp. DL (WDLNC) =	0.000 klf	(T-Beam Only)
Y_C =	49.57 in.	
COMPOSITE MOM. OF INERTIA =	846,867 in^4	

COMPOSITE SECTION MODULI:

SECTION MOD. AT TOP OF SLAB =	37,337 in^3
SECTION MOD. AT TOP OF BEAM =	63,051 in^3
SECTION MOD. AT BOT. OF BEAM =	17,085 in^3

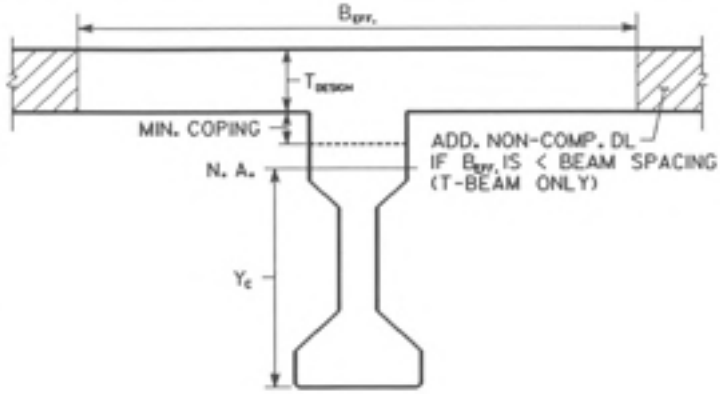

Description: BT 63 at 8.5ft
Design Span Length: 39.440 ft.
Span No.: 1

DISTRIBUTION & DEFLECTION FACTOR CALCS:

DISTRIBUTION FACTOR CALCS:

MOMENT	1.545	WHEEL
	0.773	AXLE
SHEAR	1.824	WHEEL
	0.912	AXLE

DEFLECTION FACTOR CALCS:

ALLOW USER TO DEFINE NO. OF LANES ?	Yes	
USER DEFINED NO. OF LANES =	7	8.5 ft.
		8.5 ft.
ALLOW USER TO DEFINE NO. OF BEAMS ?	Yes	
USER DEFINED NO. OF BEAMS =	12	-> 12 beams will be used for DFD calcs.
REDUCTION FACTOR =	0.75	
DFD =	0.875	

(AASHTO 4.7.3) =

LIVE LOAD CALCS:

LEFT SIDEWALK LIVE LOAD:

		REACTION	MOMENT
SW_1 =	0 ft.	0.00 kips	0.000 k-ft.
LEFT SW. LL. =	0.060 kips / ft^2		
SW LL PER BEAM =	0.000 klf		

RIGHT SIDEWALK LIVE LOAD:

		REACTION	MOMENT
SW_2 =	0 ft.	0.00 kips	0.000 k-ft.
RIGHT SW. LL. =	0.060 kips / ft^2		
SW LL PER BEAM =	0.000 klf		

IMPACT FACTOR: 1.30

HS 20 LOADING:

MIDSPAN:	426.500 k-ft.
MAX:	436.487 k-ft.

	REACTION	R x DF x I
TRUCK:	54.879 kips	60.995 kips
LANE:	38.560 kips	43.496 kips

	REACTION	MOMENT
TOTAL LL+I =	60.995 kips	428.439 k-ft.
MAX TOTAL LL+I =		**438.471 k-ft.**

BRIDGE: I-75 over Big Shanty Connector
COUNTY: COBB
P.I. NO: 714130
PROJECT: NH000-0073-03(242)

J.B. TRIMBLE, INC.

JOB NO: 258717
DESIGNED BY: WBN
CHECKED BY: JCR

SUMMARY OF DEAD & LIVE LOADINGS:

NON-COMPOSITE DEAD LOADS PER BEAM:

INT. SLAB $_{WEIGHT}$ =	0.850 klf	
INT. COP $_{WEIGHT}$ =	0.077 klf	
INT. SIP $_{WEIGHT}$ =	0.080 klf	
INT. BEAM $_{WEIGHT}$ =	0.743 klf	
TOTAL N-COMP. DL =	**1.749 klf**	

SUPERIMPOSED DEAD LOADS PER BEAM:

LEFT BARRIER WEIGHT =	0.101 klf
LEFT FENCING WEIGHT =	0.000 klf
MEDIAN WEIGHT =	0.118 klf
RIGHT BARRIER WEIGHT =	0.101 klf
RIGHT FENCING WEIGHT =	0.000 klf
FWS WEIGHT =	0.255 klf
DECK OVERLAY WT. =	0.000 klf
UTILITY WEIGHT =	0.000 klf
TOTAL SUPERIMPOSED DL =	**0.474 klf**

LOADING RESULTS

	LOADING	REACTION	MOMENT
TOTAL N-COMP. DL =	1.749 klf	34.496 kips	340.127 k-ft
TOTAL SUPERIMPOSED DL =	0.474 klf	9.347 kips	92.164 k-ft
TOTAL POINT DL =		13.910 kips	43.968 k-ft
TOTAL DL =	**2.223 klf**	**57.753 kips**	**476.259 k-ft**
LEFT SW LL =	0.000 klf	0.000 kips	0.000 k-ft
RIGHT SW LL =	0.000 klf	0.000 kips	0.000 k-ft
TOTAL SW LL =	**0.000 klf**	**0.000 kips**	**0.000 k-ft**
MAX OF TRUCK OR LANE LL+I =		60.995 kips	428.439 k-ft
TOTAL DL + SW LL + (LL + I) =		**118.748 kips**	**904.697 k-ft.**

Description: ST 63 at 8.5ft
Design Span Length: 39.440 ft.
Span No.: 1

SUMMARY OF PROGRAM INPUT:

SIMPLE SPAN PROGRAM INPUT:

INTERIOR BEAM

LENGTH =	39.440 ft. ✓	$f'_{c\ slab}$ =	5000 psi
Moment Dist. Factor (DFM) =	1.545 ✓	$f'_{c\ beam}$ =	4500 psi
End Shear Dist. Factor (DFV) =	1.824 ✓	WT =	0.201 k / in^2
LL Deflection Dist. Factor (DFD) =	0.875 ✓	WB =	0.424 k / in^2
Non- Composite DL ($W_{N.C.}$) =	1.007 klf ✓	E_{slab} =	4.29 x 10^6 psi
Composite DL ($W_{S.I.}$) =	0.474 klf ✓	E_{beam} =	3.59 x 10^6 psi
Sidewalk LL (W_{walk}) =	0.000 klf		
Effective Concrete Width (W) =	102.00 in. ✓		
Concrete Slab Thickness (T) =	7.750 in. ✓		
Minimum Coping (D) =	1.500 in. ✓		

P-LOADS:	P1	P2	P3	P4	P5
X	0.000 ft.	19.720 ft.	39.440 ft.	N/A	N/A
LOAD	11.681 kips	4.458 kips	5.635 kips	N/A	N/A
	✓	✓	✓		

CALCULATION SHEET

PROJECT: I-75 / I-575 NORTHWEST CORRIDOR
JOB NUMBER NH000-0073-03(242)
CALC NO. BR#32

SUBJECT: Beam Design Input - Span 2 SHEET NO.
BY: JCR DATE: 11/30/2009 SHEET REV.

Sufficient sample calculations representative of the scope and conditions in the design calculation were performed and the results compared to demonstrate the computer program adequacy.

BRIDGE: I-75 over Big Shanty Connector
COUNTY: COBB
P.I. NO: 714130
PROJECT: NH000-0073-03(242)

J.B. TRIMBLE, INC.
JBT

JOB NO: 258717
DESIGNED BY: WBN
CHECKED BY: JCR

✓JCR 10-16-09

Description: BT 63 at 8.5ft
Design Span Length: 108.619 ft.
Span No.: 2

TYPICAL DECK SECTIONS:

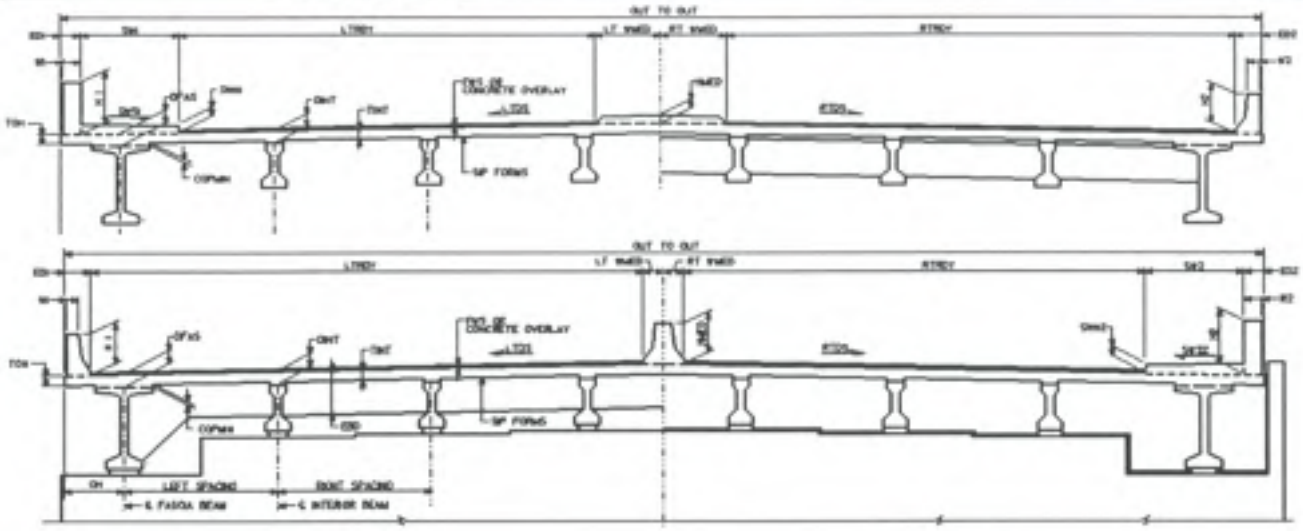

SECTION THRU EDGE BEAM

SECTION THRU ENDWALL

Description: BT 63 at 8.5ft
Design Span Length: 108.619 ft.
Span No.: 2

NON-COMPOSITE DEAD LOADS PER BEAM:

SLAB:

D_{INT} =	11.375 in.
T_{INT} =	8 in.
INTEGRAL WEARING SURFACE THICKNESS =	0.25 in.
DESIGN T_{INT} =	7.75 in.
INT. COP_{MIN} =	1.5 in.
INT. COP_{MAX} =	3.375 in.
INT. COP. DEPTH DESIGN METHOD:	Average Coping
INT. COP_{WIDTH} =	42 in.
AVG. INT. COP DEPTH =	2.4375 in.
SIP FORMS:	Yes
SLAB $CONC._{WEIGHT}$ =	0.150 k/ft^3
BEAM $CONC._{WEIGHT}$ =	0.150 k/ft^3

INT. $SLAB_{WEIGHT}$ =	0.850 klf
INTEGRAL WEARING $SURFACE_{WEIGHT}$ =	0.027 klf
INT. COP_{WEIGHT} =	0.107 klf
INT. SIP_{WEIGHT} =	0.080 klf
INT. $BEAM_{WEIGHT}$ =	0.743 klf
NON-COMPOSITE DEAD LOAD PER BEAM =	1.779 klf

INTERIOR BEAM PROPERTIES:

INT. BEAM TYPE:	Bulb Tee Type 63
Top Flange Width =	42 in.
Beam Depth =	63 in.
Web Thickness =	6 in.
H_1 =	3.5 in.
F_T =	2.43 in.
H_2 =	6 in.
W_B =	26 in.
F_B =	4.5 in.
E.B. Depth (no coping) =	52.5 in.
Diaphragm Height =	55 in.
Cross Sectional Area =	713 in^2
A1 =	49 in^2
A2 =	22.5 in^2
AB =	228 in^2
INT. $BEAM_{WEIGHT}$ =	0.743 klf

CONCRETE STRENGTHS:

$f'_{c\ BEAM}$ =	7000 psi
$f'_{c\ SEAL}$ =	6500 psi
$f'_{c\ SLAB}$ =	3500 psi
SIT =	0.242 k / in^2
SFB =	0.502 k / in^2

TYPE OF STRANDS =	0.5 in. dia. low-relax
DRAPED STRANDS ?	Yes
STRAND AREA =	0.167 sq. in.
RB_{FACTOR} =	0.75
RT_{FACTOR} =	0.22

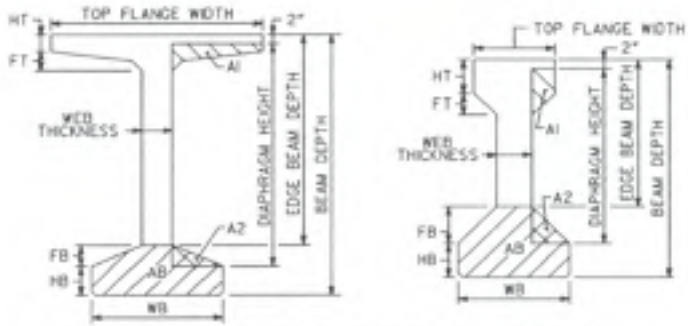

DEFINITION OF BEAM AREAS FOR EB & DIAPH. CALCS

BRIDGE: I-75 over Big Shanty Connector
COUNTY: COBB
P.I. NO: 714130
PROJECT: NH000-0073-03(242)
Description: BT 63 at 8.5ft
Design Span Length: 108.619 ft.
Span No.: 2

J.B. TRIMBLE, INC.

JOB NO: 25D1T
DESIGNED BY: WBN
CHECKED BY: JCR

EW, DIAPH, EDGE BEAM DIMENSIONS & CALCS:

SPAN TYPE: Intermediate Span

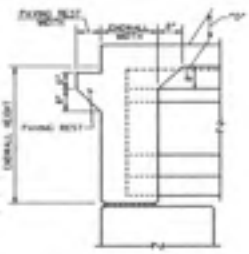

SECTION AT ENDWALL

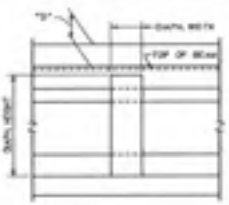

SECTION THRU DIAPHRAGM

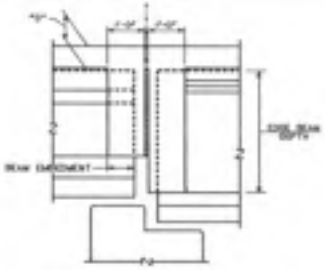

SECTION THRU EDGE BEAM

		# DIAPHRAGMS
DIAPH. WIDTH =	10 in.	
DIAPH. HEIGHT =	55 in.	1
INT. DIAPH. WEIGHT =	4.459 kips	

INT. EB. HEIGHT =	55.875 in.
INT. EB. WIDTH =	12 in.
BM. EMBED. FOR EB. =	7 in.
INT. EB. WEIGHT =	5.785 kips

INT. P-LOADS:	LOAD	POSITION	REACTION	MOMENT
EB. =	5.785 kips	0.00 ft.	5.785 kips	0.000 k-ft.
DIAPH. =	4.459 kips	54.31 ft.	2.230 kips	121.088 k-ft.
DIAPH. =	N/A	N/A	N/A	N/A
DIAPH. =	N/A	N/A	N/A	N/A
EB. =	5.785 kips	108.62 ft.	0.000 kips	0.000 k-ft.
	TOTAL POINT DEAD LOAD PER BEAM =		8.014 kips	121.088 k-ft.

DECK SECTION DIMENSIONS & CALCS:

LEFT BARRIER

BARRIER TYPE: Jersey Barrier
FENCING OPTION: None
ED_1 = 1.625 ft.
W_1 = 0.75 ft.
H_1 = 2.667 ft.
LTDS = 2.0000 %

MEDIAN

MEDIAN TYPE: NEW Barrier

EXISTING RIGHT BARRIER

BARRIER TYPE: Jersey Barrier
FENCING OPTION: None
ED_2 = 1.625 ft.
W_2 = 0.75 ft.
H_2 = 2.667 ft.
RTDS = 2.0000 %

IS MEDIAN BARRIER CENTERED? No
OFFSET TO LEFT OR RIGHT? Left
OFFSET DISTANCE = 15 ft.

BRIDGE TYPE = Bridge Widening
SPAN LENGTH = 108.619 ft.
SKEW ANGLE = 77.5554 degrees

LEFT SPACING = 8.5 ft.
RIGHT SPACING = 8.5 ft.
LEFT OVERHANG = 3.875 ft.

WIDENED BRIDGE OUT TO OUT = 27.125 ft.
EXISTING BRIDGE OUT TO OUT = 60.125 ft.
FINISHED BRIDGE OUT TO OUT = 87.250 ft.

NOTE: BRIDGE WIDENING IS TO ONE SIDE ONLY!

LEFT OFFSET TO BARRIER = 1.5 in.
RIGHT OFFSET TO BARRIER = 1.5 in.
SPACING TO SET BEAM = 6.25 ft.
NO. OF NEW BEAMS = 3 beams
NO. OF BEAMS IN EXISTING BRIDGE = 9 beams
NO. OF SET BEAMS W/ COMP. LOADS = 1 beams
TOTAL NO. OF BEAMS SUPPORTING WIDENING = 4 beams
NO. OF NEW BAYS = 3 bays

Ignore Median only for FOINT Width Calculations = Yes
Width of Median = 2 ft.

LT RDWY = 26.000 ft.
RT RDWY = 56.000 ft.
TOTAL WIDENED RDWY WIDTH = 84.000 ft. Including median width

Description: BT 63 at 8.5ft
Design Span Length: 108.619 ft.
Span No.: 2

SUPERIMPOSED DEAD LOADS:

LEFT BARRIER

BARRIER WEIGHT = 0.405 klf
FENCING WEIGHT = 0.000 klf

MEDIAN

MEDIAN WEIGHT = 0.472 klf

NOTE: BARRIER WEIGHT INCLUDES SIDEWALK WEIGHT, IF PRESENT

RIGHT BARRIER

BARRIER WEIGHT = 0.405 klf
FENCING WEIGHT = 0.000 klf

FWS DESIGN METHOD: Avg. Beam Sp.

WEIGHT OF FWS = 30 lb/sf

DECK OVERLAY: No
AVG. THICKNESS = 0 in.

OUT TO OUT DIST. GREATER THAN 66'-5, DISTRIBUTE BARRIER DL et. al. ONTO OUTER BEAMS!

BEAM ON CENTERLINE ? Yes

DIST. MEDIAN AND/OR BARR. TO ALL BEAMS ? No

OVERRIDE NO. OF BM. TO DIST. LT BARRIER ? No
NO. OF BEAMS DIST. TO LT BARRIER = 4 beams

BEAMS SUPPORTING LT BARRIER
BM 1 - BM 4

OVERRIDE NO. OF BM. TO DIST. MED. BARRIER ? Yes

NO. OF BEAMS DIST. TO MED. BARRIER = 4 beams

BEAMS SUPPORTING MED BARRIER
BM 3 - BM 6

OVERRIDE NO. OF BM. TO DIST. RT BARRIER ? No
NO. OF BEAMS DIST. TO RT BARRIER = 4 beams

BEAMS SUPPORTING RT BARRIER
BM 1 - BM 4

DOUBLE LOADING GOVERNS DESIGN

BRIDGE CONFIGURATION OVERLAPS BARRIER AND / OR MEDIAN LOADS, CREATING WORST BEAM LOADING CASE

DOUBLED LOADING CASES

	BARRIER ONLY	RAISED MEDIAN	MED. BAR.
WITHOUT OVERRIDE	0.202 klf per beam	0.359 klf per beam	0.219 klf per beam
WITH OVERRIDE	0.202 klf per beam	0.359 klf per beam	0.219 klf per beam

SUPERIMPOSED LOADS PER BRIDGE:

FWS WEIGHT = 2.520 klf per bridge
DECK OVERLAY WT. = 0.000 klf per bridge
UTILITY WEIGHT TO SUPERSTRUCTURE = 0.000 klf per bridge
TOTAL SUPERIMPOSED DEAD LOAD = 3.802 klf per bridge

SUPERIMPOSED LOADS PER BEAM:

FWS WEIGHT = 0.255 klf per beam
DECK OVERLAY WT. = 0.000 klf per beam
UTILITY WEIGHT TO SUPERSTRUCTURE = 0.000 klf per beam

LT BARRIER DEAD LOAD = 0.101 klf per beam
MED. BARRIER DEAD LOAD = 0.118 klf per beam
RT BARRIER DEAD LOAD = 0.101 klf per beam
DOUBLE LOADING DEAD LOAD = 0.219 klf per beam

CONTROLLING SUPERIMPOSED DEAD LOAD = **0.474 klf per beam**

BRIDGE: I-75 over Big Shanty Connector
COUNTY: COBB
P.I. NO: 714130
PROJECT: NH000-0073-03(242)

J.R. TRIMBLE, INC.
JRT

JOB NO: 255717
DESIGNED BY: WBN
CHECKED BY: JOR

COMPOSITE SECTION MODULUS CALC:

SPAN LENGTH = **108.619 ft.**

BEAM MOMENT OF INERTIA =	382,516 in^4
BEAM Y_{BC} =	32.12 in.
INT. COP_{MIN} =	1.5 in.
DESIGN T_{SLAB} =	7.75 in.
E_{BEAM} =	5.07 x 10^6 psi
E_{SLAB} =	3.59 x 10^6 psi
modular ratio =	1.41

AASHTO 8.10.1.1 - Compression Flange Width

wBM FLANGE =	42.00	in.
B_{eff} = Bm Spacing =	**102.00**	**in. CONTROLS**
B_{eff} = ¼ Span Length =	**325.86**	in.
B_{eff} = WBM FLANGE + 2[6 tSLAB] =	**135.00**	in.
Add. Non-Comp. DL (WDLNC) =	0.000 klf	(T-Beam Only)
Y_C =	48.06 in.	
COMPOSITE MOM. OF INERTIA =	807,485 in^4	

COMPOSITE SECTION MODULI:

SECTION MOD. AT TOP OF SLAB =	33,387 in^3
SECTION MOD. AT TOP OF BEAM =	54,065 in^3
SECTION MOD. AT BOT. OF BEAM =	16,800 in^3

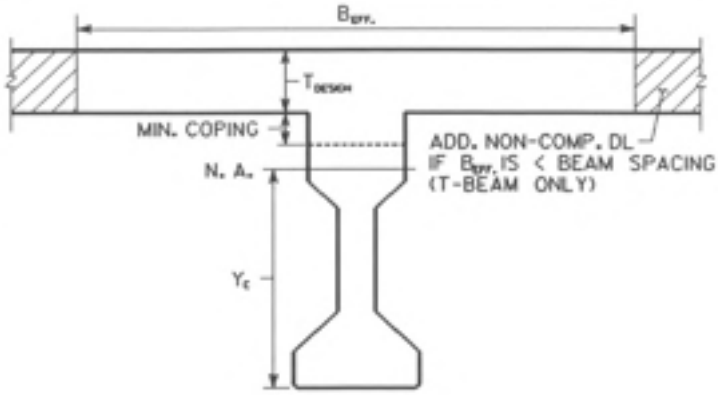

Description: BT 63 at 8.5ft
Design Span Length: 108.619 ft.
Span No.: 2

DISTRIBUTION & DEFLECTION FACTOR CALCS:

DISTRIBUTION FACTOR CALCS:

MOMENT	1.545	WHEEL
	0.773	AXLE
SHEAR	1.824	WHEEL
	0.912	AXLE

(AASHTO 8.7.3) =

DEFLECTION FACTOR CALCS:

ALLOW USER TO DEFINE NO. OF LANES ?	Yes	
USER DEFINED NO. OF LANES =	7	8.5 ft.
		8.5 ft.
ALLOW USER TO DEFINE NO. OF BEAMS ?	Yes	
USER DEFINED NO. OF BEAMS =	12	-> 12 beams will be used for DFD calcs.
REDUCTION FACTOR =	0.75	
DFD =	0.875	

LIVE LOAD CALCS:

LEFT SIDEWALK LIVE LOAD:

		REACTION	MOMENT
SW_1 =	0 ft.	0.00 kips	0.000 k-ft.
LEFT SW. LL. =	0.063 kips / ft^2		
SW LL PER BEAM =	0.000 klf		

IMPACT FACTOR: 1.21

RIGHT SIDEWALK LIVE LOAD:

		REACTION	MOMENT
SW_2 =	0 ft.	0.00 kips	0.000 k-ft.
RIGHT SW. LL. =	0.063 kips / ft^2		
SW LL PER BEAM =	0.000 klf		

HS 20 LOADING:

			REACTION	R x DF x I
MIDSPAN:	1673.000 k-ft.	TRUCK:	65.606 kips	67.141 kips
MAX:	1676.613 k-ft.	LANE:	60.720 kips	61.386 kips

	REACTION	MOMENT
TOTAL LL+I =	67.141 kips	1569.457 k-ft.
	MAX TOTAL LL+I =	**1572.846 k-ft.**

BRIDGE: I-75 over Big Shanty Connector
COUNTY: COBB
P.I. NO: 714130
PROJECT: NH000-0073-03(242)

J.B. TRIMBLE, INC.
JBT

JOB NO: 256717
DESIGNED BY: WBN
CHECKED BY: JCR

SUMMARY OF DEAD & LIVE LOADINGS:

NON-COMPOSITE DEAD LOADS PER BEAM:

INT. SLAB $_{WEIGHT}$ =	0.850 klf
INT. COP $_{WEIGHT}$ =	0.107 klf
INT. SIP $_{WEIGHT}$ =	0.080 klf
INT. BEAM $_{WEIGHT}$ =	0.743 klf
TOTAL N-COMP. DL =	1.779 klf

SUPERIMPOSED DEAD LOADS PER BEAM:

LEFT BARRIER WEIGHT =	0.101 klf
LEFT FENCING WEIGHT =	0.000 klf
MEDIAN WEIGHT =	0.118 klf
RIGHT BARRIER WEIGHT =	0.101 klf
RIGHT FENCING WEIGHT =	0.000 klf
FWS WEIGHT =	0.255 klf
DECK OVERLAY WT. =	0.000 klf
UTILITY WEIGHT =	0.000 klf
TOTAL SUPERIMPOSED DL =	0.474 klf

LOADING RESULTS

	LOADING	REACTION	MOMENT
TOTAL N-COMP. DL =	1.779 klf	96.636 kips	2624.114 k-ft
TOTAL SUPERIMPOSED DL =	0.474 klf	25.743 kips	698.037 k-ft
TOTAL POINT DL =		8.014 kips	121.088 k-ft
TOTAL DL =	**2.253 klf**	**130.393 kips**	**3444.239 k-ft**
LEFT SW LL =	0.000 klf	0.000 kips	0.000 k-ft
RIGHT SW LL =	0.000 klf	0.000 kips	0.000 k-ft
TOTAL SW LL =	**0.000 klf**	**0.000 kips**	**0.000 k-ft**
MAX OF TRUCK OR LANE LL+I =		67.141 kips	1569.457 k-ft
TOTAL DL + SW LL + (LL + I) =		197.534 kips	5013.696 k-ft.

Description: BT 63 at 8.5ft
Design Span Length: 108.619 ft.
Span No.: 2

SUMMARY OF PROGRAM INPUT:

SIMPLE SPAN PROGRAM INPUT:

INTERIOR BEAM

LENGTH =	108.619 ft. ✓	$f'_{c\ beam}$ =	7000 psi
Moment Dist. Factor (DFM) =	1.545 ✓	$f'_{c\ slab}$ =	6500 psi
End Shear Dist. Factor (DFV) =	1.824 ✓	M_T =	0.242 k./in^2
LL Deflection Dist. Factor (DFD) =	0.875 ✓	M_B =	0.502 k./in^2
Non. Composite DL (W_{DLNC}) =	1.037 klf ✓	E_{beam} =	5.07 x 10^6 psi
Composite DL (W_{DLC}) =	0.474 klf ✓	E_{SLAB} =	3.59 x 10^6 psi
Sidewalk LL (W_{SWL}) =	0.000 klf		
Effective Concrete Width (W) =	102.00 in. ✓		
Concrete Slab Thickness (T$_s$) =	7.750 in. ✓		
Minimum Coping (Df) =	1.500 in. ✓		

P-LOADS:	P1	P2	P3	P4	P5
X	0.000 ft.	54.310 ft.	108.619 ft.	N/A	N/A
LOAD	5.785 kips	4.459 kips	5.785 kips	N/A	N/A
	✓	✓	✓		

CALCULATION SHEET

PROJECT: I-75 / I-575 NORTHWEST CORRIDOR
JOB NUMBER NH000-0073-03(242)
CALC NO. BR#32

SUBJECT: Beam Design Input - Span 3 SHEET NO.
BY: JCR DATE: 11/30/2009 SHEET REV.

Sufficient sample calculations representative of the scope and conditions in the design calculation were performed and the results compared to demonstrate the computer program adequacy.

BRIDGE: I-75 over Big Shanty Connector
COUNTY: COBB
P.I. NO: 714130
PROJECT: NH000-0073-03(242)

J.B. TRIMBLE, INC.

JOB NO: 255717
DESIGNED BY: WBN
CHECKED BY: JCR

Description: BT 63 at 8.5ft
Design Span Length: 47.440 ft.
Span No.: 3

✓ JCR 10-16-09

TYPICAL DECK SECTIONS

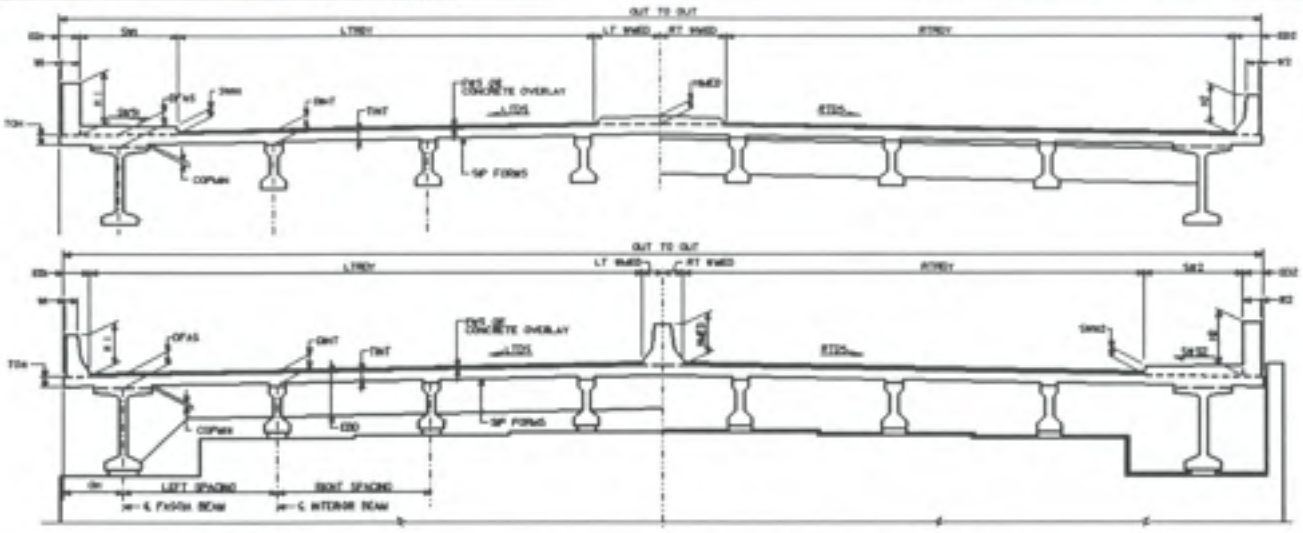

SECTION THRU EDGE BEAM

SECTION THRU ENDWALL

Description: BT 63 at 8.5ft
Design Span Length: 47.440 ft.
Span No.: 3

NON-COMPOSITE DEAD LOADS PER BEAM:

SLAB:

D_{INT} =	10 in.
T_{INT} =	8 in.
INTEGRAL WEARING SURFACE THICKNESS =	0.25 in.
DESIGN T_{INT} =	7.75 in.
INT. COP_{MIN} =	1.5 in.
INT. COP_{MAX} =	2 in.
INT. COP. DEPTH DESIGN METHOD:	Average Coping
INT. COP_{WIDTH} =	42 in.
AVG. INT. COP DEPTH =	1.75 in.
SIP FORMS:	Yes
SLAB $CONC._{WEIGHT}$ =	0.150 k/ft^3
BEAM $CONC._{WEIGHT}$ =	0.150 k/ft^3

INT. $SLAB_{WEIGHT}$ =	0.850 kf
INTEGRAL WEARING $SURFACE_{WEIGHT}$ =	0.027 kf
INT. COP_{WEIGHT} =	0.077 kf
INT. SIP_{WEIGHT} =	0.080 kf
INT. $BEAM_{WEIGHT}$ =	0.743 kf
NON-COMPOSITE DEAD LOAD PER BEAM =	1.749 kf

INTERIOR BEAM PROPERTIES:

INT. BEAM TYPE: Bulb Tee Type 63

Top Flange Width =	42 in.
Beam Depth =	63 in.
Web Thickness =	6 in.
H_1 =	3.5 in.
F_1 =	2.43 in.
H_2 =	6 in.
W_2 =	26 in.
F_2 =	4.5 in.
E.B. Depth (no coping) =	52.5 in.
Diaphragm Height =	55 in.
Cross Sectional Area =	713 in^2
A1 =	49 in^2
A2 =	22.5 in^2
AB =	226 in^2
INT. $BEAM_{WEIGHT}$ =	0.743 kf

CONCRETE STRENGTHS:

$f'_{c\ BEAM}$ =	5000 psi
$f'_{c\ SIP}$ =	4500 psi
$f'_{c\ SLAB}$ =	3500 psi
SIT =	0.201 k / in^2
SFB =	0.424 k / in^2

TYPE OF STRANDS = 0.5 in. dia. low-relax
DRAPED STRANDS ? No

STRAND AREA = 0.167 sq. in.
RB_{EQ} = 0.75
RT_{EQ} = 0.22

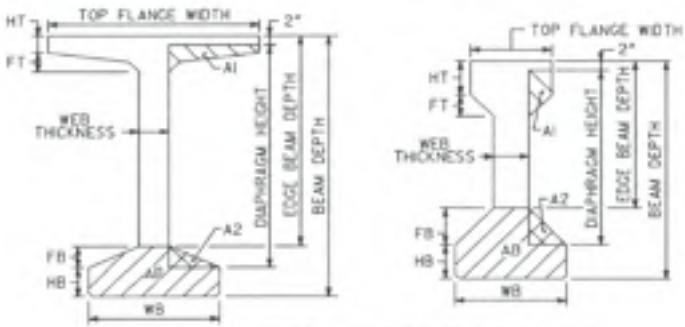

DEFINITION OF BEAM AREAS FOR EB. & DIAPH. CALCS

BRIDGE: I-75 over Big Shanty Connector
COUNTY: Cobb
P.I. NO: 714130
PROJECT: NH000-0073-03(242)
Description: BT 63 at 8.5ft
Design Span Length: 47.440 ft.
Span No.: 3

J.B. TRIMBLE, INC.

JOB NO: 255717
DESIGNED BY: WBN
CHECKED BY: JCR

EW-, DIAPH., EDGE BEAM DIMENSIONS & CALCS:

SPAN TYPE:	End Span
	Endwall 1:
EW. TYPE:	Expansion
INT. EW. WIDTH =	1.50 ft.
INT. EW. HEIGHT =	5.67 ft.
BM. EMBED. FOR EW. =	7 in.
PAV. REST WIDTH =	8 in.
INT. EW. WEIGHT =	11.681 kips
DIAPH. WIDTH =	10 in.
DIAPH. HEIGHT =	55 in.
INT. DIAPH. WEIGHT =	4.459 kips
INT. EB. HEIGHT =	54.5 in.
INT. EB. WIDTH =	12 in.
BM. EMBED. FOR EB. =	7 in.
INT. EB. WEIGHT =	5.635 kips

DIAPHRAGMS: 1

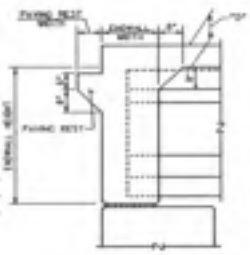

SECTION AT ENDWALL

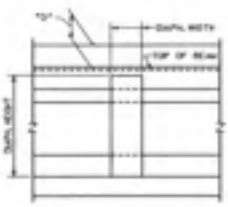

SECTION THRU DIAPHRAGM

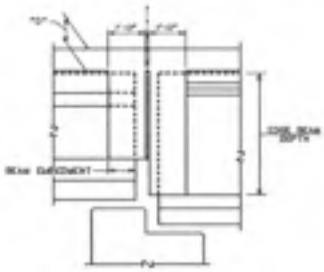

SECTION THRU EDGE BEAM

INT. P-LOADS	LOAD	POSITION	REACTION	MOMENT
EW. =	11.681 kips	0.00 ft.	11.681 kips	0.000 k-ft.
DIAPH. =	4.459 kips	23.72 ft.	2.230 kips	52.886 k-ft.
DIAPH. =	N/A	N/A	N/A	N/A
DIAPH. =	N/A	N/A	N/A	N/A
EB. =	5.635 kips	47.44 ft.	0.000 kips	0.000 k-ft.
TOTAL POINT DEAD LOAD PER BEAM =			13.910 kips	52.886 k-ft.

DECK SECTION DIMENSIONS & CALCS:

LEFT BARRIER

BARRIER TYPE: Jersey Barrier
FENCING OPTION: None
ED_1 = 1.625 ft.
W_1 = 0.75 ft.
H_1 = 2.667 ft.
LTDS = 2.0000 %

MEDIAN

MEDIAN TYPE: HOV Barrier

EXISTING RIGHT BARRIER

BARRIER TYPE: Jersey Barrier
FENCING OPTION: None
ED_2 = 1.625 ft.
W_2 = 0.75 ft.
H_2 = 2.667 ft.
RTDS = 2.0000 %

		IS MEDIAN BARRIER CENTERED?	No	
		OFFSET TO LEFT OR RIGHT?	Left	
BRIDGE TYPE =	Bridge Widening	OFFSET DISTANCE =	15 ft.	
SPAN LENGTH =	47.440 ft.			
SKEW ANGLE =	77.5554 degrees			
LEFT SPACING =	8.5 ft.	WIDENED BRIDGE OUT TO OUT =	27.125 ft.	NOTE: BRIDGE WIDENING IS TO ONE SIDE ONLY !
RIGHT SPACING =	8.5 ft.	EXISTING BRIDGE OUT TO OUT =	60.125 ft.	
LEFT OVERHANG =	3.875 ft.	FINISHED BRIDGE OUT TO OUT =	87.250 ft.	
LEFT OFFSET TO BARRIER =	1.5 in.	Ignore Median only for RDWY Width Calculations = Yes		Width of Median = 2 ft.
RIGHT OFFSET TO BARRIER =	1.5 in.			
SPACING TO SET BEAM =	6.25 ft.	LT RDWY =	26.000 ft.	
NO. OF NEW BEAMS =	3 beams	RT RDWY =	56.000 ft.	
NO. OF BEAMS IN EXISTING BRIDGE =	9 beams			
NO. OF SET BEAMS W/ COMP. LOADS =	1 beams	TOTAL WIDENED RDWY WIDTH =	84.000 ft.	Including median width
TOTAL NO. OF BEAMS SUPPORTING WIDENING =	4 beams			
NO. OF NEW BAYS =	3 bays			

Description: BT 63 at 8.5ft
Design Span Length: 47.440 ft.
Span No.: 3

SUPERIMPOSED DEAD LOADS:

LEFT BARRIER

BARRIER WEIGHT = 0.405 klf
FENCING WEIGHT = 0.000 klf

MEDIAN

MEDIAN WEIGHT = 0.472 klf

NOTE: BARRIER WEIGHT INCLUDES SIDEWALK WEIGHT, IF PRESENT

RIGHT BARRIER

BARRIER WEIGHT = 0.405 klf
FENCING WEIGHT = 0.000 klf

FWS DESIGN METHOD: Avg. Beam Sp.
WEIGHT OF FWS = 30 lb/sf

DECK OVERLAY: No
AVG. THICKNESS = 0 in.

OUT TO OUT DIST. GREATER THAN 66'-5, DISTRIBUTE BARRIER DL wt. wt. ONTO OUTER BEAMS!

BEAM ON CENTERLINE ? Yes

DIST. MEDIAN AND/OR BARR. TO ALL BEAMS ? No

OVERRIDE NO. OF BM. TO DIST. LT BARRIER ? No
NO. OF BEAMS DIST. TO LT BARRIER = 4 beams

BEAMS SUPPORTING LT BARRIER
BM 1 - BM 4

OVERRIDE NO. OF BM. TO DIST. MED. BARRIER ? Yes
NO. OF BEAMS DIST. TO MED. BARRIER = 4 beams

BEAMS SUPPORTING MED BARRIER
BM 3 - BM 6

OVERRIDE NO. OF BM. TO DIST. RT BARRIER ? No
NO. OF BEAMS DIST. TO RT BARRIER = 4 beams

BEAMS SUPPORTING RT BARRIER
BM 1 - BM 4

SUPERIMPOSED LOADS PER BRIDGE:

FWS WEIGHT = 2.520 klf per bridge
DECK OVERLAY WT. = 0.000 klf per bridge
UTILITY WEIGHT TO SUPERSTRUCTURE = 0.000 klf per bridge
TOTAL SUPERIMPOSED DEAD LOAD = 3.802 klf per bridge

SUPERIMPOSED LOADS PER BEAM:

FWS WEIGHT = 0.255 klf per beam
DECK OVERLAY WT. = 0.000 klf per beam
UTILITY WEIGHT TO SUPERSTRUCTURE = 0.000 klf per beam

LT BARRIER DEAD LOAD = 0.101 klf per beam
MED. BARRIER DEAD LOAD = 0.118 klf per beam
RT BARRIER DEAD LOAD = 0.101 klf per beam
DOUBLE LOADING DEAD LOAD = 0.219 klf per beam

DOUBLE LOADING GOVERNS DESIGN

CONTROLLING SUPERIMPOSED DEAD LOAD = 0.474 klf per beam

BRIDGE CONFIGURATION OVERLAPS BARRIER AND / OR MEDIAN LOADS, CREATING WORST BEAM LOADING CASE

DOUBLED LOADING CASES

	BARRIER ONLY	RAISED MEDIAN	MED. BAR.
WITHOUT OVERRIDE	0.202 klf per beam	0.359 klf per beam	0.219 klf per beam
WITH OVERRIDE	0.202 klf per beam	0.359 klf per beam	0.219 klf per beam

BRIDGE: I-75 over Big Shanty Connector
COUNTY: COBB
P.I. NO: 714130
PROJECT: NH000-0073-03(242)

J.B. TRIMBLE, INC.

JOB NO: 25ST17
DESIGNED BY: WBN
CHECKED BY: JCR

COMPOSITE SECTION MODULUS CALC:

SPAN LENGTH = 47.440 ft.

BEAM MOMENT OF INERTIA =	392,516 in^4	
BEAM Y_{bb} =	32.12 in.	
INT. COP_{adj} =	1.5 in.	
DESIGN T_{ALT} =	7.75 in.	
E_{DW} =	4.29 x 10^6 psi	
E_{SLAB} =	3.59 x 10^6 psi	
modular ratio =	1.19	

AASHTO 8.10.1.1 - Compression Flange Width

wBM FLANGE =	42.00	in.
B_{eff} = Bm Spacing =	**102.00**	**in. CONTROLS**
B_{eff} = ¼ Span Length =	142.32	in.
B_{eff} = WBM FLANGE + 2[6 tSLAB] =	138.00	in.
Add. Non-Comp. DL (WDLNC) =	0.000 kf	(T-Beam Only)
Y_c =	49.57 in.	
COMPOSITE MOM. OF INERTIA =	846,867 in^4	

COMPOSITE SECTION MODULI:

SECTION MOD. AT TOP OF SLAB =	37,337 in^3
SECTION MOD. AT TOP OF BEAM =	63,051 in^3
SECTION MOD. AT BOT. OF BEAM =	17,085 in^3

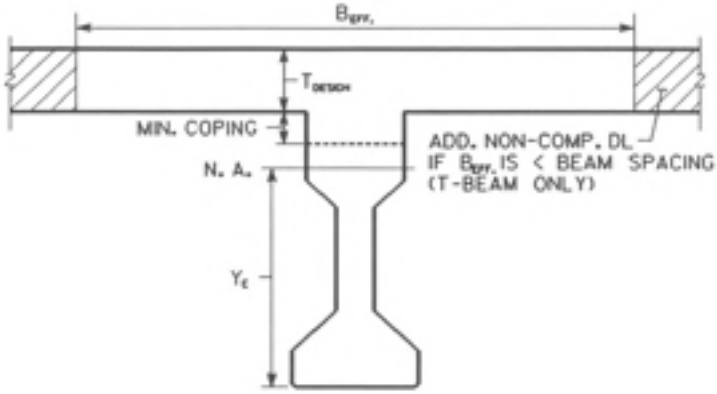

Description: GT 63 at 8.5ft
Design Span Length: 47.440 ft.
Span No.: 3

DISTRIBUTION & DEFLECTION FACTOR CALCS:

DISTRIBUTION FACTOR CALCS:

MOMENT	1.545	WHEEL
	0.773	AXLE
SHEAR	1.824	WHEEL
	0.912	AXLE

(AASHTO 4.7.3) =

DEFLECTION FACTOR CALCS:

ALLOW USER TO DEFINE NO. OF LANES ?	Yes	
USER DEFINED NO. OF LANES =	7	8.5 ft.
		8.5 ft.
ALLOW USER TO DEFINE NO. OF BEAMS ?	Yes	
USER DEFINED NO. OF BEAMS =	12	-> 12 beams will be used for DFD calcs.
REDUCTION FACTOR =	0.75	
DFD =	0.875	

LIVE LOAD CALCS:

LEFT SIDEWALK LIVE LOAD:

		REACTION	MOMENT
SW_L =	0 ft.	0.00 kips	0.000 k-ft.
LEFT SW. LL. =	0.060 kips / ft^2		
SW LL PER BEAM =	0.000 kf		

RIGHT SIDEWALK LIVE LOAD:

		REACTION	MOMENT
SW_L =	0 ft.	0.00 kips	0.000 k-ft.
RIGHT SW. LL. =	0.060 kips / ft^2		
SW LL PER BEAM =	0.000 kf		

IMPACT FACTOR: 1.29

HS 20 LOADING:

			REACTION	R x DF x I
MIDSPAN:	570.500 k-ft.	TRUCK:	57.778 kips	63.388 kips
MAX:	578.796 k-ft.	LANE:	41.120 kips	45.712 kips

	REACTION	MOMENT
TOTAL LL+I =	63.388 kips	568.665 k-ft.
	MAX TOTAL LL+I =	**576.935 k-ft.**

BRIDGE: I-75 over Big Shanty Connector
COUNTY: COBB
P.I. NO: 714130
PROJECT: NH000-0073-03(242)

J.B. TRIMBLE, INC.

JOB NO: 25S17
DESIGNED BY: WBN
CHECKED BY: JCR

SUMMARY OF DEAD & LIVE LOADINGS:

NON-COMPOSITE DEAD LOADS PER BEAM:

INT. SLAB $_{WEIGHT}$ =	0.850 k/f
INT. COP $_{WEIGHT}$ =	0.077 k/f
INT. SIP $_{WEIGHT}$ =	0.080 k/f
INT. BEAM $_{WEIGHT}$ =	0.743 k/f
TOTAL N-COMP. DL =	1.749 k/f

SUPERIMPOSED DEAD LOADS PER BEAM:

LEFT BARRIER WEIGHT =	0.101 k/f
LEFT FENCING WEIGHT =	0.000 k/f
MEDIAN WEIGHT =	0.118 k/f
RIGHT BARRIER WEIGHT =	0.101 k/f
RIGHT FENCING WEIGHT =	0.000 k/f
FWS WEIGHT =	0.255 k/f
DECK OVERLAY WT. =	0.000 k/f
UTILITY WEIGHT =	0.000 k/f
TOTAL SUPERIMPOSED DL =	0.474 k/f

LOADING RESULTS

	LOADING	REACTION	MOMENT
TOTAL N-COMP. DL =	1.749 k/f	41.493 kips	492.103 k-ft
TOTAL SUPERIMPOSED DL =	0.474 k/f	11.243 kips	133.345 k-ft
TOTAL POINT DL =		13.910 kips	52.886 k-ft
TOTAL DL =	**2.223 k/f**	**66.646 kips**	**678.335 k-ft**
LEFT SW LL =	0.000 k/f	0.000 kips	0.000 k-ft
RIGHT SW LL =	0.000 k/f	0.000 kips	0.000 k-ft
TOTAL SW LL =	**0.000 k/f**	**0.000 kips**	**0.000 k-ft**
MAX OF TRUCK OR LANE LL+I =		63.388 kips	568.665 k-ft
TOTAL DL + SW LL + (LL + I) =		130.034 kips	1247.000 k-ft.

Description: BT 63 at 8.5ft
Design Span Length: 47.440 ft.
Span No.: 3

SUMMARY OF PROGRAM INPUT:

SIMPLE SPAN PROGRAM INPUT:

	INTERIOR BEAM				
LENGTH =	47.440 ft. ✓		$f'_{c\ beam}$ =	5000 psi	
Moment Dist. Factor (DFM) =	1.545 ✓		$f'_{c\ slab}$ =	4500 psi	
End Shear Dist. Factor (DFV) =	1.824 ✓		MT =	0.201 k / in^2	
LL Deflection Dist. Factor (DFD) =	0.875 ✓		MB =	0.424 k / in^2	
Non- Composite DL (W_{DLNC}) =	1.007 k/f ✓		E_{beam} =	4.29 x 10^6 psi	
Composite DL (W_{DLC}) =	0.474 k/f ✓		E_{DLslab} =	3.59 x 10^6 psi	
Sidewalk LL (W_{LLsw}) =	0.000 k/f				
Effective Concrete Width (W) =	102.00 in. ✓				
Concrete Slab Thickness (T) =	7.750 in. ✓				
Minimum Coping (Df) =	1.500 in. ✓				

P-LOADS:	P1	P2	P3	P4	P5
X	0.000 ft.	23.720 ft.	47.440 ft.	N/A	N/A
LOAD	11.681 kips	4.458 kips	5.635 kips	N/A	N/A
	✓	✓	✓		

CALCULATION COVER SHEET

PROJECT	JOB NO.	CALC NO.	SHEET
I-75 / I-575 NORTHWEST CORRIDOR	NH000-0073-03(242)	BR#32	1
SUBJECT	DISCIPLINE		
Beam Design Output	STRUCTURAL		

CALCULATION STATUS DESIGNATION	PRELIMINARY	CONFIRMED	SUPSEDED	VOIDED	INCOMPLETE
	☐	☐	☐	☐	X

COMPUTER PROGRAM/TYPE	SCP	MAINFRAME	PC	PROGRAM	VERSION/RELEASE NO.
	(X) YES ( ) NO	( )	(X)	GDOT BRPSBM1	06/26/2008

Note 1: Georgia Department of Transportation (GDOT) terminated Contract Number TOURDPPI60072 for its convenience the completion of all work under that contract and directed that the work with respect to these calculations be discontinued.
(a) These calculations were not completed at the time of GDOT's direction and the information contained herein is not and/or has not been fully verified or checked. These calculations are a work-in-progress and are presented only as such.
(b) Any user is cautioned that the use of these calculations and any related information or calculations, without access to factors and without proper regard for their purpose, could lead to erroneous conclusions.
(c) If any such calculations or any information contained herein is used in future work efforts or any follow on design work a complete confirmation of the information contained herein should be performed prior to any such use.
(d) GTP has no responsibility for the use of this information not under its direct control.

Beam design ouptput is included for spans 1, 2, and 3.

NO.	REASON FOR REVISION	TOTAL NO. OF SHEETS	LAST SHEET NO.	BY	CHECKED	APPROVED/ ACCEPTED	DATE
A	As per GDOT's termination for convenience direction	22	22	JCR			11/30/09

RECORD OF REVISIONS

CALCULATION SHEET

PROJECT: I-75 / I-575 NORTHWEST CORRIDOR
JOB NUMBER NH000-0073-03(242)
CALC NO. BR#32

SUBJECT: Beam Design Output - Span 1
BY: JCR DATE: 11/30/2009

SHEET NO.
SHEET REV.

Sufficient sample calculations representative of the scope and conditions in the design calculation were performed and the results compared to demonstrate the computer program adequacy.

GEORGIA DEPARTMENT OF TRANSPORTATION
PRECONSTUCTION DIVISION - OFFICE OF BRIDGE & STRUCTURAL DESIGN
THE ANALYSIS OR DESIGN OF SIMPLE SPAN PRESTRESSED BEAMS
REVISED: JUNE 26, 2008

PROB. NO. INT.

✓ JCR 10-16-09

255717 I-75 over Big Shanty Connector Span 1

SPAN DATA

D/A	LL CLASS	LL SK.	LENGTH	DFM	DFV	DFD	WDLNC	WDLC	WSWK	F'C	F'CI	NFL	SIT	SFB	SFTE
D	HS20	0 0 0	39.440	1.545	1.824	0.875	1.007	0.474	0.000	5.000	4.500	3	-0.201	-0.424	-0.001

BEAM DATA

BEAM DIMENSIONS								* COMPOSITE SLAB			* (E X 1,000,000)		* STIRRUP	DECK	
WT	HT	FT	WS	HB	WB	FB	DB	* WF	TF	DF	* E BEAM	E SLAB	* SIZE	PANEL	FSY
42.00	3.50	2.43	6.00	6.00	26.00	4.50	63.00	102.00	7.750	1.500	4.29	3.59	5	0	60.

STRAND DATA

TYPE	NST	XDIST	ACTUAL NO. OR MAX. NO. OF STRANDS PER ROW																		ASB	AST	DIAM	TCL	BCL	SPAC.
0	4	0.5830	10	10	6	4	2	2	2	2	2	2	2	2	2	2	2	2	2	2	0.1670	0.1670	0.500	2.50	2.50	2.00

RBFPU	BFPU	IBLOSS	FBLOSS	RTFPU	TFPU	ITLOSS	FTLOSS	WTC	LOW LAX	ITLENGTH	FTLENGTH	DLENGTH
.75	270.00	0.00	0.00	.22	270.00	0.00	0.00	.150	1	0.00	0.00	0.00

DEBONDING DATA

DEBOND ACT. # AND LENGTH OR MAX. # AND LENGTH OF STRANDS DEBONDED PER ROW

0 0 .00

0 .00 0 .00

DRAPE DATA

DRAPED	MAX RAISE	HOLD DOWN PT.	ACT. # OR MAX. # OF STRANDS DRAPED PER ROW																		
0	0.00	.50	0	0	0	0	0	0	0	0	0	0	0	0	0	0	0	0	0	0	0

P-LOADS

XP1	P1	XP2	P2	XP3	P3	XP4	P4	XP5	P5
0.000	11.681	19.720	4.459	39.440	5.635				

MOMENTS AT SPAN TWENTIETH POINTS - KIP-FEET

LOADS	BRNG	0.05 L	0.10 L	0.15 L	0.20 L	0.25 L	0.30 L	0.35 L	0.40 L	0.45 L	0.50 L
UNIFORM D.L. BEAM	0.000	27.428	51.969	73.623	92.390	108.269	121.262	131.367	138.585	142.915	144.359
UNIFORM D.L. NON-C.	0.000	37.202	70.488	99.858	125.312	146.850	164.472	178.178	187.968	193.842	195.800
CONCENTRATED P-LOADS	0.000	4.397	8.793	13.190	17.586	21.983	26.379	30.776	35.173	39.569	43.966
UNIFORM D.L. COMP.	0.000	17.511	33.179	47.004	58.985	69.123	77.418	83.869	88.478	91.243	92.164
LIVE LOAD + IMPACT	0.000	101.715	189.172	262.369	321.309	365.989	397.355	419.220	436.972	441.489	431.747
TOTAL D.L. + L.L.	0.000	188.253	353.601	496.044	615.582	712.214	786.886	843.411	887.175	909.058	908.036

STRESSES AT SPAN TWENTIETH POINTS - KIPS PER SQ.IN.

LOADS		BRNG	0.05 L	0.10 L	0.15 L	0.20 L	0.25 L	0.30 L	0.35 L	0.40 L	0.45 L	0.50 L
UNIFORM D.L. BEAM	TOP	0.000	0.026	0.049	0.070	0.087	0.102	0.114	0.124	0.131	0.135	0.136
	BOT	0.000	-0.027	-0.051	-0.072	-0.091	-0.106	-0.119	-0.129	-0.136	-0.140	-0.142
TOTAL NONCOMP. D.L.	TOP	0.000	0.065	0.124	0.176	0.222	0.262	0.295	0.321	0.342	0.355	0.363
	BOT	0.000	-0.068	-0.129	-0.183	-0.231	-0.272	-0.306	-0.334	-0.355	-0.369	-0.377
TOTAL COMP.D.L.+L.L.	TOP	0.000	0.023	0.042	0.059	0.072	0.083	0.090	0.096	0.100	0.101	0.100
	BOT	0.000	-0.084	-0.156	-0.217	-0.267	-0.306	-0.333	-0.353	-0.369	-0.374	-0.368
TOTAL COMP.+NONCOMP.	TOP	0.000	0.088	0.166	0.235	0.295	0.344	0.385	0.417	0.442	0.457	0.462
	BOT	0.000	-0.151	-0.285	-0.401	-0.498	-0.578	-0.640	-0.687	-0.724	-0.744	-0.745

SHEARS AT SPAN TWENTIETH POINTS - KIPS

LOADS	BRNG	0.05 L	0.10 L	0.15 L	0.20 L	0.25 L	0.30 L	0.35 L	0.40 L	0.45 L	0.50 L
UNIFORM D.L. BEAM	14.641	13.177	11.713	10.249	8.785	7.320	5.856	4.392	2.928	1.464	0.000
UNIFORM D.L. NON-C.	19.858	17.872	15.886	13.901	11.915	9.929	7.943	5.957	3.972	1.986	0.000
CONCENTRATED P-LOADS	13.910	2.229	2.229	2.229	2.229	2.229	2.229	2.229	2.229	2.229	2.229
UNIFORM D.L. COMP.	9.347	8.413	7.478	6.543	5.608	4.674	3.739	2.804	1.869	0.935	0.000
LIVE LOAD + IMPACT	60.998	51.580	47.964	44.349	40.734	37.119	33.583	30.369	27.156	24.068	21.658
TOTAL D.L. + L.L.	118.755	93.271	85.271	77.271	69.271	61.271	53.351	45.753	38.155	30.682	23.887

BEAM PROPERTIES

NON-COMPOSITE BEAM PROPERTIES							COMPOSITE BEAM PROPERTIES						
I	YT	YB	ST	SB	A	W	I	YT	YB	ST	SB	A	QS
392552.9	30.886	32.114	12709.8	12223.6	712.74	0.742	846968.3	13.431	49.569	63059.8	17086.7	1374.25	12440.56

STRAND AND MISC. DATA

MAX # STRDS	ACT # STRDS	MIN # STRDS	E @ C.L.	E @ END	PS	ASE	NS(EACT-EEND)	BPI	BPF	TPI	TPF
52	12	12	22.196	22.196	0.261	0.60	0.000	260.232	232.194	38.167	34.055

MOMENTS(K-FT.) AND SHEARS(KIPS), STIRRUP SPACING, STRESSES(KSI) AT SPAN TWENTIETH POINTS

LOADS	BRNG	0.05 L	0.10 L	0.15 L	0.20 L	0.25 L	0.30 L	0.35 L	0.40 L	0.45 L	0.50 L
ULT. MOMENT REQD.	0.000	332.886	623.637	872.253	1078.734	1243.081	1367.340	1459.772	1532.052	1564.415	1554.642
ULT. MOMENT FURN.	195.662	851.530	1498.271	2135.973	2219.582	2219.582	2219.582	2219.582	2219.582	2219.582	2219.582
1.2*CRACKING MOMENT	1294.977	2337.560	2307.854	2281.395	2258.185	2238.222	2221.508	2208.041	2197.822	2190.852	2187.129
DIST. TO N.A.(IN.)	0.129	0.562	0.993	1.422	1.478	1.478	1.478	1.478	1.478	1.478	1.478
MAX STEEL RATIO	0.002	0.009	0.017	0.024	0.025	0.025	0.025	0.025	0.025	0.025	0.025
ULT. COMP. SHEAR	144.316	122.694	113.646	104.597	95.549	86.500	77.625	69.447	61.269	53.363	46.925
ULT. TOTAL SHEAR	207.249	165.956	152.423	138.890	125.356	111.823	98.463	85.800	73.137	60.746	49.824
BEAM SHEAR CAPACITY	95.858	108.857	112.319	115.373	118.021	120.261	122.093	105.591	85.597	69.353	56.404
MIN. STIRRUP AREA	0.431	0.242	0.183	0.125	0.068	0.060	0.060	0.060	0.060	0.060	0.060
STRP.(#5) SPAC.(IN.)	12.000*	24.000	24.000	24.000	24.000	24.000	24.000	24.000	24.000	24.000	24.000
PRESTRESS STRESS TOP	-0.024	-0.102	-0.102	-0.102	-0.102	-0.102	-0.102	-0.102	-0.102	-0.102	-0.102
BOT	0.228	0.960	0.960	0.960	0.960	0.960	0.960	0.960	0.960	0.960	0.960
INITIAL STRESSES TOP	-0.024	-0.077	-0.053	-0.033	-0.015	0.000	0.012	0.022	0.028	0.032	0.034
BOT	0.228	0.934	0.909	0.888	0.870	0.854	0.841	0.832	0.824	0.820	0.819
FINAL STRESSES TOP	-0.024	-0.004	0.075	0.144	0.203	0.253	0.294	0.326	0.350	0.365	0.371
BOT	0.228	0.706	0.572	0.456	0.359	0.279	0.217	0.170	0.133	0.113	0.112
FINAL # TOP STRANDS	1.062	4.000	4.000	4.000	4.000	4.000	4.000	4.000	4.000	4.000	4.000
FINAL # BOT STRANDS	2.124	8.000	8.000	8.000	8.000	8.000	8.000	8.000	8.000	8.000	8.000
DEVELOP. # TOP STRDS	0.345	1.512	2.679	3.846	4.000	4.000	4.000	4.000	4.000	4.000	4.000
DEVELOP. # BOT STRDS	0.690	3.024	5.358	7.692	8.000	8.000	8.000	8.000	8.000	8.000	8.000

* - "ASE" REQUIREMENTS ARE MET USING THIS SPACING

DEFLECTIONS(INCHES) AT CENTER LINE OF SPAN

BEAM	WDLNC	P-LOADS	WDLC	INITIAL	FINAL	SIDEWALK	TRUCK	LANE	MILITARY	RAILROAD	PRESTR.	CAMBER
0.024	0.033	0.006	0.007	-0.086	-0.029	0.000	0.018	0.012	0.016	0.000	-0.110	-0.160

MAXIMUM, ACTUAL AND MINIMUM ECCENTRICITIES(INCHES)AT SPAN TWENTIETH POINTS

ITEM	BRNG	0.05 L	0.10 L	0.15 L	0.20 L	0.25 L	0.30 L	0.35 L	0.40 L	0.45 L	0.50 L
MAX ECC, SIT= -201	53.969	27.497	28.484	29.354	30.109	30.748	31.270	31.676	31.967	32.141	32.199
MAX ECC, SIB= 2700	449.698	94.556	95.543	96.414	97.168	97.807	98.329	98.736	99.026	99.200	99.258
INITIAL ECCENTRICITY	22.196	22.196	22.196	22.196	22.196	22.196	22.196	22.196	22.196	22.196	22.196
FINAL ECCENTRICITY	22.196	22.196	22.196	22.196	22.196	22.196	22.196	22.196	22.196	22.196	22.196
MIN ECC, SFT= 2000	-341.736	-73.447	-69.705	-66.417	-63.582	-61.199	-59.261	-57.732	-56.564	-55.840	-55.569
MIN ECC, SFB= -424	-90.463	-29.661	-23.531	-18.228	-13.750	-10.098	-7.241	-5.057	-3.371	-2.478	-2.411

STRAND ARRANGEMENT (TOP STRANDS NOT SHOWN)= 4

```
*  SPAN  *  *  *  *  *  *  *  *  *  *  *  *  *  *  *  *STRAND ARRANGEMENT (INCHES) *  *  *  *  *  *  *  *  *  *  *  *  *  *  *  *  *  *
                                 1 1 1 1 1 1 1 1 1 1 2 2 2 2 2 2 2 2 2 2 3 3 3 3 3 3 3 3 3 3 4 4 4 4 4 4 4 4 4 4 5 5 5 5 5 5 5 5 5 5 6
* POINTS *0.1.2.3.4.5.6.7.8.9.0.1.2.3.4.5.6.7.8.9.0.1.2.3.4.5.6.7.8.9.0.1.2.3.4.5.6.7.8.9.0.1.2.3.4.5.6.7.8.9.0.1.2.3.4.5.6.7.8.9.0

*  END   *     +
*  BRNG  *     +

* 0.05 L *     +

* 0.10 L *     +

* 0.15 L *     +

* 0.20 L *     +

* 0.25 L *     +

* 0.30 L *     +

* 0.35 L *     +

* 0.40 L *     +

* 0.45 L *     +

* 0.50 L *     +
```

FINAL STRAND ARRANGEMENT AT END

ROW	TOTAL #STRDS	VER DIST-STRAIGHT STRDS	#RAISED STRDS	VER DIST-RAISED STRDS	#DEB 1	DEB LENGTH 1	#DEB 2	DEB LENGTH 2
1	8	2.500	0	0.000	0	0.00L	0	0.00L
TOP	4	60.500						

INITIAL TRANSFER LENGTH = 2.461 FT

FINAL TRANSFER LENGTH = 2.196 FT

DEVELOPMENT LENGTH = 6.760 FT

LOSSES (KSI)

TOP STRANDS INITIAL LOSSES= 2.263 TOP STRANDS ADDITIONAL LOSSES= 6.156 TOP STRANDS FINAL LOSSES= 8.419

BOT STRANDS INITIAL LOSSES= 7.716 BOT STRANDS ADDITIONAL LOSSES= 20.986 BOT STRANDS FINAL LOSSES= 28.702

TOTAL LOSSES FOR ALL STRANDS= 21.941

CALCULATION SHEET

PROJECT: I-75 / I-575 NORTHWEST CORRIDOR
JOB NUMBER NH000-0073-03(242)
CALC NO. BR#32

SUBJECT: Beam Design Output - Span 2
BY: JCR DATE: 11/30/2009

SHEET NO.
SHEET REV.

Sufficient sample calculations representative of the scope and conditions in the design calculation were performed and the results compared to demonstrate the computer program adequacy.

GEORGIA DEPARTMENT OF TRANSPORTATION
PRECONSTUCTION DIVISION - OFFICE OF BRIDGE & STRUCTURAL DESIGN
THE ANALYSIS OR DESIGN OF SIMPLE SPAN PRESTRESSED BEAMS
REVISED: JUNE 26, 2008

255717 I-75 over Big Shanty Connector Span 2

✓ JCR 10-16-09

SPAN DATA

D/A	LL CLASS	LL SK.	LENGTH	DFM	DFV	DFD	WDLNC	WDLC	WSWK	F'C	F'CI	NPL	SIT	SFB	SFTE
D	HS20	0 0 0	108.619	1.545	1.824	0.875	1.037	0.474	0.000	7.000	6.500	3	-0.242	-0.502	-0.001

BEAM DATA

BEAM DIMENSIONS								* COMPOSITE SLAB			* (E X 1,000,000)		* STIRRUP	DECK	
WT	HT	FT	WS	HB	WB	FB	DB	* WF	TF	DF	* E BEAM	E SLAB	* SIZE	PANEL	FSY
42.00	3.50	2.43	6.00	6.00	26.00	4.50	63.00	102.00	7.750	1.500	5.07	3.59	5	0	60.

STRAND DATA

TYPE	NST	XDIST	ACTUAL NO. OR MAX. NO. OF STRANDS PER ROW																	ASB	AST	DIAM	TCL	BCL	SPAC.
0	4	0.5830	12	12	8	4	2	2	2	2	2	2	2	2	2	2	2	2	2	0.1670	0.1670	0.500	2.50	2.50	2.00

RBFPU	BFPU	IBLOSS	FBLOSS	RTFPU	TFPU	ITLOSS	FTLOSS	WTC	LOW LAX	ITLENGTH	FTLENGTH	DLENGTH
.75	270.00	0.00	0.00	.22	270.00	0.00	0.00	.150	1	0.00	0.00	0.00

DEBONDING DATA

DEBOND ACT. # AND LENGTH OR MAX. # AND LENGTH OF STRANDS DEBONDED PER ROW

0 0 .00

0 .00 0 .00

DRAPE DATA

DRAPED	MAX RAISE	HOLD DOWN PT.	ACT. # OR MAX. # OF STRANDS DRAPED PER ROW																			
1	0.00	.50	2	2	2	2	2	2	2	2	2	2	2	2	2	2	2	0	0	0	0	

P-LOADS

XP1	P1	XP2	P2	XP3	P3	XP4	P4	XP5	P5
0.000	5.785	54.310	4.459	108.619	5.785				

MOMENTS AT SPAN TWENTIETH POINTS - KIP-FEET

LOADS	BRNG	0.05 L	0.10 L	0.15 L	0.20 L	0.25 L	0.30 L	0.35 L	0.40 L	0.45 L	0.50 L
UNIFORM D.L. BEAM	0.000	208.034	394.170	558.408	700.747	821.188	919.731	996.375	1051.121	1083.969	1094.918
UNIFORM D.L. NON-C.	0.000	290.572	550.558	779.957	978.769	1146.995	1284.635	1391.688	1468.154	1514.034	1529.327
CONCENTRATED P-LOADS	0.000	12.108	24.216	36.325	48.433	60.541	72.649	84.757	96.866	108.974	121.082
UNIFORM D.L. COMP.	0.000	132.817	251.653	356.509	447.384	524.278	587.191	636.123	671.075	692.046	699.037
LIVE LOAD + IMPACT	0.000	316.872	597.073	840.601	1047.458	1217.642	1351.155	1453.247	1529.171	1568.424	1571.004
TOTAL D.L. + L.L.	0.000	960.404	1817.670	2571.799	3222.791	3770.644	4215.360	4562.191	4816.387	4967.446	5015.368

STRESSES AT SPAN TWENTIETH POINTS - KIPS PER SQ.IN.

LOADS		BRNG	0.05 L	0.10 L	0.15 L	0.20 L	0.25 L	0.30 L	0.35 L	0.40 L	0.45 L	0.50 L
UNIFORM D.L. BEAM	TOP	0.000	0.196	0.372	0.527	0.662	0.775	0.868	0.941	0.992	1.023	1.034
	BOT	0.000	-0.204	-0.387	-0.548	-0.688	-0.806	-0.903	-0.978	-1.032	-1.064	-1.075
TOTAL NONCOMP. D.L.	TOP	0.000	0.482	0.915	1.298	1.631	1.915	2.150	2.335	2.470	2.556	2.592
	BOT	0.000	-0.501	-0.951	-1.350	-1.696	-1.992	-2.235	-2.428	-2.568	-2.657	-2.695
TOTAL COMP.D.L.+L.L.	TOP	0.000	0.100	0.188	0.266	0.332	0.387	0.430	0.464	0.488	0.502	0.504
	BOT	0.000	-0.321	-0.606	-0.855	-1.068	-1.244	-1.384	-1.492	-1.571	-1.614	-1.621
TOTAL COMP.+NONCOMP.	TOP	0.000	0.582	1.103	1.564	1.963	2.302	2.580	2.798	2.958	3.057	3.096
	BOT	0.000	-0.823	-1.557	-2.205	-2.764	-3.236	-3.620	-3.920	-4.140	-4.272	-4.316

SHEARS AT SPAN TWENTIETH POINTS - KIPS

LOADS	BRNG	0.05 L	0.10 L	0.15 L	0.20 L	0.25 L	0.30 L	0.35 L	0.40 L	0.45 L	0.50 L
UNIFORM D.L. BEAM	40.321	36.289	32.257	28.225	24.193	20.161	16.129	12.096	8.064	4.032	0.000
UNIFORM D.L. NON-C.	56.319	50.687	45.055	39.423	33.791	28.159	22.528	16.896	11.264	5.632	0.000
CONCENTRATED P-LOADS	8.014	2.229	2.229	2.229	2.229	2.229	2.229	2.229	2.229	2.229	2.229
UNIFORM D.L. COMP.	25.743	23.168	20.594	18.020	15.446	12.871	10.297	7.723	5.149	2.574	0.000
LIVE LOAD + IMPACT	67.141	58.590	55.442	52.275	49.089	45.881	42.650	39.394	36.110	32.798	29.453
TOTAL D.L. + L.L.	197.539	170.965	155.578	140.173	124.748	109.302	93.832	78.338	62.816	47.265	31.682

BEAM PROPERTIES

* NON-COMPOSITE BEAM PROPERTIES *							* COMPOSITE BEAM PROPERTIES *						
I	YT	YB	ST	SB	A	W	* I	YT	YB	ST	SB	A	QS
392552.9	30.886	32.114	12709.8	12223.6	712.74	0.742	* 807586.4	14.935	48.065	54072.3	16802.1	1272.48	11348.54

STRAND AND MISC. DATA

MAX # STRDS	ACT # STRDS	MIN # STRDS	E @ C.L.	E @ END	PS	ASE	NS(EACT-EEND)	BPI	BPF	TPI	TPF
54	50	44	23.932	16.682	1.176	2.87	362.493	1398.202	1107.197	35.664	28.242

MOMENTS(K-FT.) AND SHEARS(KIPS), STIRRUP SPACING, STRESSES(KSI) AT SPAN TWENTIETH POINTS

LOADS		BRNG	0.05 L	0.10 L	0.15 L	0.20 L	0.25 L	0.30 L	0.35 L	0.40 L	0.45 L	0.50 L
ULT. MOMENT REQD.		0.000	1523.158	2880.454	4071.888	5097.459	5957.167	6651.014	7190.377	7586.636	7817.033	7881.567
ULT. MOMENT FURN.		846.038	8308.720	9687.132	9827.821	9968.521	10109.231	10249.952	10390.682	10531.421	10672.169	10672.169
1.2*CRACKING MOMENT		2623.616	6242.633	6160.916	6102.787	6068.250	6057.302	6069.945	6106.177	6166.000	6249.414	6232.176
DIST. TO N.A.(IN.)		0.436	4.389	5.079	5.081	5.083	5.085	5.087	5.089	5.091	5.093	5.093
MAX STEEL RATIO		0.007	0.068	0.077	0.076	0.075	0.074	0.073	0.073	0.072	0.071	0.071
ULT. COMP. SHEAR		178.940	157.067	146.899	136.690	126.439	116.142	105.795	95.394	84.933	74.409	63.815
ULT. TOTAL SHEAR		314.992	273.034	250.303	227.531	204.717	181.857	158.946	135.982	112.958	89.871	66.714
BEAM SHEAR CAPACITY		130.938	222.147	243.689	263.382	202.425	152.553	117.995	91.875	70.708	54.675	54.675
MIN. STIRRUP AREA		0.770	0.282	0.118	0.060	0.083	0.163	0.190	0.190	0.173	0.141	0.061
STRP.(#5) SPAC.(IN.)		9.664*	24.000	24.000	24.000	24.000	24.000	24.000	24.000	24.000	24.000	24.000
PRESTRESS STRESS	TOP	0.028	0.030	-0.059	-0.149	-0.239	-0.329	-0.419	-0.509	-0.598	-0.688	-0.688
	BOT	0.934	4.072	4.165	4.259	4.352	4.446	4.539	4.632	4.726	4.819	4.819
INITIAL STRESSES	TOP	0.028	0.227	0.313	0.378	0.423	0.446	0.450	0.432	0.394	0.335	0.346
	BOT	0.934	3.868	3.778	3.711	3.664	3.639	3.636	3.654	3.694	3.755	3.744
FINAL STRESSES	TOP	0.028	0.606	1.056	1.445	1.774	2.042	2.248	2.396	2.485	2.513	2.551
	BOT	0.934	2.402	1.741	1.168	0.682	0.285	-0.025	-0.252	-0.398	-0.456	-0.500
FINAL # TOP STRANDS		1.186	4.000	4.000	4.000	4.000	4.000	4.000	4.000	4.000	4.000	4.000
FINAL # BOT STRANDS		13.637	46.000	46.000	46.000	46.000	46.000	46.000	46.000	46.000	46.000	46.000
DEVELOP. # TOP STRDS		0.334	3.442	4.000	4.000	4.000	4.000	4.000	4.000	4.000	4.000	4.000
DEVELOP. # BOT STRDS		3.837	39.586	46.000	46.000	46.000	46.000	46.000	46.000	46.000	46.000	46.000

* - FOR "ASE" REQUIREMENTS WITHIN A MAXIMUM DISTANCE OF 11.692" (D/4) FROM THE END OF BEAM USE EITHER
5 LOCATIONS OF 2-#5 STIRRUPS AT A MAXIMUM SPACING OF 2.473" OR
4 LOCATIONS OF 2-#6 STIRRUPS AT A MAXIMUM SPACING OF 3.297" USING 2" CL. FROM END OF BEAM

DEFLECTIONS(INCHES) AT CENTER LINE OF SPAN

BEAM	WDLNC	P-LOADS	WDLC	INITIAL	FINAL	SIDEWALK	TRUCK	LANE	MILITARY	RAILROAD	PRESTR.	CAMBER
1.168	1.632	0.103	0.363	-2.207	0.593	0.000	0.413	0.368	0.287	0.000	-3.375	-3.711

MAXIMUM, ACTUAL AND MINIMUM ECCENTRICITIES(INCHES)AT SPAN TWENTIETH POINTS

ITEM	BRNG	0.05 L	0.10 L	0.15 L	0.20 L	0.25 L	0.30 L	0.35 L	0.40 L	0.45 L	0.50 L
MAX ECC, SIT= -242	26.970	21.718	23.276	24.651	25.842	26.850	27.675	28.316	28.774	29.049	29.141
MAX ECC, SIB= 3900	124.478	17.838	19.396	20.770	21.962	22.970	23.794	24.436	24.894	25.169	25.260
INITIAL ECCENTRICITY	16.768	17.564	18.360	19.156	19.952	20.748	21.544	22.340	23.136	23.932	23.932
FINAL ECCENTRICITY	16.768	17.564	18.360	19.156	19.952	20.748	21.544	22.340	23.136	23.932	23.932
MIN ECC, SFT= 2800	-87.894	-6.996	-1.161	3.992	8.465	12.258	15.370	17.814	19.605	20.714	21.143
MIN ECC, SFB= -501	-35.380	-13.699	-5.769	1.178	7.201	12.279	16.414	19.644	22.012	23.435	23.913

STRAND ARRANGEMENT (TOP STRANDS NOT SHOWN)= 4

```
*  SPAN  *  *  *  *  *  *  *  *  *  *  *  *  *  *  *STRAND ARRANGEMENT (INCHES) *  *  *  *  *  *  *  *  *  *  *  *  *  *  *  *  *  *  *
                                 1 1 1 1 1 1 1 1 1 1 2 2 2 2 2 2 2 2 2 2 3 3 3 3 3 3 3 3 3 3 4 4 4 4 4 4 4 4 4 4 5 5 5 5 5 5 5 5 5 5 6
* POINTS *0.1.2.3.4.5.6.7.8.9.0.1.2.3.4.5.6.7.8.9.0.1.2.3.4.5.6.7.8.9.0.1.2.3.4.5.6.7.8.9.0.1.2.3.4.5.6.7.8.9.0.1.2.3.4.5.6.7.8.9.0

*  END   *     +   +   +   +                       R   R   R   R   R   R   R   R   R
*  BRNG  *     +   +   +   +                       R   R   R   R   R   R   R   R   R

* 0.05 L *     +   +   +   +                   R   R   R   R   R   R   R   R   R

* 0.10 L *     +   +   +   +               R   R   R   R   R   R   R   R   R

* 0.15 L *     +   +   +   +           R   R   R   R   R   R   R   R   R

* 0.20 L *     +   +   +   +       R   R   R   R   R   R   R   R   R

* 0.25 L *     +   +   +   +   R   R   R   R   R   R   R   R   R

* 0.30 L *     +   +   +   +R  R   R   R   R   R   R   R   R

* 0.35 L *     +   +   R   R   R   R   R   R   R   R   R

* 0.40 L *     +   R   R   R   R   R   R   R   R   R

* 0.45 L *     R   R   R   R   R   R   R   R   R

* 0.50 L *     R   R   R   R   R   R   R   R   R
```

FINAL STRAND ARRANGEMENT AT END

ROW	TOTAL #STRDS	VER DIST-STRAIGHT STRDS	#RAISED STRDS	VER DIST-RAISED STRDS	#DEB 1	DEB LENGTH 1	#DEB 2	DEB LENGTH 2
1	12	2.500	2	21.500	0	0.00L	0	0.00L
2	12	4.500	2	23.500	0	0.00L	0	0.00L
3	8	6.500	2	25.500	0	0.00L	0	0.00L
4	4	8.500	2	27.500	0	0.00L	0	0.00L
5	2	10.500	2	29.500	0	0.00L	0	0.00L
6	2	12.500	2	31.500	0	0.00L	0	0.00L
7	2	14.500	2	33.500	0	0.00L	0	0.00L
8	2	16.500	2	35.500	0	0.00L	0	0.00L
9	2	18.500	2	37.500	0	0.00L	0	0.00L
TOP	4	60.500						

INITIAL TRANSFER LENGTH = 2.483 FT

FINAL TRANSFER LENGTH = 1.967 FT

DEVELOPMENT LENGTH = 6.988 FT

LOSSES (KSI)

TOP STRANDS INITIAL LOSSES= 6.010 TOP STRANDS ADDITIONAL LOSSES= 11.112 TOP STRANDS FINAL LOSSES= 17.122

BOT STRANDS INITIAL LOSSES= 20.490 BOT STRANDS ADDITIONAL LOSSES= 37.881 BOT STRANDS FINAL LOSSES= 58.371

TOTAL LOSSES FOR ALL STRANDS= 55.071

CALCULATION SHEET

PROJECT: I-75 / I-575 NORTHWEST CORRIDOR
JOB NUMBER NH000-0073-03(242)
CALC NO. BR#32

SUBJECT: Beam Design Output - Span 3 SHEET NO.
BY: JCR DATE: 11/30/2009 SHEET REV.

Sufficient sample calculations representative of the scope and conditions in the design calculation were performed and the results compared to demonstrate the computer program adequacy.

GEORGIA DEPARTMENT OF TRANSPORTATION
PRECONSTUCTION DIVISION - OFFICE OF BRIDGE & STRUCTURAL DESIGN
THE ANALYSIS OR DESIGN OF SIMPLE SPAN PRESTRESSED BEAMS
REVISED: JUNE 26, 2008

PROB. NO. INT.

✓ JCR 10-16-09

255717 I-75 over Big Shanty Connector Span 3

SPAN DATA

D/A	LL CLASS	LL SK.	LENGTH	DFM	DFV	DFD	WDLNC	WDLC	WSWK	F'C	F'CI	NPL	SIT	SFB	SFTE
D	HS20	0 0 0	47.440	1.545	1.824	0.875	1.007	0.474	0.000	5.000	4.500	3	-0.201	-0.424	-0.001

BEAM DATA

BEAM DIMENSIONS								* COMPOSITE SLAB			* (E X 1,000,000)		* STIRRUP	DECK	
WT	HT	FT	WS	HB	WB	FB	DB	* WF	TF	DF	* E BEAM	E SLAB	* SIZE	PANEL	FSY
42.00	3.50	2.43	6.00	6.00	26.00	4.50	63.00	102.00	7.750	1.500	4.29	3.59	5	0	60.

STRAND DATA

TYPE	NST	XDIST	ACTUAL NO. OR MAX. NO. OF STRANDS PER ROW	ASB	AST	DIAM	TCL	BCL	SPAC.
0	4	0.5830	10 10 6 4 2 2 2 2 2 2 2 2 2 2 2 2 2 2 2 2	0.1670	0.1670	0.500	2.50	2.50	2.00

RBFPU	BFPU	IBLOSS	FBLOSS	RTFPU	TFPU	ITLOSS	FTLOSS	WTC	LOW LAX	ITLENGTH	FTLENGTH	DLENGTH
.75	270.00	0.00	0.00	.22	270.00	0.00	0.00	.150	1	0.00	0.00	0.00

DEBONDING DATA

DEBOND	ACT. # AND LENGTH OR MAX. # AND LENGTH OF STRANDS DEBONDED PER ROW
0	0 .00 0 .00 0 .00 0 .00 0 .00 0 .00 0 .00 0 .00 0 .00 0 .00 0 .00 0 .00 0 .00 0 .00 0 .00 0 .00 0 .00 0 .00 0 .00 0 .00
	0 .00 0 .00 0 .00 0 .00 0 .00 0 .00 0 .00 0 .00 0 .00 0 .00 0 .00 0 .00 0 .00 0 .00 0 .00 0 .00 0 .00 0 .00 0 .00 0 .00

DRAPE DATA

DRAPED	MAX RAISE	HOLD DOWN PT.	ACT. # OR MAX. # OF STRANDS DRAPED PER ROW
0	0.00	.50	0 0 0 0 0 0 0 0 0 0 0 0 0 0 0 0 0 0 0 0

P-LOADS

XP1	P1	XP2	P2	XP3	P3	XP4	P4	XP5	P5
0.000	11.681	23.720	4.459	47.440	5.635				

PRESTRESSED BEAM DESIGN - OUTPUT DATA FOR PROBLEM NO. INT. 255717 I-75 over Big Shanty Connector Span 3

MOMENTS AT SPAN TWENTIETH POINTS - KIP-FEET

LOADS	BRNG	0.05 L	0.10 L	0.15 L	0.20 L	0.25 L	0.30 L	0.35 L	0.40 L	0.45 L	0.50 L
UNIFORM D.L. BEAM	0.000	39.684	75.190	106.520	133.672	156.646	175.444	190.064	200.507	206.773	208.862
UNIFORM D.L. NON-C.	0.000	53.825	101.984	144.477	181.305	212.466	237.962	257.792	271.957	280.456	283.288
CONCENTRATED P-LOADS	0.000	5.288	10.577	15.865	21.153	26.442	31.730	37.019	42.307	47.595	52.884
UNIFORM D.L. COMP.	0.000	25.336	48.004	68.006	85.341	100.009	112.010	121.344	128.011	132.012	133.345
LIVE LOAD + IMPACT	0.000	128.193	239.368	333.525	410.663	470.782	513.883	545.546	571.351	580.138	571.906
TOTAL D.L. + L.L.	0.000	252.326	475.123	668.393	832.133	966.346	1071.030	1151.766	1214.134	1246.974	1250.285

STRESSES AT SPAN TWENTIETH POINTS - KIPS PER SQ.IN.

LOADS		BRNG	0.05 L	0.10 L	0.15 L	0.20 L	0.25 L	0.30 L	0.35 L	0.40 L	0.45 L	0.50 L
UNIFORM D.L. BEAM	TOP	0.000	0.037	0.071	0.101	0.126	0.148	0.166	0.179	0.189	0.195	0.197
	BOT	0.000	-0.039	-0.074	-0.105	-0.131	-0.154	-0.172	-0.187	-0.197	-0.203	-0.205
TOTAL NONCOMP. D.L.	TOP	0.000	0.093	0.177	0.252	0.317	0.373	0.420	0.458	0.486	0.505	0.515
	BOT	0.000	-0.097	-0.184	-0.262	-0.330	-0.388	-0.437	-0.476	-0.505	-0.525	-0.535
TOTAL COMP.D.L.+L.L.	TOP	0.000	0.029	0.055	0.076	0.094	0.109	0.119	0.127	0.133	0.136	0.134
	BOT	0.000	-0.108	-0.202	-0.282	-0.348	-0.401	-0.440	-0.468	-0.491	-0.500	-0.495
TOTAL COMP.+NONCOMP.	TOP	0.000	0.122	0.232	0.328	0.412	0.482	0.539	0.585	0.619	0.640	0.649
	BOT	0.000	-0.205	-0.386	-0.544	-0.678	-0.789	-0.877	-0.944	-0.997	-1.025	-1.030

SHEARS AT SPAN TWENTIETH POINTS - KIPS

LOADS	BRNG	0.05 L	0.10 L	0.15 L	0.20 L	0.25 L	0.30 L	0.35 L	0.40 L	0.45 L	0.50 L
UNIFORM D.L. BEAM	17.611	15.850	14.088	12.327	10.566	8.805	7.044	5.283	3.522	1.761	0.000
UNIFORM D.L. NON-C.	23.886	21.497	19.109	16.720	14.332	11.943	9.554	7.166	4.777	2.389	0.000
CONCENTRATED P-LOADS	13.910	2.229	2.229	2.229	2.229	2.229	2.229	2.229	2.229	2.229	2.229
UNIFORM D.L. COMP.	11.243	10.119	8.995	7.870	6.746	5.622	4.497	3.373	2.249	1.124	0.000
LIVE LOAD + IMPACT	63.390	54.214	50.778	47.235	43.619	40.004	36.389	32.773	29.158	25.866	22.652
TOTAL D.L. + L.L.	130.041	103.909	95.199	86.382	77.493	68.604	59.714	50.825	41.936	33.369	24.882

BEAM PROPERTIES

NON-COMPOSITE BEAM PROPERTIES							COMPOSITE BEAM PROPERTIES						
I	YT	YB	ST	SB	A	W	I	YT	YB	ST	SB	A	QS
392552.9	30.886	32.114	12709.8	12223.6	712.74	0.742	846968.3	13.431	49.569	63059.8	17086.7	1374.25	12440.56

STRAND AND MISC. DATA

MAX # STRDS	ACT # STRDS	MIN # STRDS	E @ C.L.	E @ END	PS	ASE	NS(EACT-EEND)	BPI	BPF	TPI	TPF
50	12	12	22.196	22.196	0.28%	0.60	0.000	260.626	234.465	38.225	34.388

MOMENTS(K-FT.) AND SHEARS(KIPS), STIRRUP SPACING, STRESSES(KSI) AT SPAN TWENTIETH POINTS

LOADS		BRNG	0.05 L	0.10 L	0.15 L	0.20 L	0.25 L	0.30 L	0.35 L	0.40 L	0.45 L	0.50 L
ULT. MOMENT REQD.		0.000	439.129	825.121	1157.976	1437.695	1664.276	1837.721	1970.120	2073.564	2123.871	2121.042
ULT. MOMENT FURN.		196.910	989.672	1769.086	2219.582	2219.582	2219.582	2219.582	2219.582	2219.582	2219.582	2219.582
1.2*CRACKING MOMENT		1294.977	2337.668	2295.201	2257.433	2224.363	2195.993	2172.322	2153.350	2139.078	2129.504	2124.630
DIST. TO N.A.(IN.)		0.129	0.654	1.175	1.478	1.478	1.478	1.478	1.478	1.478	1.478	1.478
MAX STEEL RATIO		0.002	0.011	0.020	0.025	0.025	0.025	0.025	0.025	0.025	0.025	0.025
ULT. COMP. SHEAR		151.964	130.620	121.714	112.575	103.280	93.985	84.690	75.395	66.100	57.505	49.081
ULT. TOTAL SHEAR		223.993	182.069	167.768	153.235	138.546	123.856	109.167	94.477	79.788	65.798	51.979
BEAM SHEAR CAPACITY		95.858	110.707	115.716	120.135	123.966	127.206	104.660	83.658	66.690	53.010	44.956
MIN. STIRRUP AREA		0.491	0.294	0.227	0.161	0.096	0.060	0.060	0.068	0.070	0.064	0.060
STRP.(#5) SPAC.(IN.)		12.000*	24.000	24.000	24.000	24.000	24.000	24.000	24.000	24.000	24.000	24.000
PRESTRESS STRESS	TOP	-0.024	-0.103	-0.103	-0.103	-0.103	-0.103	-0.103	-0.103	-0.103	-0.103	-0.103
	BOT	0.228	0.962	0.962	0.962	0.962	0.962	0.962	0.962	0.962	0.962	0.962
INITIAL STRESSES	TOP	-0.024	-0.065	-0.032	-0.002	0.024	0.045	0.063	0.077	0.087	0.093	0.095
	BOT	0.228	0.923	0.888	0.857	0.831	0.808	0.790	0.775	0.765	0.759	0.757
FINAL STRESSES	TOP	-0.024	0.030	0.140	0.236	0.319	0.390	0.447	0.492	0.527	0.548	0.557
	BOT	0.228	0.661	0.479	0.321	0.187	0.076	-0.011	-0.079	-0.131	-0.160	-0.165
FINAL # TOP STRANDS		1.052	4.000	4.000	4.000	4.000	4.000	4.000	4.000	4.000	4.000	4.000
FINAL # BOT STRANDS		2.104	8.000	8.000	8.000	8.000	8.000	8.000	8.000	8.000	8.000	8.000
DEVELOP. # TOP STRDS		0.347	1.760	3.172	4.000	4.000	4.000	4.000	4.000	4.000	4.000	4.000
DEVELOP. # BOT STRDS		0.694	3.520	6.345	8.000	8.000	8.000	8.000	8.000	8.000	8.000	8.000

* - "ASE" REQUIREMENTS ARE MET USING THIS SPACING

DEFLECTIONS(INCHES) AT CENTER LINE OF SPAN

BEAM	WDLNC	P-LOADS	WDLC	INITIAL	FINAL	SIDEWALK	TRUCK	LANE	MILITARY	RAILROAD	PRESTR.	CAMBER
0.050	0.068	0.010	0.015	-0.109	0.000	0.000	0.035	0.022	0.028	0.000	-0.160	-0.203

MAXIMUM, ACTUAL AND MINIMUM ECCENTRICITIES(INCHES)AT SPAN TWENTIETH POINTS

ITEM	BRNG	0.05 L	0.10 L	0.15 L	0.20 L	0.25 L	0.30 L	0.35 L	0.40 L	0.45 L	0.50 L
MAX ECC, SIT= -201	53.969	27.974	29.400	30.658	31.748	32.671	33.425	34.012	34.432	34.683	34.767
MAX ECC, SIB= 2700	449.698	94.879	96.305	97.563	98.653	99.575	100.330	100.917	101.337	101.588	101.672
INITIAL ECCENTRICITY	22.196	22.196	22.196	22.196	22.196	22.196	22.196	22.196	22.196	22.196	22.196
FINAL ECCENTRICITY	22.196	22.196	22.196	22.196	22.196	22.196	22.196	22.196	22.196	22.196	22.196
MIN ECC, SFT= 2000	-341.736	-70.925	-65.751	-61.193	-57.251	-53.926	-51.217	-49.075	-47.448	-46.438	-46.044
MIN ECC, SFB= -424	-90.463	-27.116	-18.872	-11.695	-5.587	-0.547	3.426	6.508	8.880	10.183	10.418

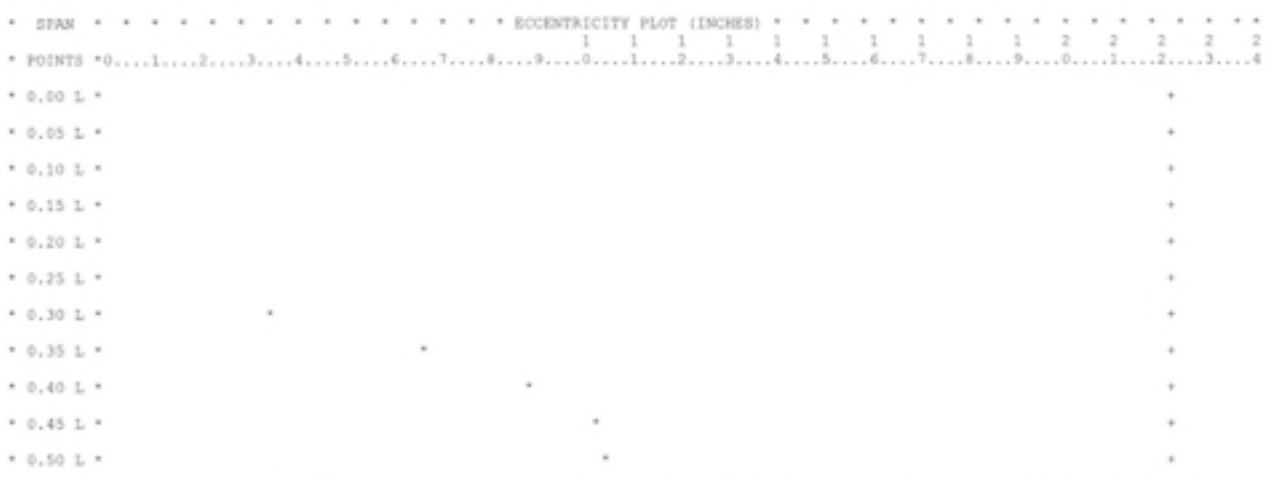

STRAND ARRANGEMENT (TOP STRANDS NOT SHOWN)= 4

```
*  SPAN  *  *  *  *  *  *  *  *  *  *  *  *  *  *  *STRAND ARRANGEMENT (INCHES) *  *  *  *  *  *  *  *  *  *  *  *  *  *  *  *  *  *
                                 1 1 1 1 1 1 1 1 1 1 2 2 2 2 2 2 2 2 2 2 3 3 3 3 3 3 3 3 3 3 4 4 4 4 4 4 4 4 4 4 5 5 5 5 5 5 5 5 5 5 6
* POINTS *0.1.2.3.4.5.6.7.8.9.0.1.2.3.4.5.6.7.8.9.0.1.2.3.4.5.6.7.8.9.0.1.2.3.4.5.6.7.8.9.0.1.2.3.4.5.6.7.8.9.0.1.2.3.4.5.6.7.8.9.0

*  END   *     +
*  BRNG  *     +


* 0.05 L *     +


* 0.10 L *     +


* 0.15 L *     +


* 0.20 L *     +


* 0.25 L *     +


* 0.30 L *     +


* 0.35 L *     +


* 0.40 L *     +


* 0.45 L *     +


* 0.50 L *     +
```

FINAL STRAND ARRANGEMENT AT END

ROW	TOTAL #STRDS	VER DIST-STRAIGHT STRDS	#RAISED STRDS	VER DIST-RAISED STRDS	#DEB 1	DEB LENGTH 1	#DEB 2	DEB LENGTH 2
1	8	2.500	0	0.000	0	0.00L	0	0.00L
TOP	4	60.500						

INITIAL TRANSFER LENGTH = 2.465 FT

FINAL TRANSFER LENGTH = 2.217 FT

DEVELOPMENT LENGTH = 6.717 FT

LOSSES (KSI)

TOP STRANDS INITIAL LOSSES= 2.177 TOP STRANDS ADDITIONAL LOSSES= 5.744 TOP STRANDS FINAL LOSSES= 7.921

BOT STRANDS INITIAL LOSSES= 7.421 BOT STRANDS ADDITIONAL LOSSES= 19.581 BOT STRANDS FINAL LOSSES= 27.002

TOTAL LOSSES FOR ALL STRANDS= 20.642

CALCULATION COVER SHEET

PROJECT	JOB NO.	CALC NO.	SHEET
I-75 / I-575 NORTHWEST CORRIDOR	NH000-0073-03(242)	BR#32	1
SUBJECT	DISCIPLINE		
References for Design	STRUCTURAL		

CALCULATION STATUS DESIGNATION	PRELIMINARY	CONFIRMED	SUPSEDED	VOIDED	INCOMPLETE
	☐	☐	☐	☐	X

COMPUTER PROGRAM/TYPE	SCP	MAINFRAME	PC	PROGRAM	VERSION/RELEASE NO.
	◯ YES ◯ NO	◯	◯	NONE	

Note 1: Georgia Department of Transportation (GDOT) terminated Contract Number TOURDPPI60072 for its convenience the completion of all work under that contract and directed that the work with respect to these calculations be discontinued.
(a) These calculations were not completed at the time of GDOT's direction and the information contained herein is not and/or has not been fully verified or checked. These calculations are a work-in-progress and are presented only as such.
(b) Any user is cautioned that the use of these calculations and any related information or calculations, without access to factors and without proper regard for their purpose, could lead to erroneous conclusions.
(c) If any such calculations or any information contained herein is used in future work efforts or any follow on design work a complete confirmation of the information contained herein should be performed prior to any such use.
(d) GTP has no responsibility for the use of this information not under its direct control.

Included Reference Information:
Roadway information
Existing Bridge Plans
BFI

A	As per GDOT's termination for convenience direction	47	47	JCR			11/30/09
NO.	REASON FOR REVISION	TOTAL NO. OF SHEETS	LAST SHEET NO.	BY	CHECKED	APPROVED/ ACCEPTED	DATE
RECORD OF REVISIONS							

CALCULATION SHEET

PROJECT: I-75 / I-575 NORTHWEST CORRIDOR
JOB NUMBER NH000-0073-03(242)
CALC NO. BR#32

SUBJECT: Roadway Information
BY: JCR DATE: 11/30/2009

SHEET NO.
SHEET REV.

I-75 ALIGN

Chord:		1367.9536		
Middle Ordinate:		60.7624		
External:		61.7291		
Tangent Direction:		N 11°11'16.8430" W		
Radial Direction:		N 78°48'43.1569" E		
Chord Direction:		N 21°20'28.7610" W		
Radial Direction:		N 58°30'19.3209" E		
Tangent Direction:		N 31°29'40.6791" W		
Element: Linear				
PT	( )	851+57.1900	1464061.5315	2173862.0069
PI	( )	856+00.0001	1464439.1108	2173630.6747
Tangential Direction:		N 31°29'40.6791" W		
Tangential Length:		442.8100		
Element: Linear				
PI	( )	856+00.0001	1464439.1108	2173630.6747
PI	( )	867+15.8615	1465390.1750	2173047.0450
Tangential Direction:		N 31°32'08.7294" W		
Tangential Length:		1115.8614		
Element: Linear				
PI	( )	867+15.8615	1465390.1750	2173047.0450
PC	( )	869+12.3150	1465557.5094	2172944.1217
Tangential Direction:		N 31°35'40.8020" W		
Tangential Length:		196.4536		
Element: Circular				
PC	( )	869+12.3150	1465557.5094	2172944.1217
PI	( )	875+09.9474	1466066.5581	2172631.0181
CC	( )		1467490.7248	2176087.1740
PT	( )	880+97.2903	1466648.4118	2172494.5971
Radius:		3690.0000		
Delta:		18°23'58.1256" Right		
Degree of Curvature (Arc):		1°33'09.8321"		
Length:		1184.9752		
Tangent:		597.6324		
Chord:		1179.8901		
Middle Ordinate:		47.4645		
External:		48.0830		
Tangent Direction:		N 31°35'40.8020" W		
Radial Direction:		N 58°24'19.1981" E		
Chord Direction:		N 22°23'41.7391" W		
Radial Direction:		N 76°48'17.3237" E		
Tangent Direction:		N 13°11'42.6762" W		
Element: Linear				
PT	( )	880+97.2903	1466648.4118	2172494.5971
PI	( )	890+82.1065	1467607.2270	2172269.7940
Tangential Direction:		N 13°11'42.6762" W		
Tangential Length:		984.8162		

BR #32

CROY'S I-75 PROFILE TEXT FILE

Used to create profile w/ our STATIONING

End of Report Profile.

CAiCE Visual Roads Design System
Profile Report

Profile Name : KC5 Mon Aug 24 15:12:57 2009
Description : I-75 NB PROPOSED

		STATION	ELEVATION	GRADE PERCENT	TOTAL VC LEN	BACK VC LEN	AHEAD VC LEN	K-VALUE
VPI AT	1	130+00.00	980.39					
VPI AT	2	130+50.00	981.52		0.000	0.000	0.000	
VPI AT	3	131+00.00	982.63		0.000	0.000	0.000	
VPI AT	4	131+50.00	983.68		0.000	0.000	0.000	
VPI AT	5	131+51.41	983.67		0.000	0.000	0.000	
VPI AT	6	133+54.08	988.27		0.000	0.000	0.000	
VPI AT	7	134+00.00	989.27		0.000	0.000	0.000	
VPI AT	8	134+50.00	990.28		0.000	0.000	0.000	
VPI AT	9	135+00.00	991.31					

BEG BR CROY'S STA

858+07.96 ← BEG BR NWC STA

860+10.63 ← END BR NWC STA

END BR CROY'S STA

End of Report Profile.

To get the same BR ELS. for our Widening of Croy's BR, the following I-75 Grade Data was used:

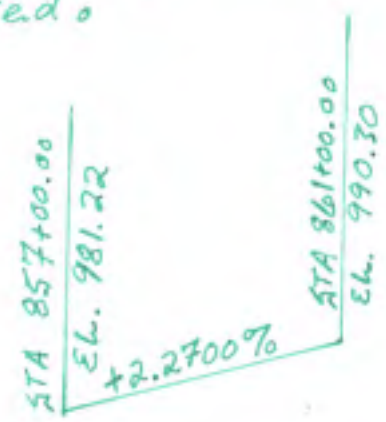

Horizontal Alignment Review Report

Report Created: 9/8/2009
Time: 2:05pm

Project: I-75/I-575
Description: I-75/I-575 PPI
File Name: N:\TRA\255717\Drawings\Civil\Rdy\InRoads\I-75 I-575.alg
Last Revised: san49773 9/8/2009 9:48:49 AM
Input Grid Factor: 1.00000000 **Note:** All units in this report are in feet unless specified otherwise.

Alignment Name: XR 859+00 BigShanty Conn
Alignment Description: I-75 Big Shanty Connector
Alignment Style: MAIN_P_SIDECL

		Station	Northing	Easting
Element: Linear				
POB	( )	52+10.4200	1464464.9640	2172793.7690
PC	( )	62+74.0083	1464812.8327	2173798.8598
Tangential Direction:		N 70°54'32.1035" E		
Tangential Length:		1063.5883		
Element: Circular				
PC	( )	62+74.0083	1464812.8327	2173798.8598
PI	( )	66+92.5547	1464949.7270	2174194.3860
CC	( )		1472372.8313	2171182.2932
PT	( )	71+10.3385	1465127.1475	2174573.4678
Radius:		8000.0000		
Delta:		5°59'23.1865" Left		
Degree of Curvature (Arc):		0°42'58.3101"		
Length:		836.3302		
Tangent:		418.5464		
Chord:		835.9494		
Middle Ordinate:		10.9264		
External:		10.9413		
Tangent Direction:		N 70°54'32.1035" E		
Radial Direction:		S 19°05'27.8964" E		
Chord Direction:		N 67°54'50.5103" E		
Radial Direction:		S 25°04'51.0831" E		
Tangent Direction:		N 64°55'08.9169" E		
Element: Linear				
PT	( )	71+10.3385	1465127.1475	2174573.4678
POE	( )	75+23.4884	1465302.2804	2174947.6620
Tangential Direction:		N 64°55'08.9169" E		
Tangential Length:		413.1499		

Alignment Name: XR 930+00 Frey/Barrett Lakes
Alignment Description: I-75 Frey/Barret Lakes Blvd
Alignment Style: MAIN_P_SIDECL

Vertical Alignment Review Report

Report Created: 9/8/2009
Time: 2:49pm

Project: I-75/I-575
Description: I-75/I-575 PPI
File Name: N:\TRA\255717\Drawings\Civil\Rdy\InRoads\I-75 I-575.alg
Last Revised: san49773 9/8/2009 2:47:38 PM
Input Grid Factor: 1.00000000 **Note:** All units in this report are in feet unless specified otherwise.

Horizontal Alignment: XR 859+00 BigShanty Conn
Horizontal Description: I-75 Big Shanty Connector
Horizontal Style: MAIN_P_SIDECL

Vertical Alignment: Big Shanty
Vertical Description: Big Shanty Profile (from Croy)
Vertical Style: MAIN_P_SIDECL

	Station	Elevation
Element: Linear		
POB	52+10.4200	959.4900
PVI	52+39.5300	959.2100
Tangent Grade:	-0.96%	
Tangent Length:	29.1100	
Element: Linear		
PVI	✓ 52+39.5300	✓ 959.2100
PVC	53+34.6600	958.4007
Tangent Grade:	-0.85%	
Tangent Length:	95.1300	
Element: Symmetrical Parabola		
PVC	53+34.6600	958.4007
PVI	✓ 54+34.6600	✓ 957.5500
PVT	55+34.6600	958.2503
VLOW	54+44.3579	957.9341
Length:	✓ 200.0000	
Entrance Grade:	-0.85%	
Exit Grade:	0.70%	
r = (g2 - g1) / L:	0.7755	
K = l / (g2 - g1):	128.9479	
Middle Ordinate:	0.3878	
Element: Linear		
PVT	55+34.6600	958.2503
PVC	61+60.0000	962.6296
Tangent Grade:	0.70%	
Tangent Length:	625.3400	
Element: Symmetrical Parabola		

© J. B. Trimble, Inc.

PVC	61+60.0000	962.6296
PVI	63+10.0000	963.6800
PVT	64+60.0000	968.4783
Length:	300.0000	
Entrance Grade:	0.70%	
Exit Grade:	3.20%	
r = (g2 - g1) / L:	0.8328	
K = l / (g2 - g1):	120.0700	
Middle Ordinate:	0.9370	

Element: Linear

PVT	64+60.0000	968.4783
PVI	70+07.4400	985.9900
Tangent Grade:	3.20%	
Tangent Length:	547.4400	

Element: Linear

PVI	70+07.4400	985.9900
POE	571+58.3447	973.4185
Tangent Grade:	-0.03%	
Tangent Length:	50150.9047	

Horizontal Alignment: XR 930+00 Frey/Barrett Lakes
Horizontal Description: I-75 Frey/Barret Lakes Blvd
Horizontal Style: MAIN_P_SIDECL

Station	Elevation

Vertical Alignment: Point Profile
Vertical Description: Frey/Barrett Lakes Point Profile
Vertical Style: MAIN_P_SIDECL

J. B. Trimble, Inc.

Element: Linear

POB	97+41.5134	1063.9017
PVI	97+50.0000	1063.8355
Tangent Grade:	-0.78%	
Tangent Length:	8.4866	

Element: Linear

PVI	97+50.0000	1063.8355
PVI	98+00.0000	1063.4695
Tangent Grade:	-0.73%	
Tangent Length:	50.0000	

Element: Linear

PVI	98+00.0000	1063.4695
PVI	98+50.0000	1063.2343
Tangent Grade:	-0.47%	
Tangent Length:	50.0000	

Element: Linear

PVI	98+50.0000	1063.2343
PVI	99+00.0000	1063.0571

RAMP A ALIGN

Tangent:		258.2225		
Chord:		515.2689		
Middle Ordinate:		8.6989		
External:		8.7188		
Tangent Direction:		N 23°50'07.3473" W		
Radial Direction:		N 66°09'52.6526" E		
Chord Direction:		N 27°42'10.9756" W		
Radial Direction:		N 58°25'45.3961" E		
Tangent Direction:		N 31°34'14.6040" W		
Element: Linear				
PT	( )	51+57.9235	1464030.3844	2173809.8479
PI	( )	56+00.0435	1464407.5045	2173579.0870
Tangential Direction:		N 31°27'45.3542" W		
Tangential Length:		442.1200		
Element: Linear				
PI	( )	56+00.0435	1464407.5045	2173579.0870
PI	( )	67+15.9016	1465358.5659	2172995.4590
Tangential Direction:		N 31°32'08.7284" W		
Tangential Length:		1115.8581		
Element: Linear				
PI	( )	67+15.9016	1465358.5659	2172995.4590
PC	( )	69+12.2528	1465525.8130	2172892.5893
Tangential Direction:		N 31°35'40.8851" W		
Tangential Length:		196.3512		
Element: Circular				
PC	( )	69+12.2528	1465525.8130	2172892.5893
PI	( )	75+19.0295	1466045.0395	2172578.6118
CC	( )		1467375.5208	2175951.4629
PT	( )	81+14.3482	1466638.7893	2172453.5559
Radius:		3574.6506		
Delta:		19°16'03.4126" Right		
Degree of Curvature (Arc):		1°36'10.2089"		
Length:		1202.0953		
Tangent:		606.7767		
Chord:		1196.4391		
Middle Ordinate:		50.4116		
External:		51.1327		
Tangent Direction:		N 31°09'41.2124" W		
Radial Direction:		N 58°50'18.7875" E		
Chord Direction:		N 21°31'39.5061" W		
Radial Direction:		N 78°06'22.2001" E		
Tangent Direction:		N 11°53'37.7998" W		
Element: Linear				
PT	( )	81+14.3482	1466638.7893	2172453.5559
POE	( )	89+22.2194	1467428.8615	2172284.9084
Tangential Direction:		N 12°02'57.9302" W		

BR#32

CALCULATION SHEET

PROJECT: I-75 / I-575 NORTHWEST CORRIDOR
JOB NUMBER NH000-0073-03(242)
CALC NO. BR#32

SUBJECT: Existing Bridge Plans
BY: JCR DATE: 11/30/2009

SHEET NO.
SHEET REV.

STATE	PROJECT NUMBER	SHEET NO.	TOTAL SHEETS
GA.	CSSTP-0006-00(869)		

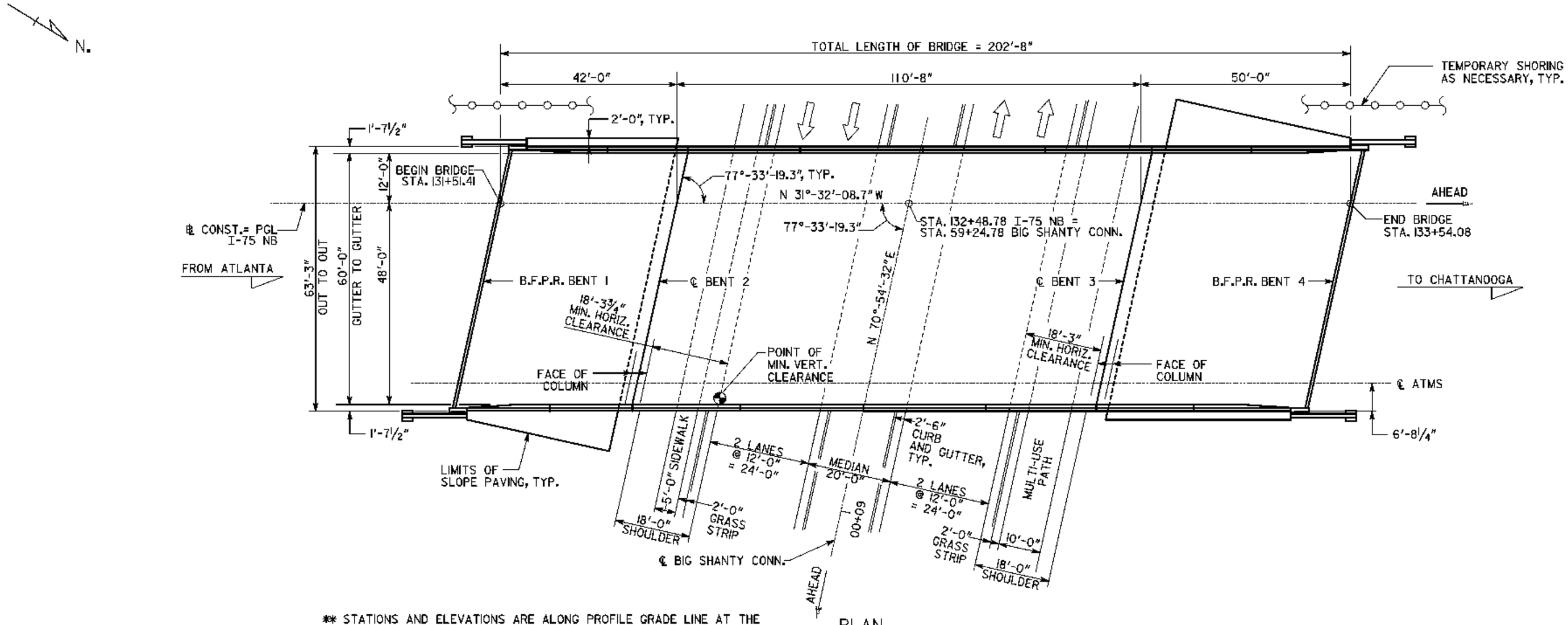

** STATIONS AND ELEVATIONS ARE ALONG PROFILE GRADE LINE AT THE INTERSECTION OF PROFILE GRADE LINE AND B.F.P.R. OR ℄ BENTS.

PLAN

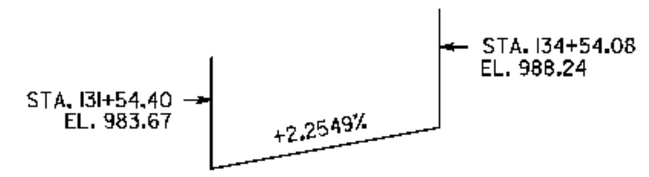

GRADE DATA
I-75 NORTH BOUND

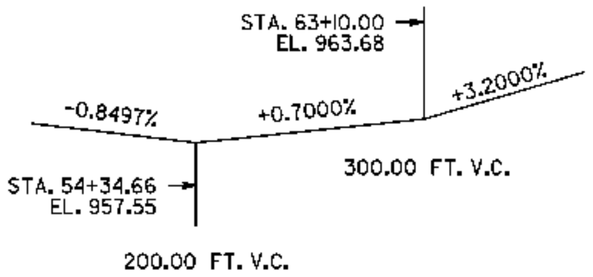

VERTICAL CURVE DATA
BIG SHANTY CONNECTOR

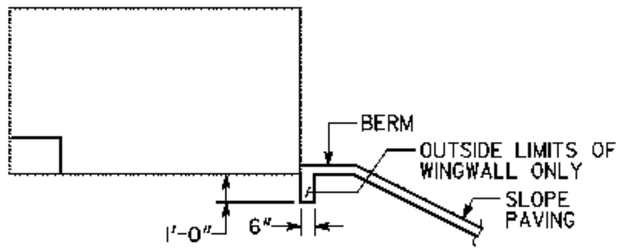

SLOPE PAVING DETAIL AT WINGS

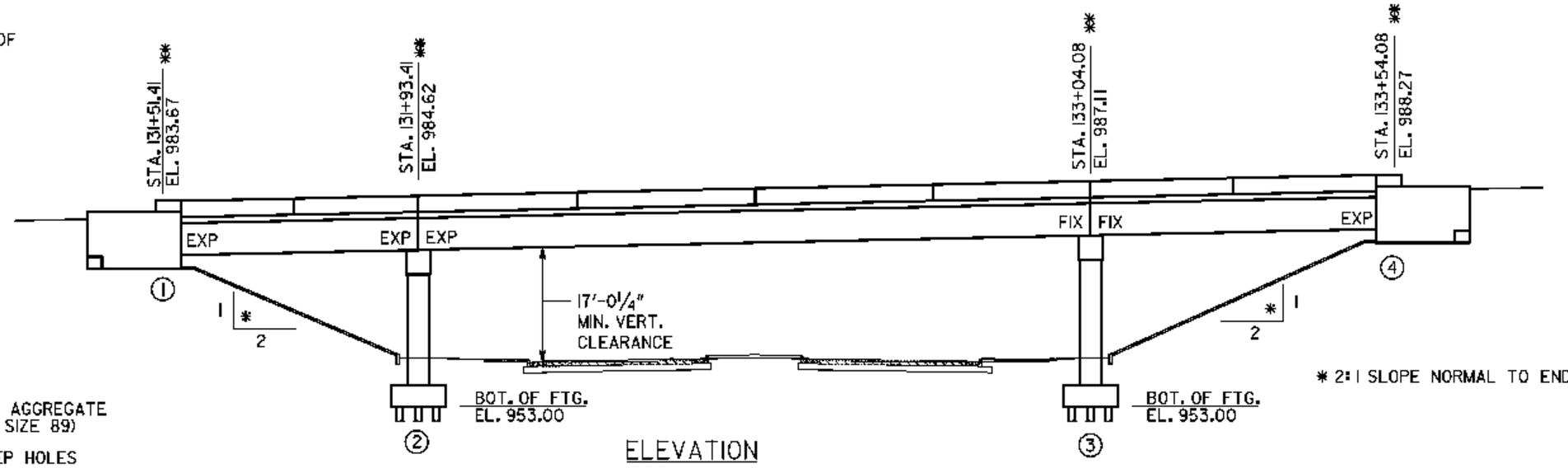

ELEVATION

* 2:1 SLOPE NORMAL TO END BENT

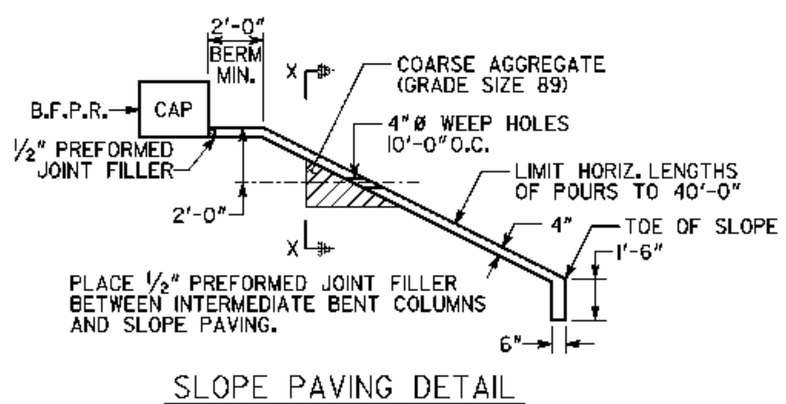

SLOPE PAVING DETAIL

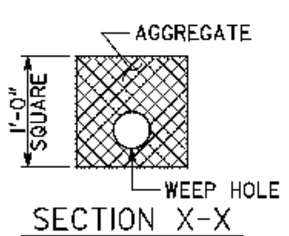

SECTION X-X

NOTES:
- ALL BENTS ARE PARALLEL.
- PILES AT END BENTS & WINGWALLS NOT SHOWN.
- PROPOSED BRIDGE TO BE BUILT ON A CONSTANT CROSS SLOPE OF 2.00%, SLOPING DOWN TO THE RIGHT.

PROJECT P.I. NO. 0006869
BRIDGE NO. 2

Moore and Altobelli Associates, Inc.
221 Beaver Ruin Road Suite 190
Norcross, Georgia 30071
Tel: (770) 263-5945

GEORGIA
DEPARTMENT OF TRANSPORTATION
PRECONSTRUCTION DIVISION-OFFICE OF BRIDGE DESIGN

PLAN AND ELEVATION
I-75 NB OVER BIG SHANTY CONNECTOR
COBB COUNTY CSSTP-0006-00(869)

NO SCALE OCTOBER 2008

DESIGNED BY	HHD	DRAWN BY	DAW	QUANTITIES BY	—
CHECKED BY	QSJ	CHECKED BY	QSJ	CHECKED BY	—

SUPERVISED BY HISHAM H DEEB, PE
DESIGN GROUP WEI
APPROVED PVL
BRIDGE SHEET 1 OF 16

REVISIONS | BY | DATE

X.DGN

STATE	PROJECT NUMBER	SHEET NO.	TOTAL SHEETS
GA.	CSSTP-0006-00(869)		

BRIDGE CONSISTS OF

1 - 42'-0" TYPE I MOD PSC BEAM SPAN WITH BULB TEE, 63 IN, PSC FASCIA BEAMS ---------- SPECIAL DESIGN

1 - 50'-0" TYPE I MOD PSC BEAM SPAN WITH BULB TEE, 63 IN, PSC FASCIA BEAMS ---------- SPECIAL DESIGN

1 -110'-8" BULB TEE, 63 IN, PSC BEAM SPAN ---------- SPECIAL DESIGN

2 - STEEL H PILE END BENTS ---------- SPECIAL DESIGN

2 - CONCRETE INTERMEDIATE BENTS ---------- SPECIAL DESIGN

4 - END POST AND GUARDRAIL ATTACHMENT DETAIL ------- GA. STD. 3054 (9-30-02)
(L = 4'-0"; W = 1'-1"; H = 2'-8")
(L = 4'-3"; W = 1'-1"; H = 2'-8")

BAR BENDING DETAILS ---------- GA. STD. 3901 (8-69)

TYPICAL FILL DETAIL AT END OF BRIDGE ---------- GA. STD. 9037 (9-99)

TRAFFIC DATA

TRAFFIC ----------ADT = 75,300 (2011)
ADT = 83,200 (2031)

DESIGN SPEED ---------- 65 MPH

TRUCKS ----------11 %

24 HR TRUCKS ----------13 %

PROPOSED UTILITIES

4-4 INCH DIAMETER ATMS ---------- GEORGIA DEPARTMENT OF TRANSPORTATION

DESIGN DATA

SPECIFICATIONS ----------AASHTO 17TH EDITION, 2002
(DESIGNED FOR SEISMIC PERFORMANCE CATEGORY A)

TYPICAL HS20-44 AND/OR MILITARY LOADING ---------- IMPACT ALLOWED

FUTURE PAVING ALLOWANCE ---------- 30 LBS PER SQ FT

CONCRETE: SUPERSTRUCTURE ---------- CLASS AA, f'_c = 3,500 PSI
PSC BEAMS ---------- CLASS AAA, f'_c = SEE BEAM SHEETS
PSC BEAM ALLOWABLE TENSION ---------- SEE BEAM SHEETS
SUBSTRUCTURE ---------- CLASS AA, f'_c = 3,500 PSI

REINFORCEMENT STEEL: ---------- GRADE 60, f_y = 60,000 PSI

PRETENSIONING STRANDS: ---------- f_s = 270,000 PSI

GENERAL NOTES

SPECIFICATIONS - GEORGIA STANDARD SPECIFICATIONS, 2001 EDITION, AND 2008 SUPPLEMENTAL SPECIFICATIONS AS MODIFIED BY CONTRACT DOCUMENTS.

EPOXY COATED REINFORCING STEEL - COAT BARS NUMBERED IN THE 90 SERIES (I.E. 490, 890, ETC.) W/ EPOXY. SEE GEORGIA DOT SPECIFICATIONS SECTION 514.

REINFORCING STEEL - PLACE AND TIE ALL REINFORCING STEEL IN ACCORDANCE WITH THE GEORGIA DOT SPECIFICATIONS. DO NOT WELD REINFORCING STEEL.

CHAMFER - CHAMFER ALL EXPOSED CONCRETE EDGES 3/4" UNLESS OTHERWISE NOTED.

TEMPORARY SHORING - INCLUDE THE COST OF TEMPORARY SHORING AS NECESSARY FOR BRIDGE CONSTRUCTION IN THE OVERALL BID SUBMITTED.

TRAFFIC CONTROLS - SEE ROADWAY PLANS FOR TRAFFIC CONTROLS AND TRAFFIC CONTROL PAYMENT.

WAITING PERIOD - NONE REQUIRED.

FOUNDATION BACKFILL MATERIAL - PLACE 1'-0" OF TYPE II FOUNDATION BACKFILL MATERIAL UNDER EACH FOOTING AT BENTS 2 AND 3. THE QUANTITY IS BASED ON THE PLAN FOOTING DIMENSIONS PLUS 2'-0".

PLAN DRIVING OBJECTIVE - SEE SUBSTRUCTURE DETAILS.

DRIVING DATA PILES - ONE DRIVING DATA PILE SHALL BE REQUIRED AT EACH OF BENTS 1 AND 3.

SMOOTH DOWEL BARS - PLACE SMOOTH DOWEL BARS IN FORMED 3" DIAMETER X 12" DEEP HOLES AND GROUT IN PLACE SIMILAR TO ANCHOR BOLTS, SEE SUB-SECTION 501.3.05.B.3 OF THE GEORGIA DOT SPECIFICATIONS. STIRRUPS MAY BE SHIFTED SLIGHTLY TO CLEAR FORMED HOLES.

GROOVED CONCRETE - GROOVE THE ENTIRE LENGTH OF THE BRIDGE TRANSVERSELY AS PER SUB-SECTION 500.3.05.T.9.C OF THE GEORGIA DOT SPECIFICATIONS.

PSC BEAMS - PRESTRESSED CONCRETE AASHTO TYPE I MODIFIED BEAMS SHALL BE PAID FOR AS "LF PSC BEAMS, AASHTO TYPE I".

STANDARD PLAN MODIFICATION - MODIFY THE APPROACH SLAB STANDARD TO INCREASE THE 3/4" EXPANSION JOINT SHOWN BETWEEN THE APPROACH SLAB AND THE BACK FACE PAVING REST AND END POST TO 1½". SEE ROADWAY PLANS FOR APPROACH SLAB PAYMENT.

WELDING - ALL WELDING ON GEORGIA DOT PROJECTS SHALL BE PERFORMED BY CERTIFIED WELDERS THAT HAVE IN THEIR POSSESSION A CURRENT WELDING CERTIFICATION CARD ISSUED BY THE OFFICE OF MATERIALS AND RESEARCH. USE ONLY E70XX (EXCLUDING E7014 AND E7024) LOW HYDROGEN ELECTRODES FOR MANUAL SHIELDED METAL ARC WELDING.

INCIDENTAL ITEMS - INCLUDE THE COST INCIDENTAL TO THE WORK THAT IS NOT SPECIFICALLY COVERED BY THE GEORGIA STANDARD SPECIFICATIONS, SUPPLEMENTAL SPECIFICATIONS AND/OR SPECIAL PROVISIONS IN THE OVERALL BID SUBMITTED. THIS INCLUDES THE COST OF WATERPROOFING, JOINT FILLERS, AND OTHER INCIDENTAL ITEMS NECESSARY TO COMPLETE THE WORK.

SUMMARY OF QUANTITIES

PAY ITEM QUANTITY	NUMBER	UNIT	PAY ITEM
207-0203	27	CY	FOUND BKFILL MATL, TP II
211-0200	288	CY	BRIDGE EXCAVATION, GRADE SEPARATION
441-0004	600	SY	CONC SLOPE PAV, 4 IN
500-0100	1306	SY	GROOVED CONCRETE
500-1006	LUMP	LS	SUPERSTR CONCRETE, CL AA, BR NO - 2 (392)
500-2100	393	LF	CONCRETE BARRIER
500-3002	299	CY	CLASS AA CONCRETE
507-9001	627	LF	PSC BEAMS, AASHTO TYPE I, BR NO - 2
507-9031	1169	LF	PSC BEAMS, AASHTO, BULB TEE, 63 IN, BR NO - 2
511-1000	42203	LB	BAR REINF STEEL
511-3000	LUMP	LS	SUPERSTR REINF STEEL, BR NO - 2 (47424)
514-1000	LUMP	LS	EPOXY COATED SUPERSTR REINF STEEL, BR NO - 2 (44727)
520-1125	1240	LF	PILING IN PLACE, STEEL H, HP 12 X 53
520-1147	1220	LF	PILING IN PLACE, STEEL H, HP 14 X 73
520-4125	1	EA	LOAD TEST, STEEL H, HP 12 X 53 (IF REQD)
520-4147	1	EA	LOAD TEST, STEEL H, HP 14 X 73 (IF REQD)

BRIDGE NO. 2

Marcard Allaben & Associates, Inc.
221 Beaver Ruin Road Suite 190
Norcross, Georgia 30071
Tel: (770) 263-9345

GEORGIA
DEPARTMENT OF TRANSPORTATION
PRECONSTRUCTION DIVISION-OFFICE OF BRIDGE DESIGN

GENERAL NOTES
I-75 NB OVER BIG SHANTY CONNECTOR
COBB COUNTY CSSTP-0006-00(869)

NO SCALE OCTOBER 2008

SUPERVISED BY	DESIGNED BY ENC	DRAWN BY DAW	QUANTITIES BY
HISHAM H DEEB, PE	CHECKED BY QSJ	CHECKED BY ENC	CHECKED BY
DESIGN GROUP WEI			
APPROVED PVL			
BRIDGE SHEET 2 OF 16			

DATE / REVISIONS / BY

X.DGN

STATE	PROJECT NUMBER	SHEET NO.	TOTAL SHEETS
GA.	CSSTP-0006-00(869)		

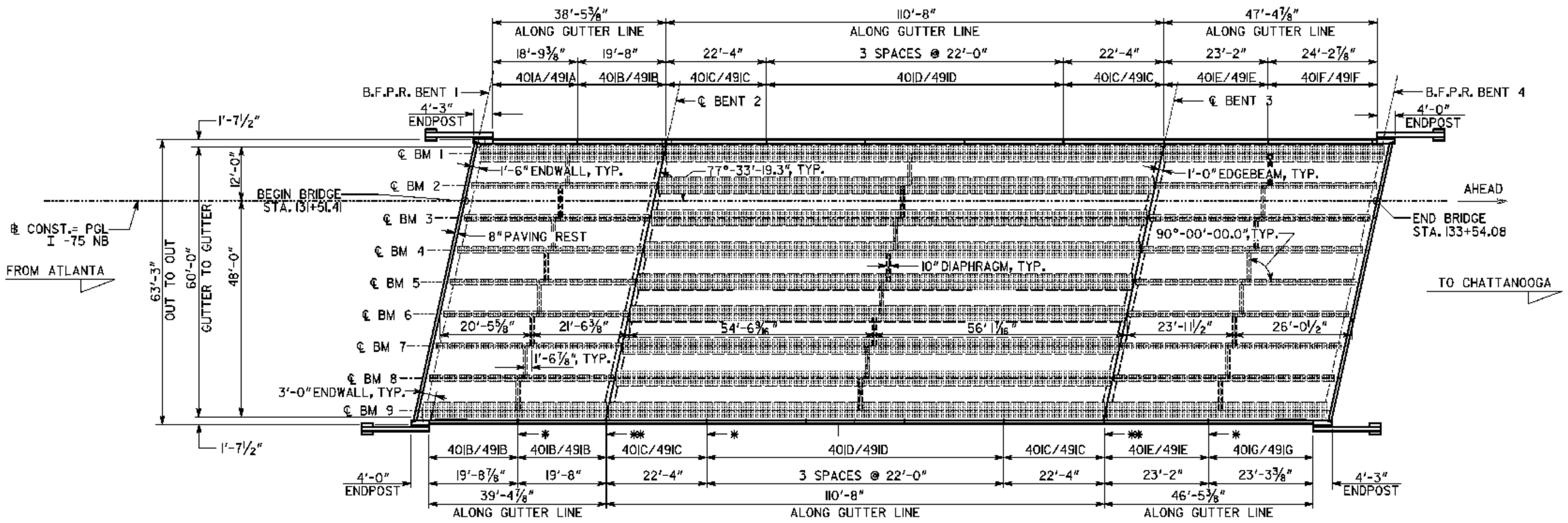

PLAN

* ℄ 1" EXPANSION JOINT IN BARRIER, TYP.

** ℄ REQ'D. CONSTRUCTION JOINT IN SLAB.

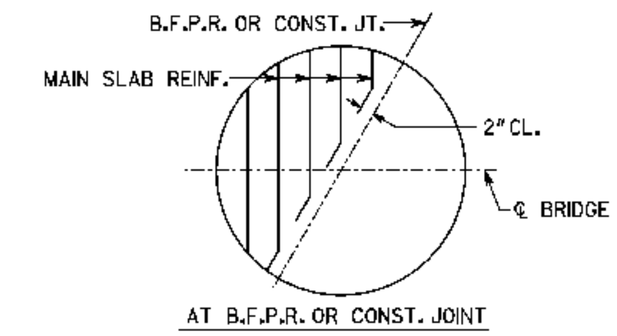

BARS ARE DETAILED IN BAR DETAILS AS EQUIVALENT FULL LENGTH BARS.

BAR BENDING DETAILS AT SKEWED JOINTS

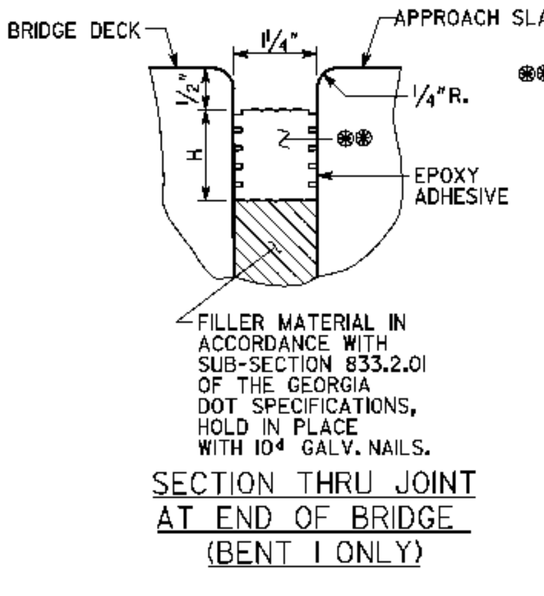

SECTION THRU JOINT AT END OF BRIDGE (BENT 1 ONLY)

*** SEAL AS PER GEORGIA DOT SPECIFICATIONS SECTION 449.2.D SEAL SHALL BE 2"(H) BY 1¼" WIDE PRIOR TO INSTALLATION.

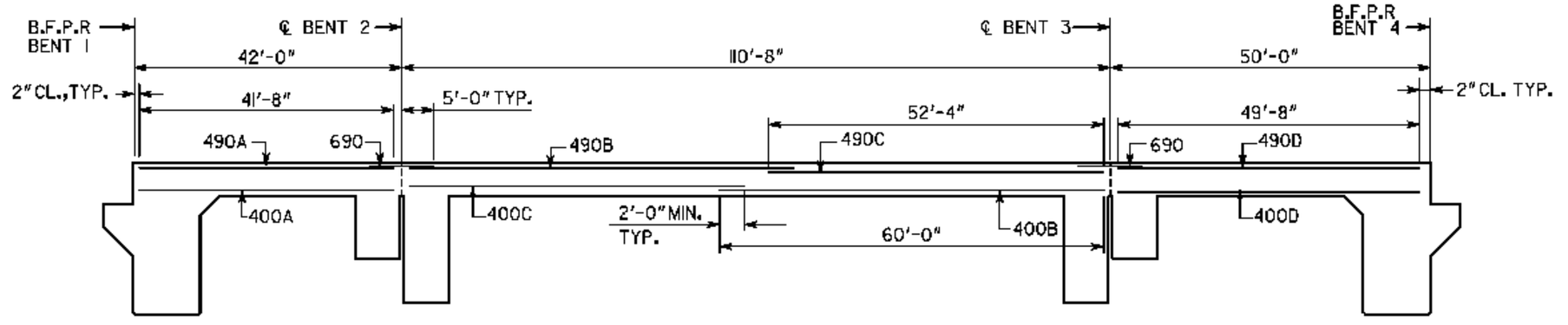

LONGITUDINAL DECK SECTION

SUPERSTRUCTURE QUANTITIES				
ITEM ITEM	SPAN 1	SPAN 2	SPAN 3	TOTAL
LUMP- SUPERSTR. CONCRETE, CY., CLASS "AA"	86.4	206.0	98.9	391.3
LUMP- SUPERSTR. REINF. STEEL, LBS.	11,495	22,980	12,949	47,424
LUMP- EPOXY COATED SUPERSTR. REINF. STEEL, LBS.	9,011	25,074	10,642	44,727

NOTES:

1. MAINTAIN 2" CLEARANCE TO ALL REINFORCEMENT UNLESS NOTED OTHERWISE.
2. END POST CONCRETE AND BAR REINFORCING STEEL INCLUDED IN SPANS 1 & 3 QUANTITIES.
3. REINFORCING QUANTITY FOR BARS 690 INCLUDED IN SPAN 2.

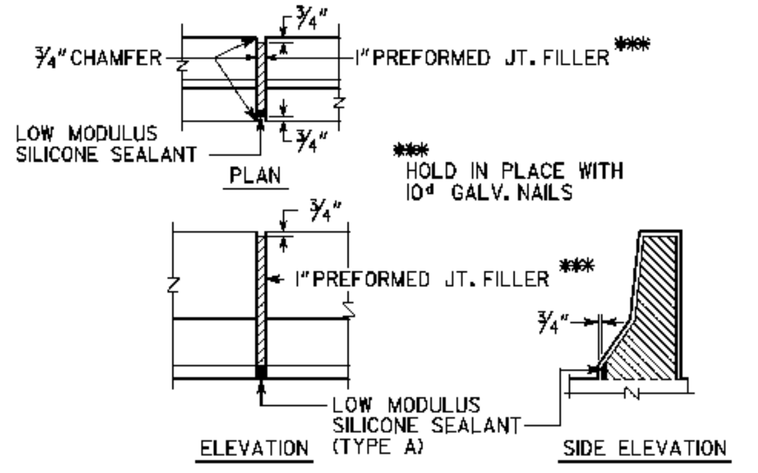

DETAILS OF 1" EXPANSION JOINT IN BARRIER

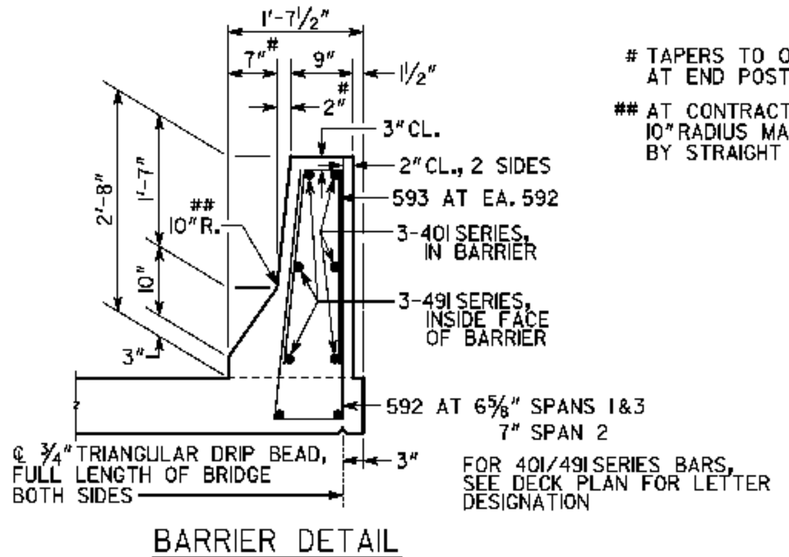

BARRIER DETAIL

\# TAPERS TO 0" AT END POST

\## AT CONTRACTOR'S OPTION, 10" RADIUS MAY BE REPLACED BY STRAIGHT INTERSECTING SLOPES.

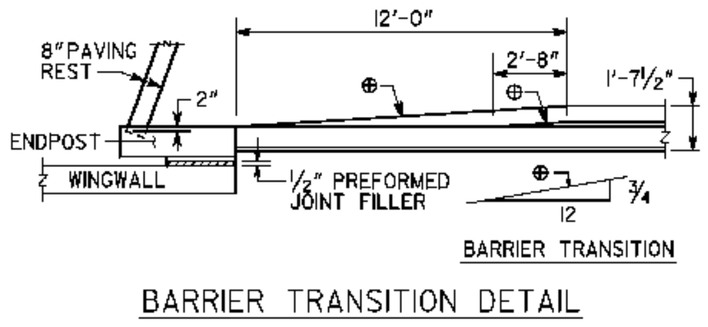

BARRIER TRANSITION DETAIL

BRIDGE NO. 2

Moreland Altobelli Associates, Inc.
221 Beaver Ruin Road Suite 190
Norcross, Georgia 30071
Tel: (770) 263-9945

GEORGIA
DEPARTMENT OF TRANSPORTATION
PRECONSTRUCTION DIVISION-OFFICE OF BRIDGE DESIGN

DECK PLAN

I-75 NB OVER BIG SHANTY CONNECTOR

COBB COUNTY CSSTP-0006-00(869)

NO SCALE OCTOBER 2008

SUPERVISED BY	REVISIONS	BY	DATE
HISHAM H DEEB, PE			
DESIGN GROUP			
WEI			
APPROVED			
PVL			
BRIDGE SHEET 3 OF 16			

DESIGNED BY	ENC	DRAWN BY	DAW	QUANTITIES BY	JTW
CHECKED BY	GSJ	CHECKED BY	ENC	CHECKED BY	EJC

X.DGN

DIMENSION "D" IS MEASURED FROM TOP OF SLAB TO TOP OF BEAMS AT CENTERLINE BEARING. VARY "D" BETWEEN BEARINGS TO COMPENSATE FOR DEAD LOAD DEFLECTION. MAINTAIN A CONSTANT SLAB THICKNESS OF 7¾".

"D" DIMENSION		
	EXT. BMS 1 & 9	INT. BMS 2 TO 8
SPAN 1	9⅞"	9"
SPAN 3	9⅞"	9⅜"

STATE	PROJECT NUMBER	SHEET NO.	TOTAL SHEETS
GA.	CSSTP-0006-00(869)		

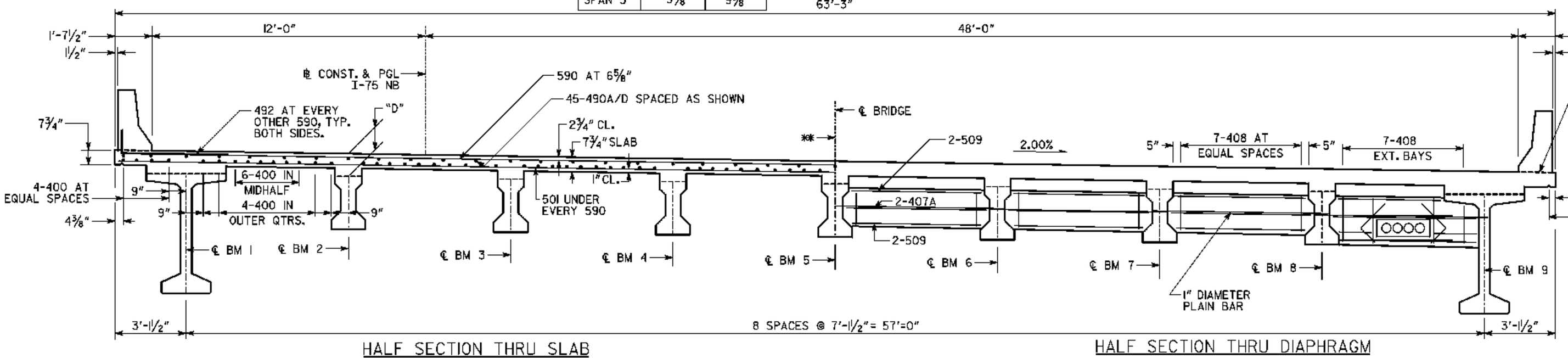

HALF SECTION THRU SLAB

HALF SECTION THRU DIAPHRAGM

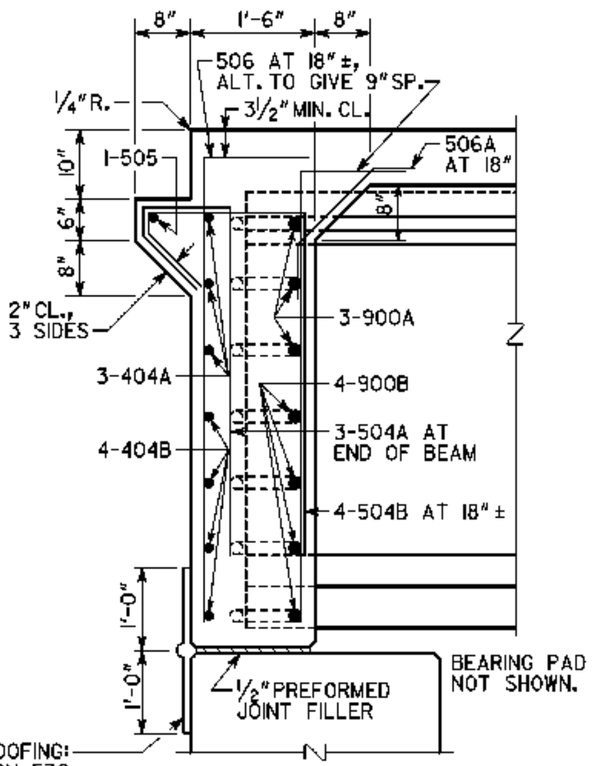

SECTION B-B AT ENDWALL

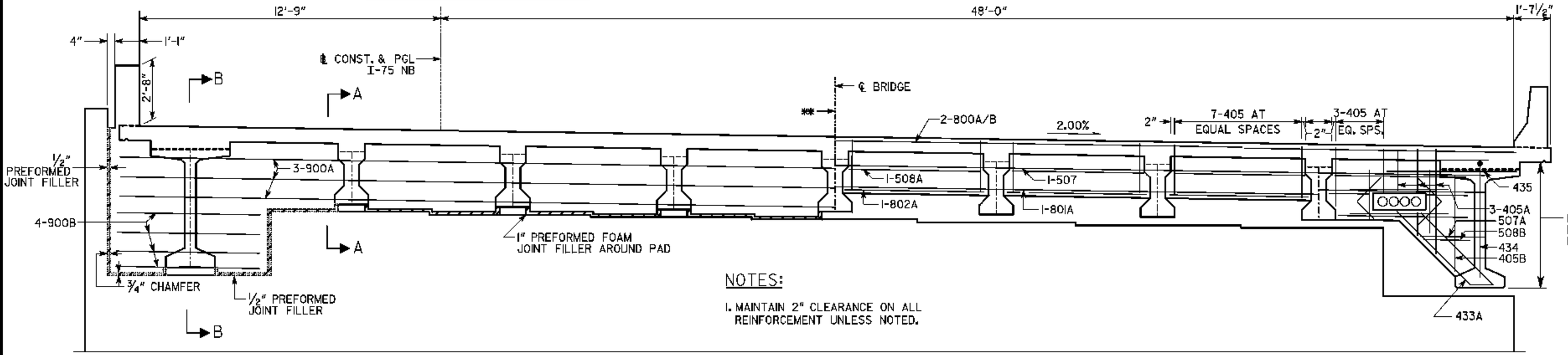

NOTES:

1. MAINTAIN 2" CLEARANCE ON ALL REINFORCEMENT UNLESS NOTED.

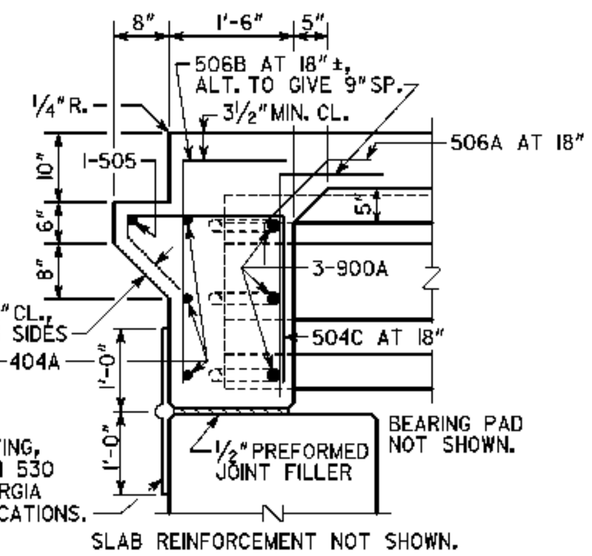

SECTION A-A AT ENDWALL

HALF SECTION THRU ENDWALL

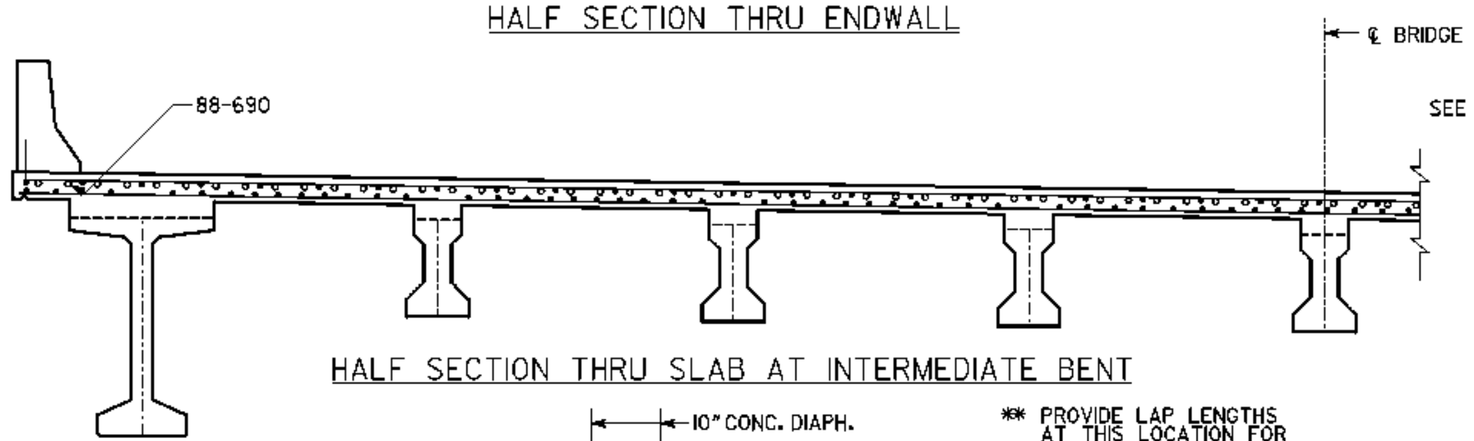

HALF SECTION THRU SLAB AT INTERMEDIATE BENT

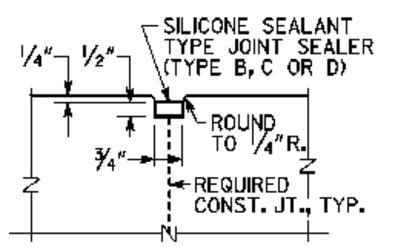

DETAIL "A"

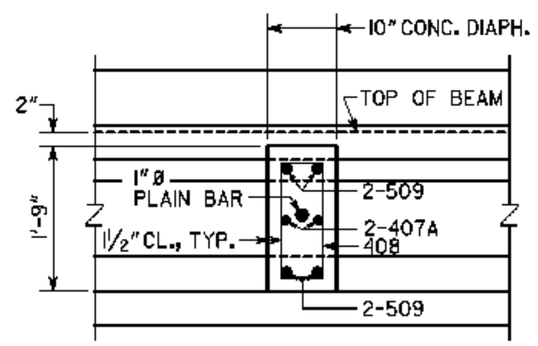

SLAB REINFORCEMENT NOT SHOWN.

SECTION THRU DIAPHRAGM

** PROVIDE LAP LENGTHS AT THIS LOCATION FOR BARS 404, 501, 505, & 800. LAP BARS 500 AT MID BAY BETWEEN BEAMS 5 AND 6. FOR LAP LENGTHS, SEE TABLE.

** LAP LENGTH TABLE	
BAR SERIES	MIN. LAP LENGTH
400	1'-9"
490	2'-0"
500	2'-2"
590	2'-7"
800	4'-7"
900	5'-9"

HALF SECTION THRU EDGE BEAM

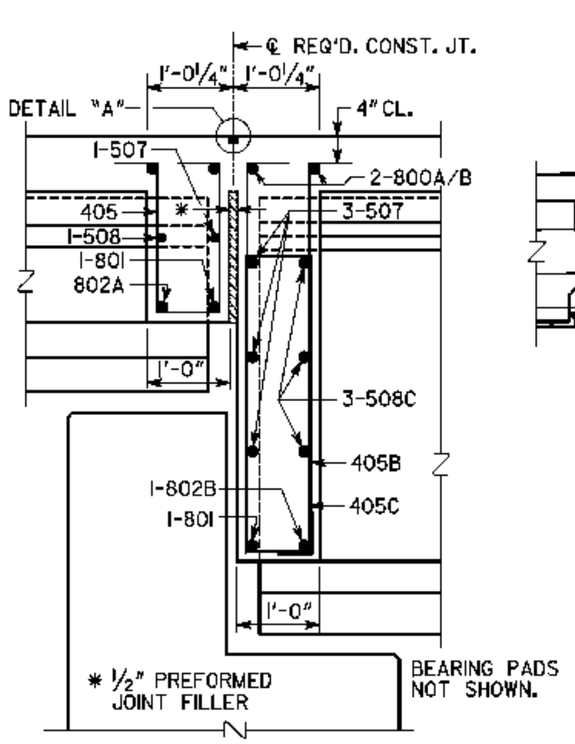

SLAB REINFORCEMENT NOT SHOWN.

SECTION THRU EDGE BEAM

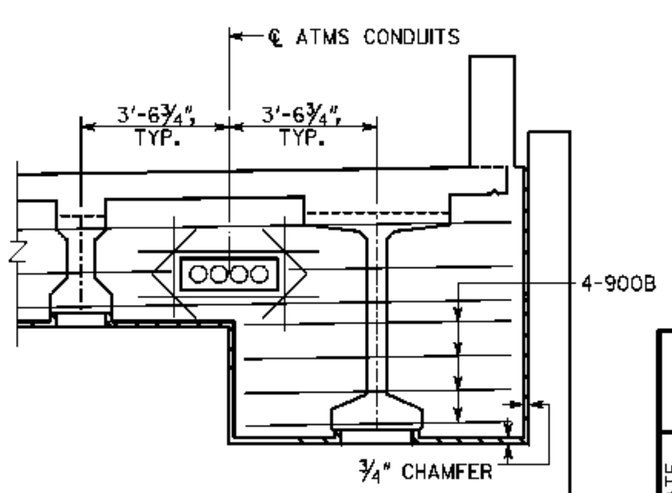

PARTIAL SECTION THRU END WALL

BRIDGE NO. 2

Moore and Alabi Associates, Inc.
221 Beaver Ruth Road Suite 190
Norcross, Georgia 30071
Tel.: (770) 263-9345

GEORGIA
DEPARTMENT OF TRANSPORTATION
PRECONSTRUCTION DIVISION-OFFICE OF BRIDGE DESIGN

DECK SECTIONS - SPANS 1 & 3
I-75 NB OVER BIG SHANTY CONNECTOR
COBB COUNTY CSSTP-0006-00(869)

NO SCALE OCTOBER 2008

SUPERVISED BY	HISHAM H DEEB, PE
DESIGN GROUP	WEI
APPROVED	PVL
BRIDGE SHEET	4 OF 16

DESIGNED BY	ENC	DRAWN BY	DAW	QUANTITIES BY	---
CHECKED BY	GSJ	CHECKED BY	ENC	CHECKED BY	---

BY	REVISIONS	DATE

X.DGN

STATE	PROJECT NUMBER	SHEET NO.	TOTAL SHEETS
GA.	CSSTP-0006-00(869)		

DIMENSION "D" IS MEASURED FROM TOP OF SLAB TO TOP OF BEAMS AT CENTERLINE BEARING. VARY "D" BETWEEN BEARINGS TO COMPENSATE FOR DEAD LOAD DEFLECTION. MAINTAIN A SLAB THICKNESS OF 7⅝" BETWEEN BEAMS AND 7¾" IN THE OVERHANGS.

"D" = 11⅝" (EXT. BEAMS)
= 11⅜" (INT. BEAMS)

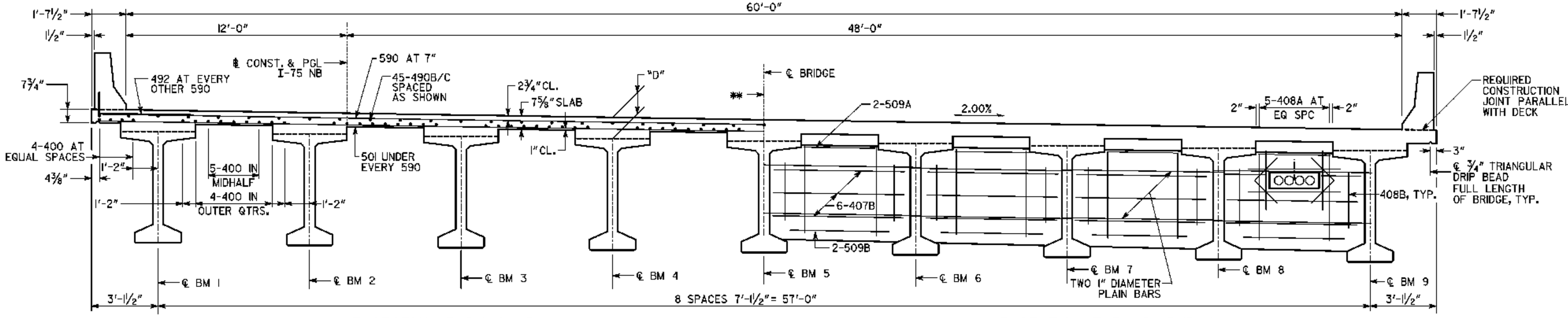

HALF SECTION THRU SLAB

HALF SECTION THRU DIAPHRAGM

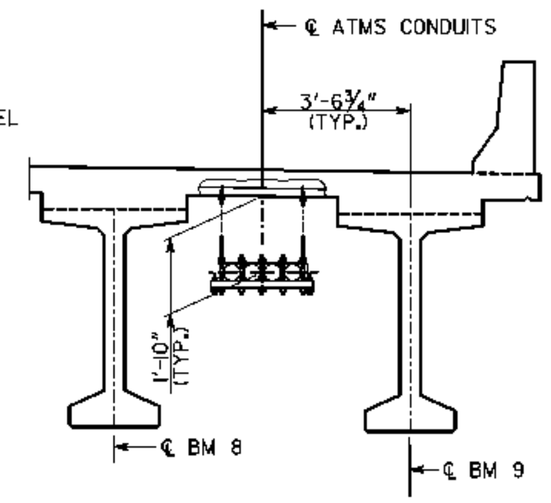

SECTION THRU SLAB

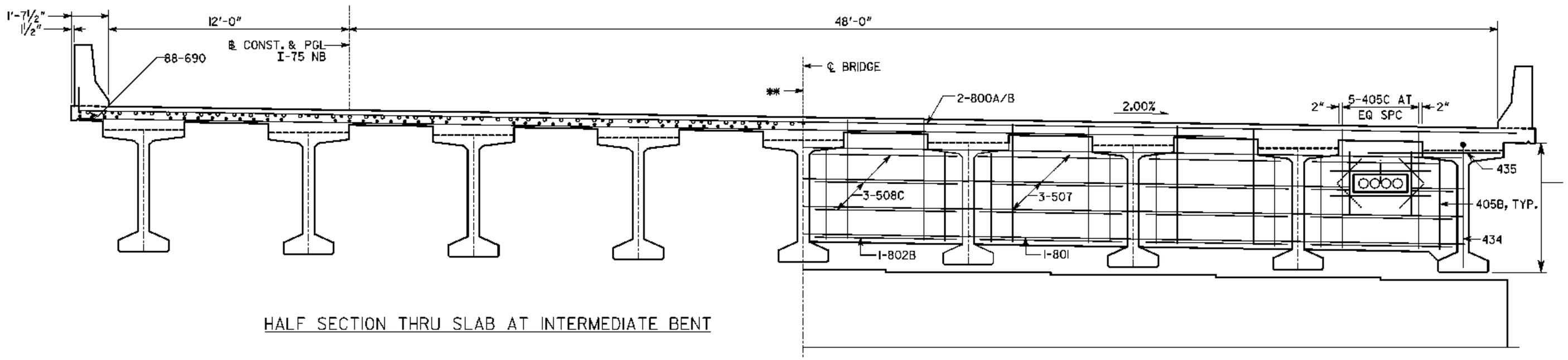

HALF SECTION THRU SLAB AT INTERMEDIATE BENT

HALF SECTION THRU EDGE BEAM

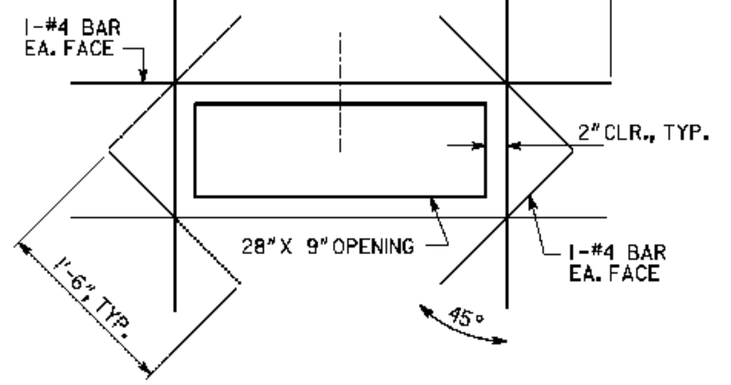

DETAIL OF REINFORCING AT OPENING

COST OF #4 BARS AROUND OPENINGS SHALL BE INCLUDED IN THE OVERALL PRICE BID SUBMITTED.

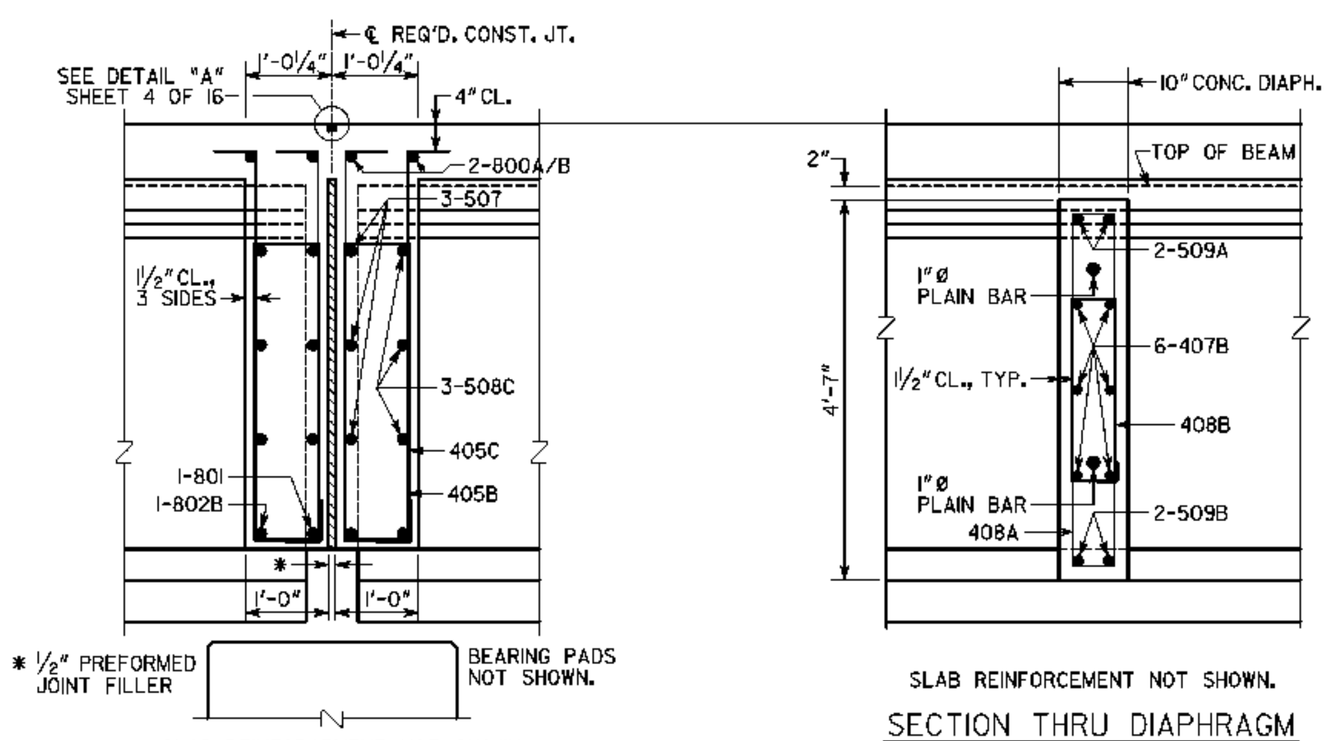

SLAB REINFORCEMENT NOT SHOWN.

SECTION THRU EDGE BEAM
(AT EXTERIOR BEAMS)

SLAB REINFORCEMENT NOT SHOWN.

SECTION THRU DIAPHRAGM

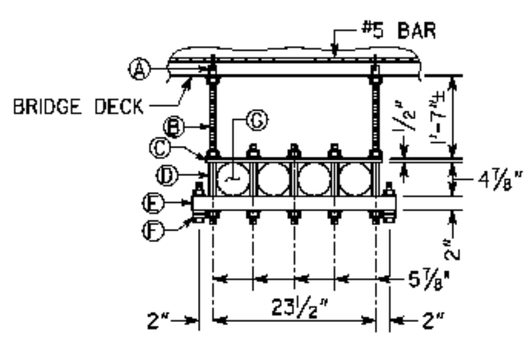

4 CONDUIT

Ⓐ ¾"LOOP INSERT FOR ¾"- 10 ROD.
Ⓑ ¾"- 10 GALVANIZED MACHINE ROD.
Ⓒ ½"X 2"X 25¾" P.V.C. FLAT BAR.
Ⓓ 1"X 4⅞" P.V.C. SPACER TUBE.
Ⓔ ¼"X 2"X 2"X 29¾" FIBERGLASS TUBE.
Ⓕ STRAND CLAMP.
Ⓖ 4" DIA. FIBERGLASS CONDUIT.

DETAIL OF HANGER FOR ATMS CONDUIT

NOTE: PLACE HANGER ATTACHMENTS AT INTERVALS OF UP TO 10 FT.

** PROVIDE LAP LENGTHS AT THIS LOCATION FOR BARS 404, 501, 505, & 800. LAP BARS 500 AT MID BAY BETWEEN BEAMS 5 AND 6. FOR LAP LENGTHS, SEE TABLE.

** LAP LENGTH TABLE	
BAR SERIES	MIN. LAP LENGTH
400	1'-9"
490	2'-0"
500	2'-2"
590	2'-7"
800	4'-7"
900	5'-9"

BRIDGE NO. 2

Moore and Associates Inc.
221 Beaver Ruin Road Suite 190
Norcross, Georgia 30071
Tel: (770) 263-5945

GEORGIA
DEPARTMENT OF TRANSPORTATION
PRECONSTRUCTION DIVISION-OFFICE OF BRIDGE DESIGN

DECK SECTIONS - SPAN 2
I-75 NB OVER BIG SHANTY CONNECTOR
COBB COUNTY CSSTP-0006-00(869)

NO SCALE OCTOBER 2008

SUPERVISED BY	DESIGNED BY	ENC	DRAWN BY	DAW	QUANTITIES BY	---
HISHAM H DEEB, PE	CHECKED BY	GSJ	CHECKED BY	ENC	CHECKED BY	---
DESIGN GROUP WEI						
APPROVED PVL						
BRIDGE SHEET 5 OF 16						

REVISIONS | BY | DATE

X.DGN

STATE	PROJECT NUMBER	SHEET NO.	TOTAL SHEETS
GA.	CSSTP-0006-00(869)		

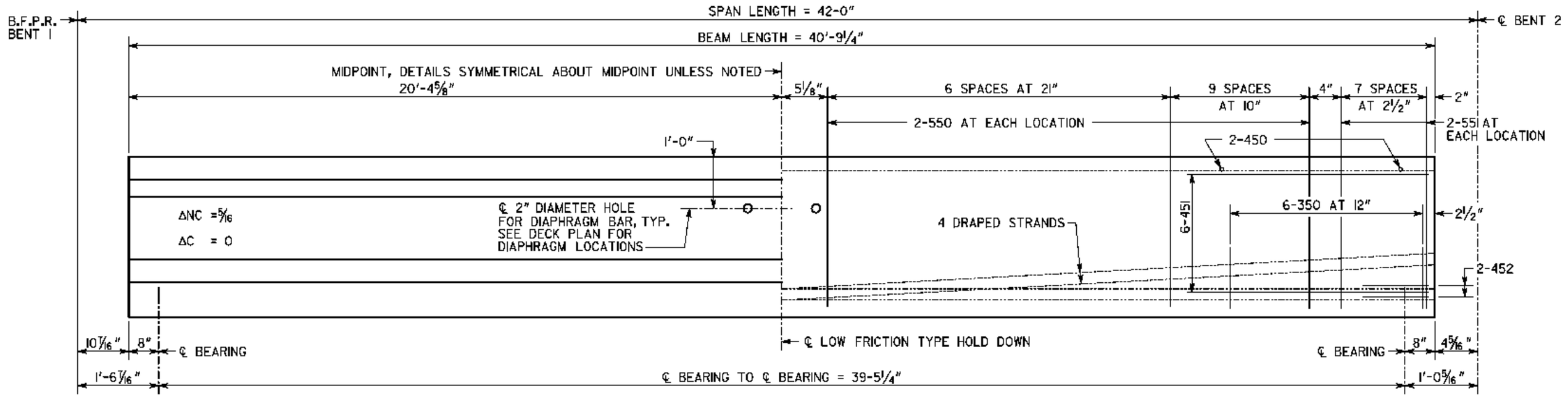

ELEVATION

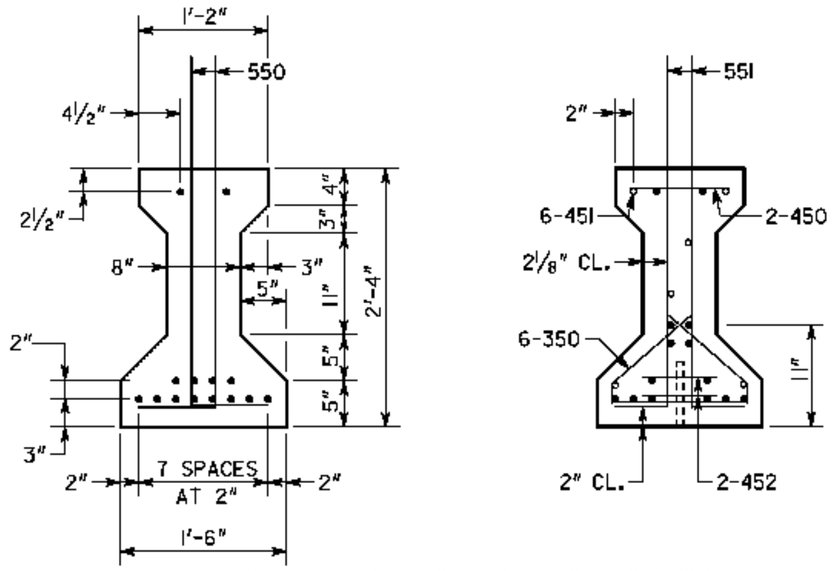

MAINTAIN 1" MINIMUM CLEARANCE UNLESS SHOWN.
• INDICATES ½" DIAMETER PRESTRESSED STRANDS.

SECTION AT MIDPOINT SECTION AT END

NOTES

1. BEAMS SHALL BE MAINTAINED IN AN UPRIGHT POSITION AT ALL TIMES AND SHALL BE PICKED UP WITHIN 3'-6" FROM THEIR ENDS. DISREGARDING THIS REQUIREMENT COULD LEAD TO COLLAPSE OF THE BEAM. PICK-UPS SHALL BE EMBEDDED TO WITHIN 4" OF THE BOTTOM OF THE BEAM. DETAILS OF PICK-UPS SHALL BE INCLUDED IN THE SHOP DRAWINGS.
2. CHAMFER EDGES OF BEAMS ½" OR ¾".
3. HORIZONTAL DIMENSIONS ARE IN PLACE DIMENSIONS. THE BEAM LENGTH INCLUDES THE ⅛" EPOXY MORTAR AT EACH END. SHOP DRAWINGS SHALL ADJUST HORIZONTAL DIMENSIONS FOR GRADE AND FABRICATION EFFECTS SUCH AS SHRINKAGE AND ELASTIC SHORTENING.
4. AT ℄ BEARING, FORM A 1½" DIAMETER X 7" DEEP HOLE AT THE FIXED ENDS AND A 4" X 1½" X 7" DEEP SLOT AT THE EXPANSION ENDS FOR A 1¼" DIAMETER SMOOTH DOWEL. SEE PLAN AND ELEVATION SHEET FOR LOCATION OF FIXED AND EXPANSION ENDS.
5. TOPS OF BEAMS SHALL BE ROUGH FLOATED AT APPROXIMATELY THE TIME OF INITIAL SET. ENTIRE TOP SHALL BE SCRUBBED TRANSVERSELY WITH A COARSE BRUSH TO REMOVE ALL LAITANCE AND TO PRODUCE A ROUGHENED SURFACE FOR BONDING TO THE SLAB. ROUGHENED SURFACE SHALL HAVE AN AMPLITUDE OF APPROXIMATELY ¼". CONCRETE FINS OR PROJECTIONS SHALL BE REMOVED TO PRODUCE A VERTICAL FACE AT THE EDGE OF THE BEAM.
6. NON-COMPOSITE DEAD LOAD DEFLECTION (ΔNC) AT THE MIDPOINT IS DUE TO THE WEIGHT OF THE SLAB AND COPING.
7. COMPOSITE DEAD LOAD DEFLECTION (ΔC) AT THE MIDPOINT IS DUE TO THE WEIGHT OF BARRIER.
8. STRANDS SHALL MEET ALL REQUIREMENTS OF ASTM A 416 GRADE 270.
9. PRESTRESSING DATA IS AS FOLLOWS:
   A. USE 14 - ½" DIAMETER SPECIAL LOW-RELAXATION (A = 0.167 SQ IN) STRANDS. PRETENSION STRANDS TO 33,818 LBS EACH.
   B. PRETENSIONED STRANDS SHALL BE RELEASED AFTER THE CONCRETE HAS REACHED A MINIMUM STRENGTH (f'_{ci}) OF 6,500 PSI.
   C. THE TOTAL JACKING FORCE OF PRETENSIONING IS 473,452 LBS.
   D. THE NET PRESTRESSING FORCE OF THE STRANDS AFTER LOSSES IS 387,500 LBS.
10. CONCRETE STRENGTH (f'_c) = 7,500 PSI.
11. PSC BEAM ALLOWABLE TENSION IS 520 PSI.

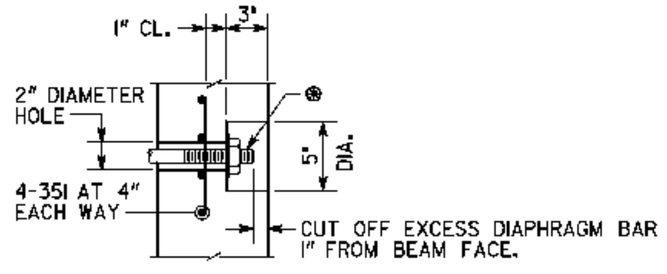

● DIAPHRAGM BAR SHALL BE A 1" DIAMETER PLAIN BAR, THREADED 5" ON EACH END, WITH ¼" X 3½" DIAMETER WASHERS AND HEX NUTS (ASTM A 709 GRADE 36).

DIAPHRAGM BAR SHALL BE TIGHTENED AS PER SUB-SECTION 507.3.05.C OF THE GEORGIA DOT SPECIFICATIONS.

AFTER EXCESS DIAPHRAGM BAR HAS BEEN CUT OFF, END OF DIAPHRAGM BAR, WASHER, AND NUT EXPOSED IN RECESS SHALL BE PAINTED WITH SPECIAL PROTECTIVE COATING NO. 2 P AS PER SECTION 535 OF THE GEORGIA DOT SPECIFICATIONS. AFTER PAINTING, THE RECESS SHALL BE FILLED WITH AN APPROVED EPOXY GROUT.

GALVANIZING OF DIAPHRAGM BAR AS PER SUB-SECTION 865.2.01.B.12 OF THE GEORGIA DOT SPECIFICATIONS IS NOT REQUIRED.

RECESS DETAIL FOR DIAPHRAGM BAR ENDS

REINFORCEMENT

ALL BAR DIMENSIONS ARE OUT TO OUT.

AT THE TOP OF THE BEAM, BARS 550 AND 551 SHALL BE FIELD BENT OR SHOP BENT 90°, SUCH THAT THE HORIZONTAL LEG EXTENDS BETWEEN TOP AND BOTTOM MATS OF SLAB REINFORCEMENT.

SLIGHTLY SHIFT OR SLOPE BARS 451 TO AVOID CONFLICT WITH STRANDS.

BARS 350 MAY BE FABRICATED IN TWO PARTS BY LAPPING HORIZONTAL SECTION BY 1'-0" MINIMUM.

PLACE BARS 452 WITH OPEN ENDS AWAY FROM BEAM ENDS.

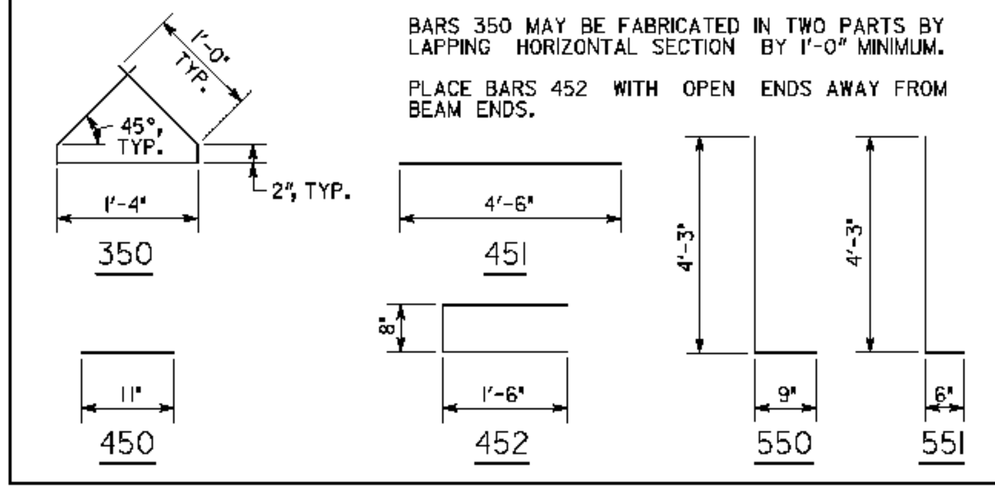

BRIDGE NO. 2

Moreland Altobelli Associates, Inc.
221 Beaver Ruin Road, Suite 190
Norcross, Georgia 30071
Tel.: (770) 263-9945

GEORGIA
DEPARTMENT OF TRANSPORTATION
PRECONSTRUCTION DIVISION-OFFICE OF BRIDGE DESIGN

TYPE I MOD PSC BEAM - SPAN I
INTERIOR BEAMS
I-75 NB OVER BIG SHANTY CONNECTOR
COBB COUNTY CSSTP-0006-00(869)

NO SCALE OCTOBER 2008

SUPERVISED BY	DESIGNED BY	ENC	DRAWN BY	DAW	QUANTITIES BY	
HISHAM H DEEB, PE	CHECKED BY	QSJ	CHECKED BY	ENC	CHECKED BY	
DESIGN GROUP WEI						
APPROVED PVL						
BRIDGE SHEET 6 OF 16						

DATE | REVISIONS | BY

X.DGN

STATE	PROJECT NUMBER	SHEET NO.	TOTAL SHEETS
GA.	CSSTP-0006-00(869)		

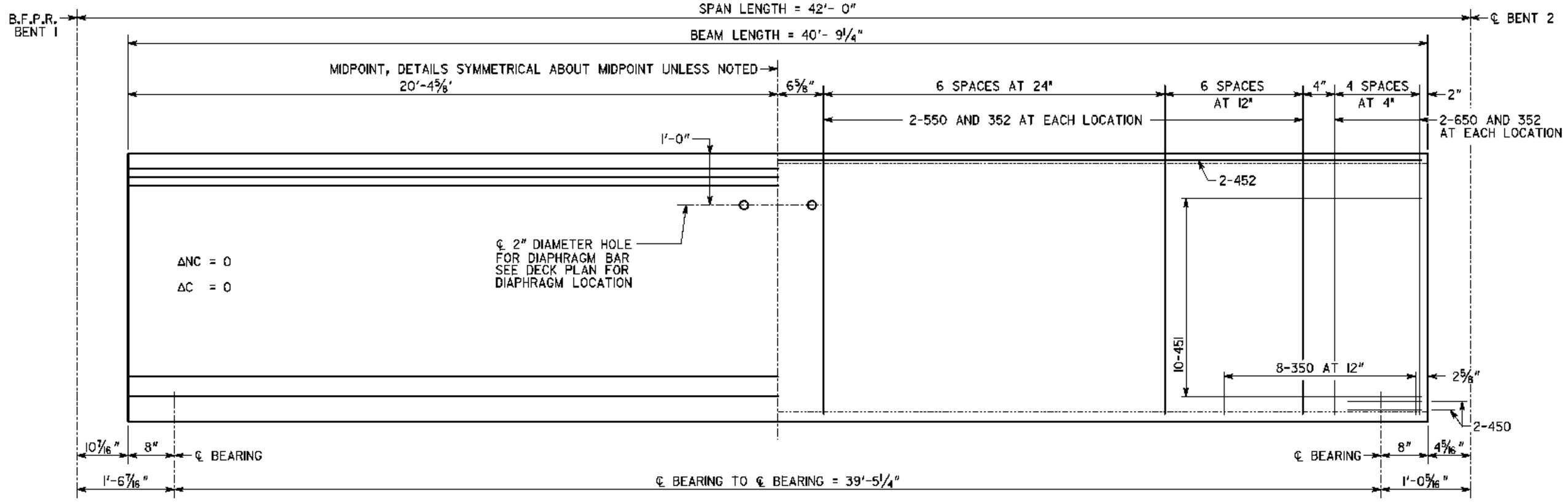

ELEVATION

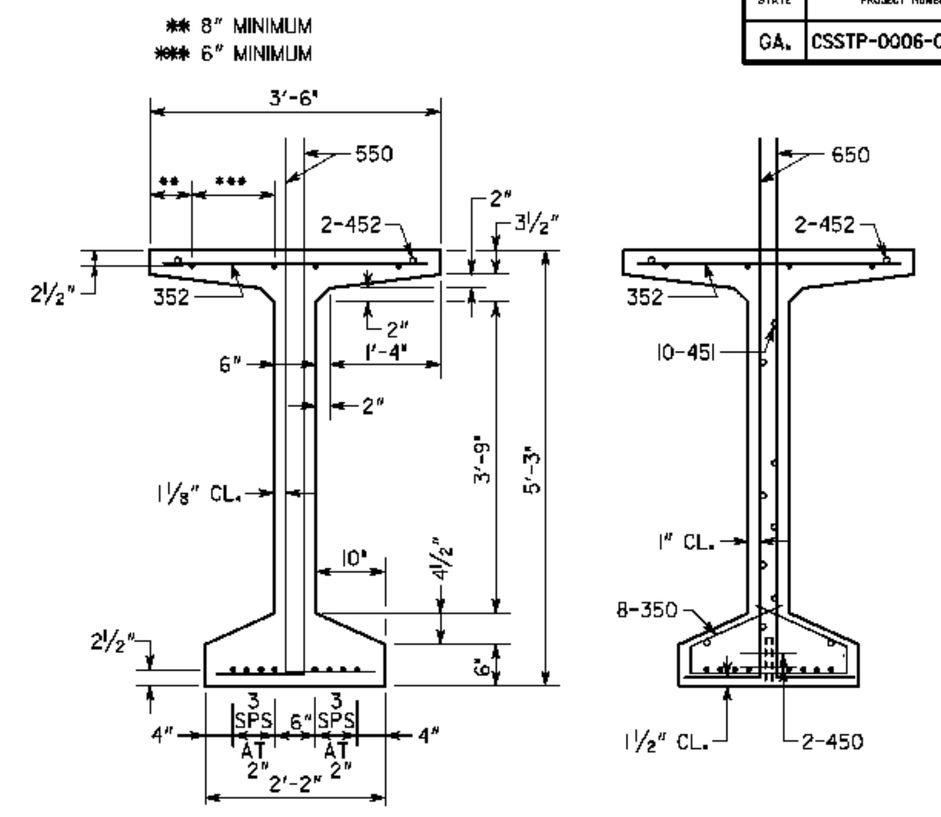

MAINTAIN 1" MINIMUM CLEARANCE UNLESS SHOWN.
• INDICATES ½" DIAMETER PRESTRESSED STRANDS.

SECTION AT MIDPOINT SECTION AT END

NOTES

1. BEAMS SHALL BE MAINTAINED IN AN UPRIGHT POSITION AT ALL TIMES AND SHALL BE PICKED UP WITHIN 7'-9" FROM THEIR ENDS. DISREGARDING THIS REQUIREMENT COULD LEAD TO COLLAPSE OF THE BEAM. PICK-UPS SHALL BE EMBEDDED TO WITHIN 4" OF THE BOTTOM OF THE BEAM. DETAILS OF PICK-UPS SHALL BE INCLUDED IN THE SHOP DRAWINGS.
2. CHAMFER EDGES OF BEAMS ½", ¾" OR 1".
3. HORIZONTAL DIMENSIONS ARE IN PLACE DIMENSIONS. THE BEAM LENGTH INCLUDES THE ⅛" EPOXY MORTAR AT EACH END. SHOP DRAWINGS SHALL ADJUST HORIZONTAL DIMENSIONS FOR GRADE AND FABRICATION EFFECTS SUCH AS SHRINKAGE AND ELASTIC SHORTENING.
4. AT ℄ BEARING, FORM A 1½" DIAMETER X 7" DEEP HOLE AT THE FIXED ENDS AND A 6" X 1½" X 7" DEEP SLOT AT THE EXPANSION ENDS FOR A 1¼" DIAMETER SMOOTH DOWEL. SEE PLAN AND ELEVATION SHEET FOR LOCATION OF FIXED AND EXPANSION ENDS.
5. TOPS OF BEAMS SHALL BE ROUGH FLOATED AT APPROXIMATELY THE TIME OF INITIAL SET. ENTIRE TOP SHALL BE SCRUBBED TRANSVERSELY WITH A COARSE BRUSH TO REMOVE ALL LAITANCE AND TO PRODUCE A ROUGHENED SURFACE FOR BONDING TO THE SLAB. ROUGHENED SURFACE SHALL HAVE AN AMPLITUDE OF APPROXIMATELY ¼". CONCRETE FINS OR PROJECTIONS SHALL BE REMOVED TO PRODUCE A VERTICAL FACE AT THE EDGE OF THE BEAM.
6. NON-COMPOSITE DEAD LOAD DEFLECTION (ΔNC) AT THE MIDPOINT IS DUE TO THE WEIGHT OF THE SLAB AND COPING.
7. COMPOSITE DEAD LOAD DEFLECTION (ΔC) AT THE MIDPOINT IS DUE TO THE WEIGHT OF BARRIER.
8. STRANDS SHALL MEET ALL REQUIREMENTS OF ASTM A 416 GRADE 270.
9. PRESTRESSING DATA IS AS FOLLOWS:
   A. USE 12 - ½" DIAMETER SPECIAL LOW-RELAXATION (A = 0.167 SQ IN) STRANDS. PRETENSION TOP FOUR (4) STRANDS TO 10,000 LBS EACH. PRETENSION BOTTOM STRANDS TO 33,818 LBS EACH.
   B. PRETENSIONED STRANDS SHALL BE RELEASED AFTER THE CONCRETE HAS REACHED A MINIMUM STRENGTH (f'_{ci}) OF 4,500 PSI.
   C. INCLUDING THE TOP STRANDS, THE TOTAL JACKING FORCE OF PRETENSIONING IS 310,544 LBS.
   D. INCLUDING THE TOP STRANDS, THE NET PRESTRESSING FORCE OF THE STRANDS AFTER ALL LOSSES IS 265,785 LBS.
10. CONCRETE STRENGTH (f'_c) = 5,500 PSI.
11. PSC BEAM ALLOWABLE TENSION IS 445 PSI.

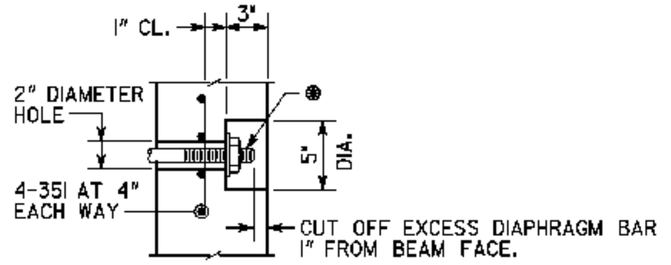

⑧ DIAPHRAGM BAR SHALL BE A 1" DIAMETER PLAIN BAR, THREADED 5" ON EACH END, WITH ¼" X 3½" DIAMETER WASHERS AND HEX NUTS (ASTM A 709 GRADE 36).

DIAPHRAGM BAR SHALL BE TIGHTENED AS PER SUB-SECTION 507.3.05.C OF THE GEORGIA DOT SPECIFICATIONS.

AFTER EXCESS DIAPHRAGM BAR HAS BEEN CUT OFF, END OF DIAPHRAGM BAR, WASHER, AND NUT EXPOSED IN RECESS SHALL BE PAINTED WITH SPECIAL PROTECTIVE COATING NO. 2 P AS PER SECTION 535 OF THE GEORGIA DOT SPECIFICATIONS. AFTER PAINTING, THE RECESS SHALL BE FILLED WITH AN APPROVED EPOXY GROUT.

GALVANIZING OF DIAPHRAGM BAR AS PER SUB-SECTION 865.2.01.B.12 OF THE GEORGIA DOT SPECIFICATIONS IS NOT REQUIRED.

RECESS DETAIL FOR DIAPHRAGM BAR ENDS

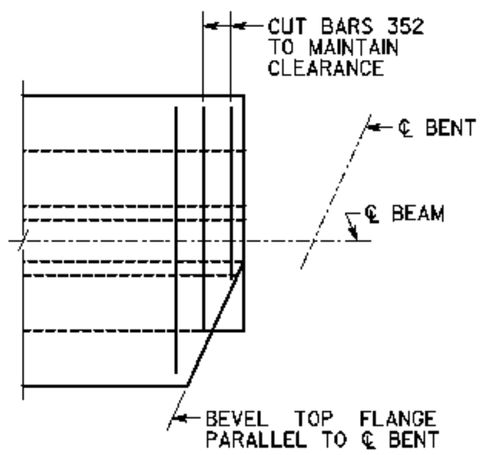

BEVEL DETAILS

REINFORCEMENT

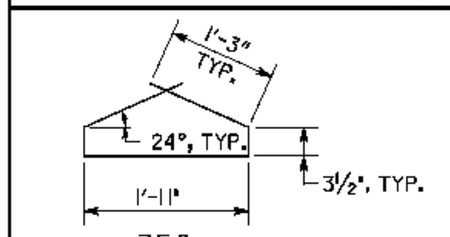

350

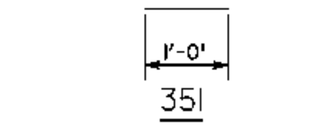

351

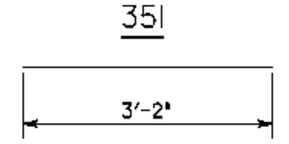

352

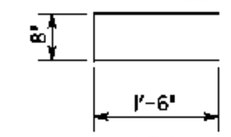

450

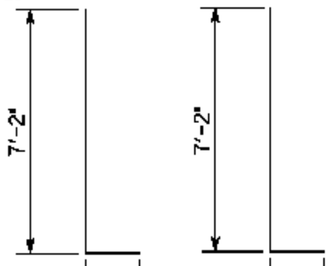

451 452 550 650

ALL BAR DIMENSIONS ARE OUT TO OUT.

AT THE TOP OF THE BEAM, BARS 550 AND 650 SHALL BE FIELD BENT OR SHOP BENT 90°, SUCH THAT THE HORIZONTAL LEG EXTENDS BETWEEN TOP AND BOTTOM MATS OF SLAB REINFORCEMENT.

SLIGHTLY SHIFT OR SLOPE BARS 451 TO AVOID CONFLICT WITH STRANDS.

BARS 350 MAY BE FABRICATED IN TWO PARTS BY LAPPING HORIZONTAL SECTION BY 1'-0" MINIMUM.

PLACE BARS 450 WITH OPEN ENDS AWAY FROM BEAM ENDS.

BRIDGE NO. 2

Moreland Altobelli Associates, Inc.
2211 Beaver Ruin Road Suite 190
Norcross, Georgia 30071
Tel.: (770) 263-9346

GEORGIA
DEPARTMENT OF TRANSPORTATION
PRECONSTRUCTION DIVISION-OFFICE OF BRIDGE DESIGN

BULB TEE, 63 IN PSC BEAM - SPAN I
FASCIA BEAMS
I-75 NB OVER BIG SHANTY CONNECTOR
COBB COUNTY CSSTP-0006-00(869)

NO SCALE OCTOBER 2008

DESIGNED BY	ENC	DRAWN BY	DAW	QUANTITIES BY	
CHECKED BY	GSJ	CHECKED BY	ENC	CHECKED BY	

DATE	REVISIONS	BY

SUPERVISED BY HISHAM H DEEB, PE
DESIGN GROUP WEI
APPROVED PVL
BRIDGE SHEET 7 OF 16

X.DGN

STATE	PROJECT NUMBER	SHEET NO.	TOTAL SHEETS
GA.	CSSTP-0006-00(869)		

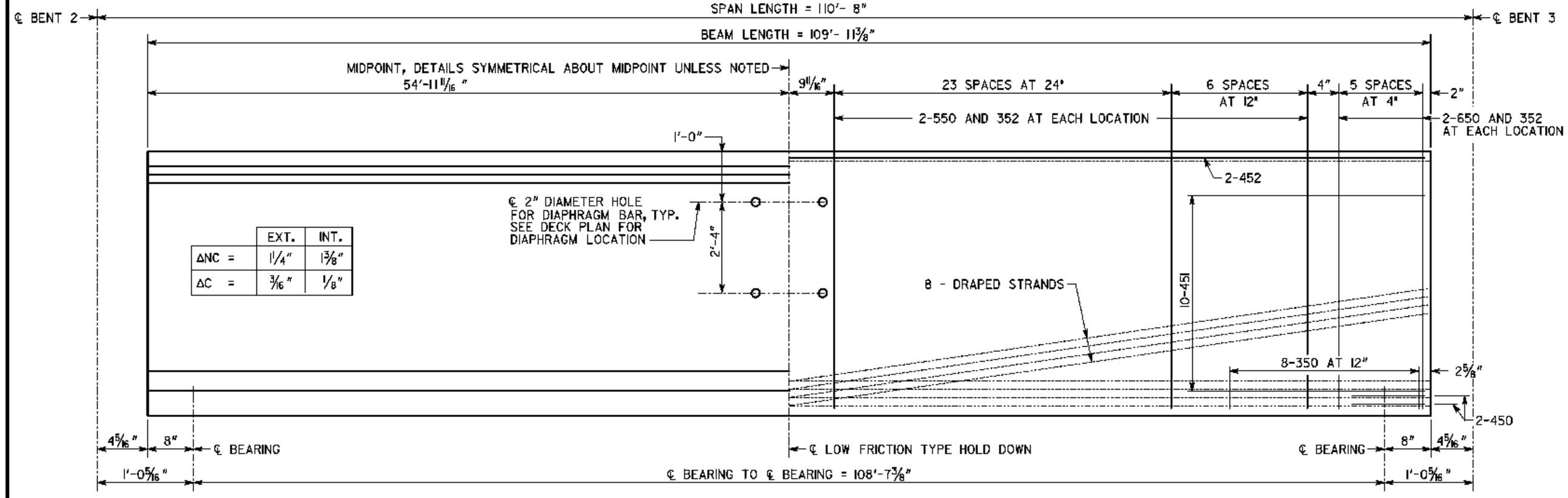

ELEVATION

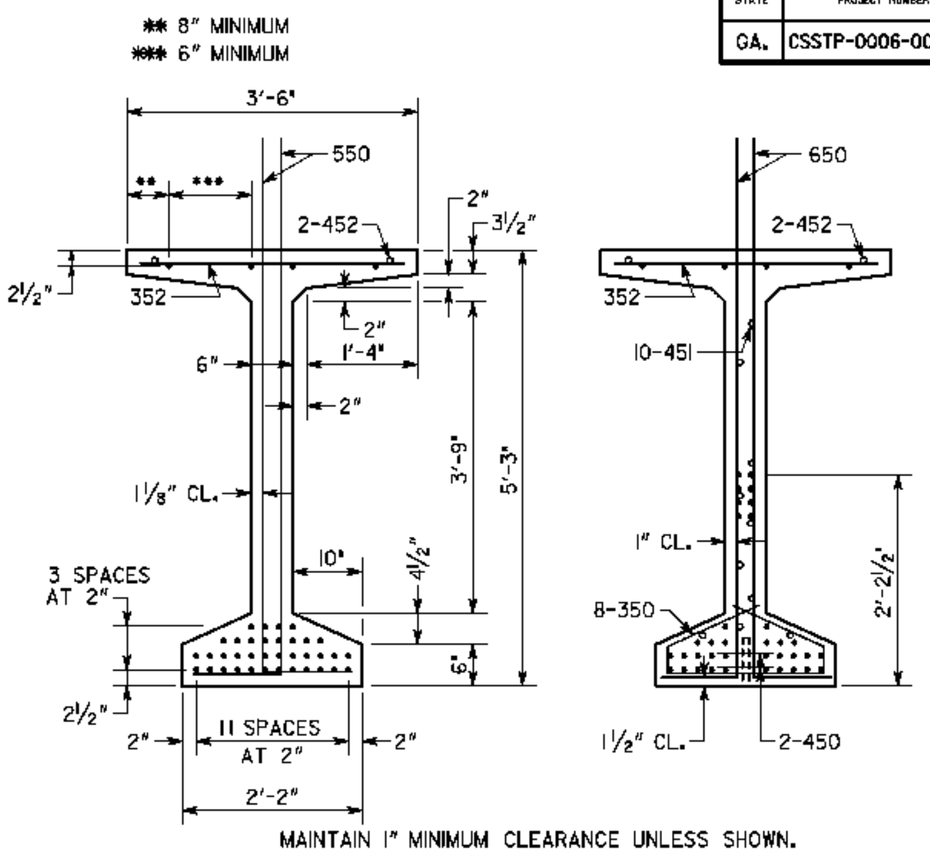

MAINTAIN 1" MINIMUM CLEARANCE UNLESS SHOWN.
• INDICATES 1/2" DIAMETER PRESTRESSED STRANDS.

SECTION AT MIDPOINT SECTION AT END

NOTES

1. BEAMS SHALL BE MAINTAINED IN AN UPRIGHT POSITION AT ALL TIMES AND SHALL BE PICKED UP WITHIN 7'-9" FROM THEIR ENDS. DISREGARDING THIS REQUIREMENT COULD LEAD TO COLLAPSE OF THE BEAM. PICK-UPS SHALL BE EMBEDDED TO WITHIN 4" OF THE BOTTOM OF THE BEAM. DETAILS OF PICK-UPS SHALL BE INCLUDED IN THE SHOP DRAWINGS.
2. CHAMFER EDGES OF BEAMS 1/2", 3/4" OR 1".
3. HORIZONTAL DIMENSIONS ARE IN PLACE DIMENSIONS. THE BEAM LENGTH INCLUDES THE 1/8" EPOXY MORTAR AT EACH END. SHOP DRAWINGS SHALL ADJUST HORIZONTAL DIMENSIONS FOR GRADE AND FABRICATION EFFECTS SUCH AS SHRINKAGE AND ELASTIC SHORTENING.
4. AT ℄ BEARING, FORM A 1 1/2" DIAMETER X 7" DEEP HOLE AT THE FIXED ENDS AND A 6" X 1 1/2" X 7" DEEP SLOT AT THE EXPANSION ENDS FOR A 1 1/4" DIAMETER SMOOTH DOWEL. SEE PLAN AND ELEVATION SHEET FOR LOCATION OF FIXED AND EXPANSION ENDS.
5. TOPS OF BEAMS SHALL BE ROUGH FLOATED AT APPROXIMATELY THE TIME OF INITIAL SET. ENTIRE TOP SHALL BE SCRUBBED TRANSVERSELY WITH A COARSE BRUSH TO REMOVE ALL LAITANCE AND TO PRODUCE A ROUGHENED SURFACE FOR BONDING TO THE SLAB. ROUGHENED SURFACE SHALL HAVE AN AMPLITUDE OF APPROXIMATELY 1/4". CONCRETE FINS OR PROJECTIONS SHALL BE REMOVED TO PRODUCE A VERTICAL FACE AT THE EDGE OF THE BEAM.
6. NON-COMPOSITE DEAD LOAD DEFLECTION (ΔNC) AT THE MIDPOINT IS DUE TO THE WEIGHT OF THE SLAB AND COPING.
7. COMPOSITE DEAD LOAD DEFLECTION (ΔC) AT THE MIDPOINT IS DUE TO THE WEIGHT OF BARRIER.
8. STRANDS SHALL MEET ALL REQUIREMENTS OF ASTM A 416 GRADE 270.
9. PRESTRESSING DATA IS AS FOLLOWS:
   A. USE 40 - 1/2" DIAMETER SPECIAL LOW-RELAXATION (A = 0.167 SQ IN) STRANDS. PRETENSION TOP FOUR (4) STRANDS TO 10,000 LBS EACH. PRETENSION BOTTOM STRANDS TO 33,818 LBS EACH.
   B. PRETENSIONED STRANDS SHALL BE RELEASED AFTER THE CONCRETE HAS REACHED A MINIMUM STRENGTH (f'_{ci}) OF 6,000 PSI.
   C. INCLUDING THE TOP STRANDS, THE TOTAL JACKING FORCE OF PRETENSIONING IS 1,257,448 LBS.
   D. INCLUDING THE TOP STRANDS, THE NET PRESTRESSING FORCE OF THE STRANDS AFTER ALL LOSSES IS 944,831LBS.
10. CONCRETE STRENGTH (f'_c) = 7,000 PSI.
11. PSC BEAM ALLOWABLE TENSION IS 502 PSI.

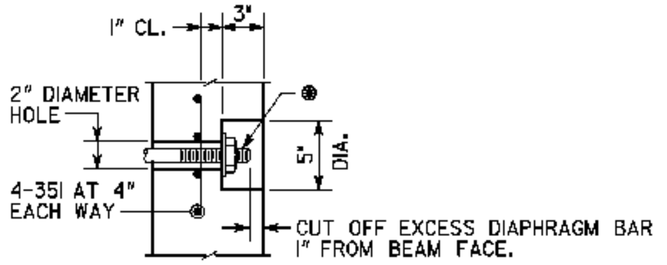

⊛ DIAPHRAGM BAR SHALL BE A 1" DIAMETER PLAIN BAR, THREADED 5" ON EACH END, WITH 1/4" X 3 1/2" DIAMETER WASHERS AND HEX NUTS (ASTM A 709 GRADE 36).

DIAPHRAGM BAR SHALL BE TIGHTENED AS PER SUB-SECTION 507.3.05.C OF THE GEORGIA DOT SPECIFICATIONS.

AFTER EXCESS DIAPHRAGM BAR HAS BEEN CUT OFF, END OF DIAPHRAGM BAR, WASHER, AND NUT EXPOSED IN RECESS SHALL BE PAINTED WITH SPECIAL PROTECTIVE COATING NO. 2 P AS PER SECTION 535 OF THE GEORGIA DOT SPECIFICATIONS. AFTER PAINTING, THE RECESS SHALL BE FILLED WITH AN APPROVED EPOXY GROUT.

GALVANIZING OF DIAPHRAGM BAR AS PER SUB-SECTION 865.2.01.B.12 OF THE GEORGIA DOT SPECIFICATIONS IS NOT REQUIRED.

RECESS DETAIL FOR DIAPHRAGM BAR ENDS

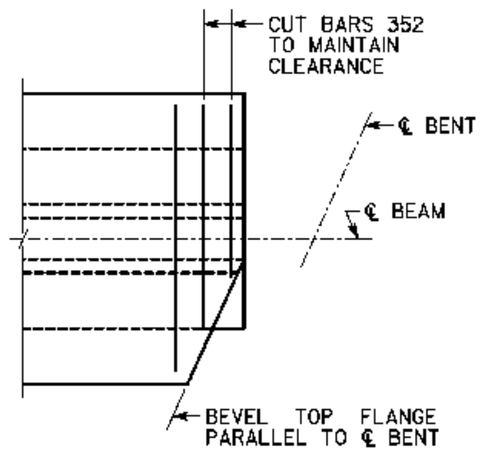

BEVEL DETAILS

REINFORCEMENT

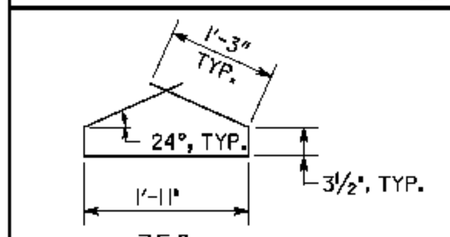

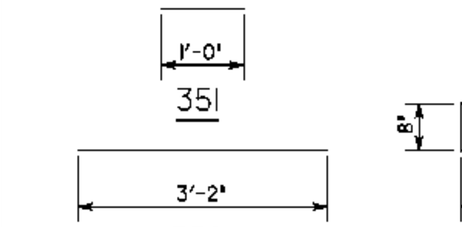

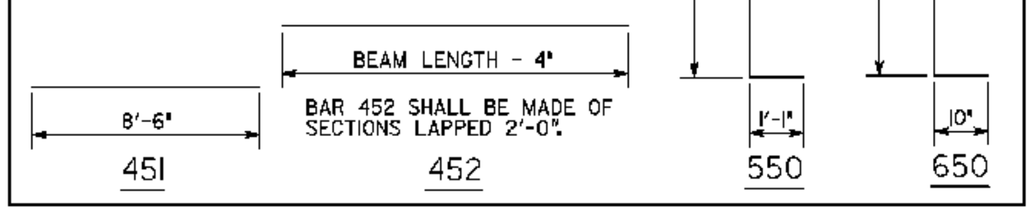

ALL BAR DIMENSIONS ARE OUT TO OUT.

AT THE TOP OF THE BEAM, BARS 550 AND 650 SHALL BE FIELD BENT OR SHOP BENT 90°, SUCH THAT THE HORIZONTAL LEG EXTENDS BETWEEN TOP AND BOTTOM MATS OF SLAB REINFORCEMENT.

SLIGHTLY SHIFT OR SLOPE BARS 451 TO AVOID CONFLICT WITH STRANDS.

BARS 350 MAY BE FABRICATED IN TWO PARTS BY LAPPING HORIZONTAL SECTION BY 1'-0" MINIMUM.

PLACE BARS 450 WITH OPEN ENDS AWAY FROM BEAM ENDS.

BRIDGE NO. 2

Morehard Alsobrook Associates, Inc.
2211 Beaver Ruin Road Suite 190
Norcross, Georgia 30071
Tel.: (770) 263-9346

GEORGIA
DEPARTMENT OF TRANSPORTATION
PRECONSTRUCTION DIVISION-OFFICE OF BRIDGE DESIGN

BULB TEE, 63 IN PSC BEAMS - SPAN 2
I-75 NB OVER BIG SHANTY CONNECTOR
COBB COUNTY CSSTP-0006-00(869)

NO SCALE OCTOBER 2008

SUPERVISED BY	DESIGNED BY	ENC	DRAWN BY	DAW	QUANTITIES BY	
HISHAM H DEEB, PE	CHECKED BY	GSJ	CHECKED BY	ENC	CHECKED BY	
DESIGN GROUP WEI						
APPROVED PVL						
BRIDGE SHEET 8 OF 16						

DATE | REVISIONS | BY

X.DGN

STATE	PROJECT NUMBER	SHEET NO.	TOTAL SHEETS
GA.	CSSTP-0006-00(869)		

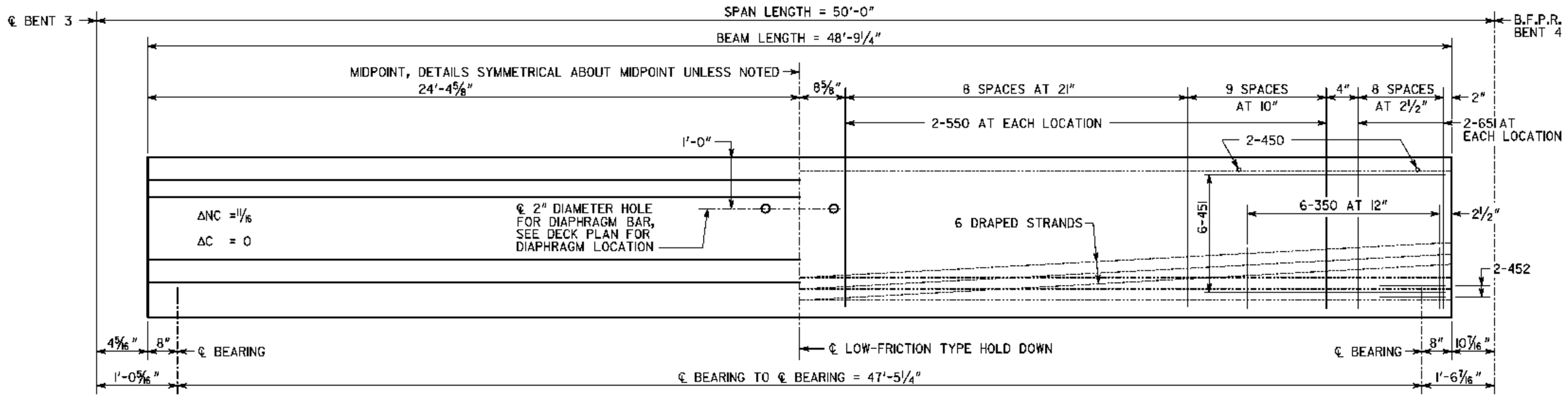

ELEVATION

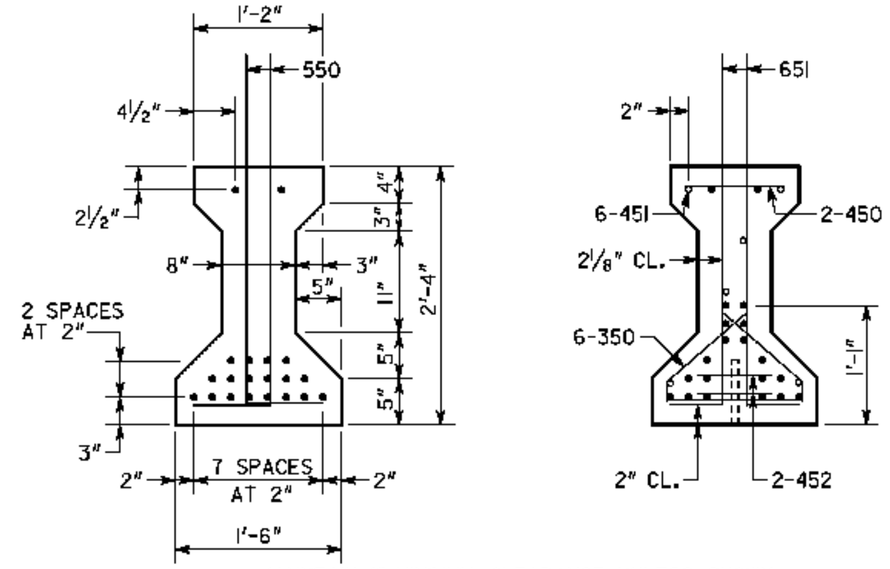

MAINTAIN 1" MINIMUM CLEARANCE UNLESS SHOWN.
• INDICATES ½" DIAMETER PRESTRESSED STRANDS.

SECTION AT MIDPOINT SECTION AT END

NOTES

1. BEAMS SHALL BE MAINTAINED IN AN UPRIGHT POSITION AT ALL TIMES AND SHALL BE PICKED UP WITHIN 3'-6" FROM THEIR ENDS. DISREGARDING THIS REQUIREMENT COULD LEAD TO COLLAPSE OF THE BEAM. PICK-UPS SHALL BE EMBEDDED TO WITHIN 4" OF THE BOTTOM OF THE BEAM. DETAILS OF PICK-UPS SHALL BE INCLUDED IN THE SHOP DRAWINGS.
2. CHAMFER EDGES OF BEAMS ½" OR ¾".
3. HORIZONTAL DIMENSIONS ARE IN PLACE DIMENSIONS. THE BEAM LENGTH INCLUDES THE ⅛" EPOXY MORTAR AT EACH END. SHOP DRAWINGS SHALL ADJUST HORIZONTAL DIMENSIONS FOR GRADE AND FABRICATION EFFECTS SUCH AS SHRINKAGE AND ELASTIC SHORTENING.
4. AT ℄ BEARING, FORM A 1½" DIAMETER X 7" DEEP HOLE AT THE FIXED ENDS AND A 4" X 1½" X 7" DEEP SLOT AT THE EXPANSION ENDS FOR A 1¼" DIAMETER SMOOTH DOWEL. SEE PLAN AND ELEVATION SHEET FOR LOCATION OF FIXED AND EXPANSION ENDS.
5. TOPS OF BEAMS SHALL BE ROUGH FLOATED AT APPROXIMATELY THE TIME OF INITIAL SET. ENTIRE TOP SHALL BE SCRUBBED TRANSVERSELY WITH A COARSE BRUSH TO REMOVE ALL LAITANCE AND TO PRODUCE A ROUGHENED SURFACE FOR BONDING TO THE SLAB. ROUGHENED SURFACE SHALL HAVE AN AMPLITUDE OF APPROXIMATELY ¼". CONCRETE FINS OR PROJECTIONS SHALL BE REMOVED TO PRODUCE A VERTICAL FACE AT THE EDGE OF THE BEAM.
6. NON-COMPOSITE DEAD LOAD DEFLECTION (ΔNC) AT THE MIDPOINT IS DUE TO THE WEIGHT OF THE SLAB AND COPING.
7. COMPOSITE DEAD LOAD DEFLECTION (ΔC) AT THE MIDPOINT IS DUE TO THE WEIGHT OF BARRIER.
8. STRANDS SHALL MEET ALL REQUIREMENTS OF ASTM A 416 GRADE 270.
9. PRESTRESSING DATA IS AS FOLLOWS:
   A. USE 20 - ½" DIAMETER SPECIAL LOW-RELAXATION (A = 0.167 SQ IN) STRANDS. PRETENSION STRANDS TO 33,818 LBS EACH.
   B. PRETENSIONED STRANDS SHALL BE RELEASED AFTER THE CONCRETE HAS REACHED A MINIMUM STRENGTH (f'_{ci}) OF 6,500 PSI.
   C. THE TOTAL JACKING FORCE OF PRETENSIONING IS 676,360 LBS.
   D. THE NET PRESTRESSING FORCE OF THE STRANDS AFTER LOSSES IS 519,049 LBS.
10. CONCRETE STRENGTH (f'_c) = 7,500 PSI.
11. PSC BEAM ALLOWABLE TENSION IS 520 PSI.

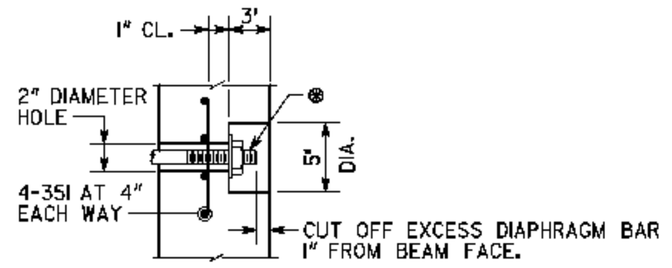

● DIAPHRAGM BAR SHALL BE A 1" DIAMETER PLAIN BAR, THREADED 5" ON EACH END, WITH ¼" X 3½" DIAMETER WASHERS AND HEX NUTS (ASTM A 709 GRADE 36).

DIAPHRAGM BAR SHALL BE TIGHTENED AS PER SUB-SECTION 507.3.05.C OF THE GEORGIA DOT SPECIFICATIONS.

AFTER EXCESS DIAPHRAGM BAR HAS BEEN CUT OFF, END OF DIAPHRAGM BAR, WASHER, AND NUT EXPOSED IN RECESS SHALL BE PAINTED WITH SPECIAL PROTECTIVE COATING NO. 2 P AS PER SECTION 535 OF THE GEORGIA DOT SPECIFICATIONS. AFTER PAINTING, THE RECESS SHALL BE FILLED WITH AN APPROVED EPOXY GROUT.

GALVANIZING OF DIAPHRAGM BAR AS PER SUB-SECTION 865.2.01.B.12 OF THE GEORGIA DOT SPECIFICATIONS IS NOT REQUIRED.

RECESS DETAIL FOR DIAPHRAGM BAR ENDS

REINFORCEMENT

ALL BAR DIMENSIONS ARE OUT TO OUT.

AT THE TOP OF THE BEAM, BARS 550 AND 651 SHALL BE FIELD BENT OR SHOP BENT 90°, SUCH THAT THE HORIZONTAL LEG EXTENDS BETWEEN TOP AND BOTTOM MATS OF SLAB REINFORCEMENT.

SLIGHTLY SHIFT OR SLOPE BARS 451 TO AVOID CONFLICT WITH STRANDS.

BARS 350 MAY BE FABRICATED IN TWO PARTS BY LAPPING HORIZONTAL SECTION BY 1'-0" MINIMUM.

PLACE BARS 452 WITH OPEN ENDS AWAY FROM BEAM ENDS.

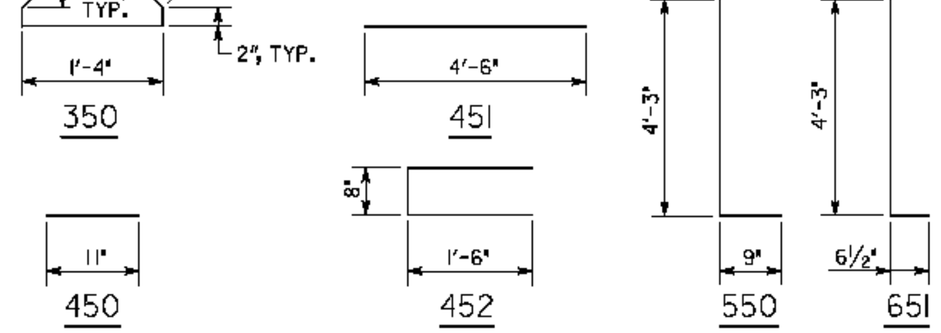

BRIDGE NO. 2

Moreland Altobelli Associates, Inc.
221 Beaver Ruin Road, Suite 190
Norcross, Georgia 30071
Tel.: (770) 263-9945

GEORGIA
DEPARTMENT OF TRANSPORTATION
PRECONSTRUCTION DIVISION-OFFICE OF BRIDGE DESIGN

TYPE I MOD PSC BEAM - SPAN 3
INTERIOR BEAM
I-75 NB OVER BIG SHANTY CONNECTOR
COBB COUNTY CSSTP-0006-00(869)

NO SCALE OCTOBER 2008

DESIGNED BY	ENC	DRAWN BY	DAW	QUANTITIES BY	
CHECKED BY	QSJ	CHECKED BY	ENC	CHECKED BY	

DATE	BY	REVISIONS

SUPERVISED BY
HISHAM H DEEB, PE
DESIGN GROUP
WEI
APPROVED
PVL
BRIDGE SHEET
9 OF 16

X.DGN

STATE	PROJECT NUMBER	SHEET NO.	TOTAL SHEETS
GA.	CSSTP-0006-00(869)		

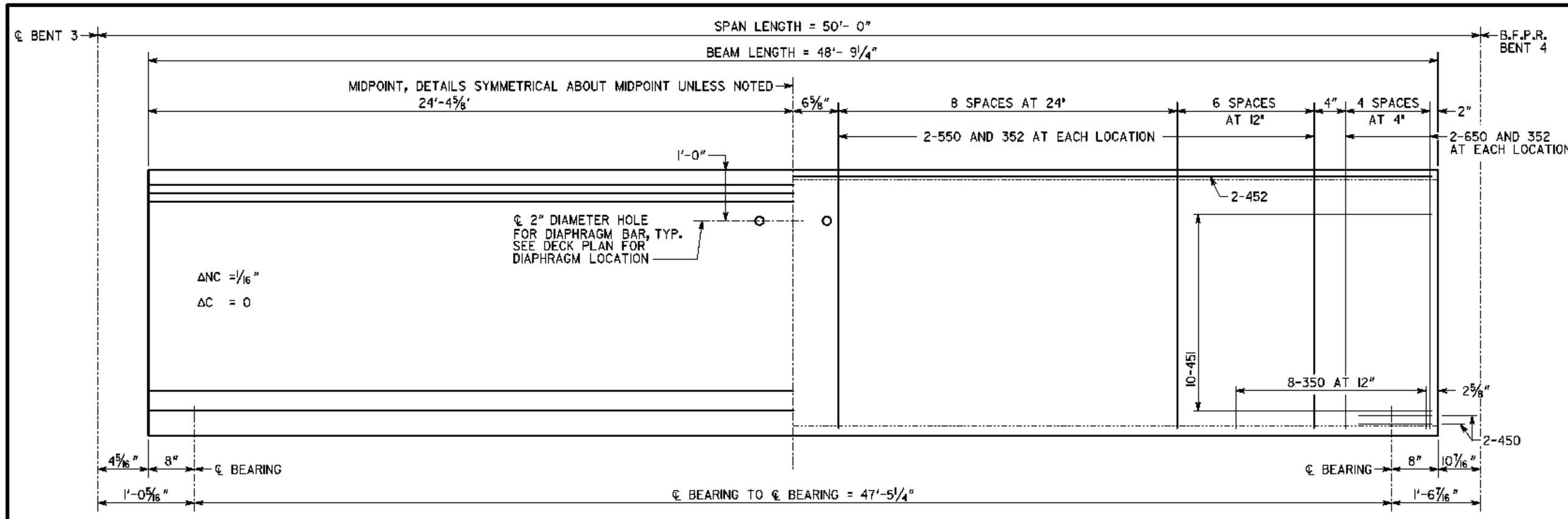

ELEVATION

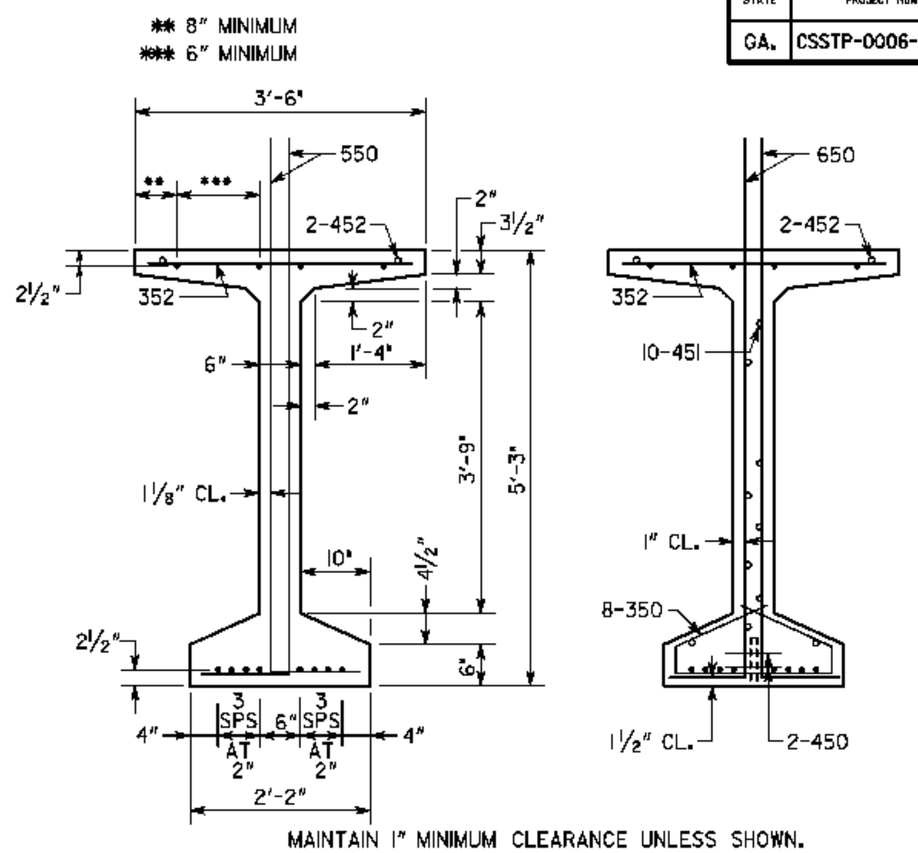

MAINTAIN 1" MINIMUM CLEARANCE UNLESS SHOWN.
• INDICATES ½" DIAMETER PRESTRESSED STRANDS.

SECTION AT MIDPOINT SECTION AT END

NOTES

1. BEAMS SHALL BE MAINTAINED IN AN UPRIGHT POSITION AT ALL TIMES AND SHALL BE PICKED UP WITHIN 7'-9" FROM THEIR ENDS. DISREGARDING THIS REQUIREMENT COULD LEAD TO COLLAPSE OF THE BEAM. PICK-UPS SHALL BE EMBEDDED TO WITHIN 4" OF THE BOTTOM OF THE BEAM. DETAILS OF PICK-UPS SHALL BE INCLUDED IN THE SHOP DRAWINGS.
2. CHAMFER EDGES OF BEAMS ½", ¾" OR 1".
3. HORIZONTAL DIMENSIONS ARE IN PLACE DIMENSIONS. THE BEAM LENGTH INCLUDES THE ⅛" EPOXY MORTAR AT EACH END. SHOP DRAWINGS SHALL ADJUST HORIZONTAL DIMENSIONS FOR GRADE AND FABRICATION EFFECTS SUCH AS SHRINKAGE AND ELASTIC SHORTENING.
4. AT ℄ BEARING, FORM A 1½" DIAMETER X 7" DEEP HOLE AT THE FIXED ENDS AND A 6" X 1½" X 7" DEEP SLOT AT THE EXPANSION ENDS FOR A 1¼" DIAMETER SMOOTH DOWEL. SEE PLAN AND ELEVATION SHEET FOR LOCATION OF FIXED AND EXPANSION ENDS.
5. TOPS OF BEAMS SHALL BE ROUGH FLOATED AT APPROXIMATELY THE TIME OF INITIAL SET. ENTIRE TOP SHALL BE SCRUBBED TRANSVERSELY WITH A COARSE BRUSH TO REMOVE ALL LAITANCE AND TO PRODUCE A ROUGHENED SURFACE FOR BONDING TO THE SLAB. ROUGHENED SURFACE SHALL HAVE AN AMPLITUDE OF APPROXIMATELY ¼". CONCRETE FINS OR PROJECTIONS SHALL BE REMOVED TO PRODUCE A VERTICAL FACE AT THE EDGE OF THE BEAM.
6. NON-COMPOSITE DEAD LOAD DEFLECTION (ΔNC) AT THE MIDPOINT IS DUE TO THE WEIGHT OF THE SLAB AND COPING.
7. COMPOSITE DEAD LOAD DEFLECTION (ΔC) AT THE MIDPOINT IS DUE TO THE WEIGHT OF BARRIER.
8. STRANDS SHALL MEET ALL REQUIREMENTS OF ASTM A 416 GRADE 270.
9. PRESTRESSING DATA IS AS FOLLOWS:
   A. USE 12 - ½" DIAMETER SPECIAL LOW-RELAXATION (A = 0.167 SQ IN) STRANDS. PRETENSION TOP FOUR (4) STRANDS TO 10,000 LBS EACH. PRETENSION BOTTOM STRANDS TO 33,818 LBS EACH.
   B. PRETENSIONED STRANDS SHALL BE RELEASED AFTER THE CONCRETE HAS REACHED A MINIMUM STRENGTH (f'_{ci}) OF 4,500 PSI.
   C. INCLUDING THE TOP STRANDS, THE TOTAL JACKING FORCE OF PRETENSIONING IS 310,544 LBS.
   D. INCLUDING THE TOP STRANDS, THE NET PRESTRESSING FORCE OF THE STRANDS AFTER ALL LOSSES IS 268,079 LBS.
10. CONCRETE STRENGTH (f'_c) = 5,500 PSI.
11. PSC BEAM ALLOWABLE TENSION IS 445 PSI.

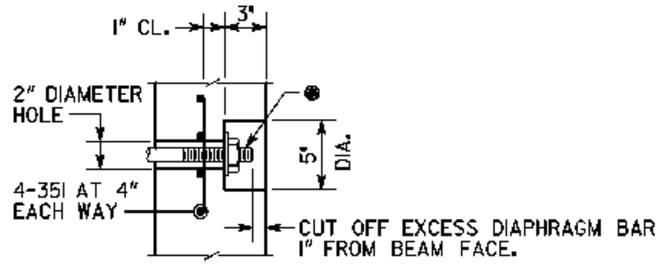

● DIAPHRAGM BAR SHALL BE A 1" DIAMETER PLAIN BAR, THREADED 5" ON EACH END, WITH ¼" X 3½" DIAMETER WASHERS AND HEX NUTS (ASTM A 709 GRADE 36).

DIAPHRAGM BAR SHALL BE TIGHTENED AS PER SUB-SECTION 507.3.05.C OF THE GEORGIA DOT SPECIFICATIONS.

AFTER EXCESS DIAPHRAGM BAR HAS BEEN CUT OFF, END OF DIAPHRAGM BAR, WASHER, AND NUT EXPOSED IN RECESS SHALL BE PAINTED WITH SPECIAL PROTECTIVE COATING NO. 2 P AS PER SECTION 535 OF THE GEORGIA DOT SPECIFICATIONS. AFTER PAINTING, THE RECESS SHALL BE FILLED WITH AN APPROVED EPOXY GROUT.

GALVANIZING OF DIAPHRAGM BAR AS PER SUB-SECTION 865.2.01.B.12 OF THE GEORGIA DOT SPECIFICATIONS IS NOT REQUIRED.

RECESS DETAIL FOR DIAPHRAGM BAR ENDS

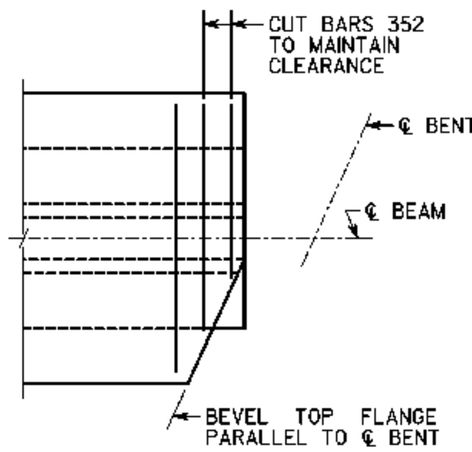

BEVEL DETAILS

REINFORCEMENT

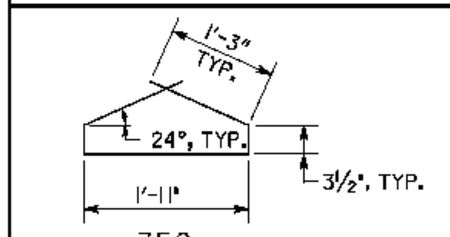

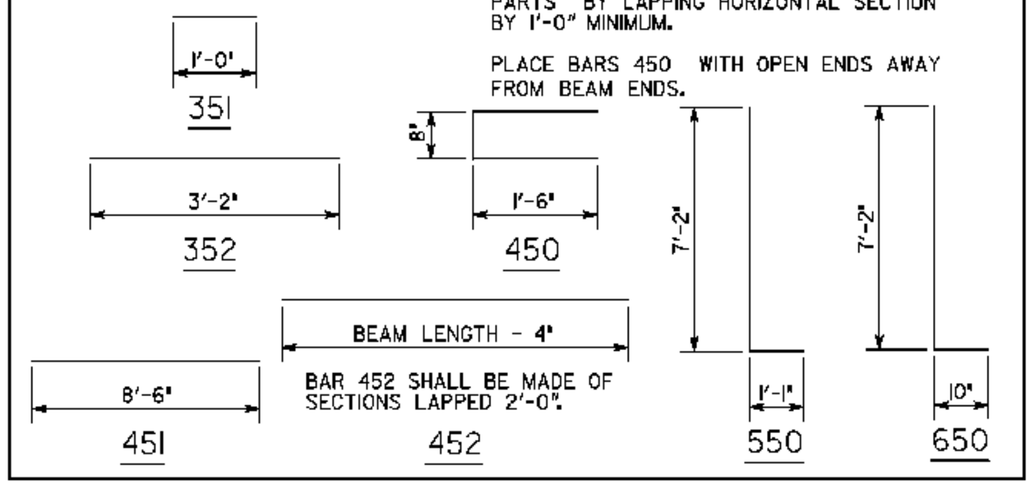

ALL BAR DIMENSIONS ARE OUT TO OUT.

AT THE TOP OF THE BEAM, BARS 550 AND 650 SHALL BE FIELD BENT OR SHOP BENT 90°, SUCH THAT THE HORIZONTAL LEG EXTENDS BETWEEN TOP AND BOTTOM MATS OF SLAB REINFORCEMENT.

SLIGHTLY SHIFT OR SLOPE BARS 451 TO AVOID CONFLICT WITH STRANDS.

BARS 350 MAY BE FABRICATED IN TWO PARTS BY LAPPING HORIZONTAL SECTION BY 1'-0" MINIMUM.

PLACE BARS 450 WITH OPEN ENDS AWAY FROM BEAM ENDS.

BRIDGE NO. 2

Moreland Altobelli Associates, Inc.
2211 Beaver Ruin Road Suite 190
Norcross, Georgia 30071
Tel.: (770) 263-5946

GEORGIA
DEPARTMENT OF TRANSPORTATION
PRECONSTRUCTION DIVISION-OFFICE OF BRIDGE DESIGN

BULB TEE, 63 IN PSC BEAM - SPAN 3
FASCIA BEAMS
I-75 NB OVER BIG SHANTY CONNECTOR
COBB COUNTY CSSTP-0006-00(869)

SUPERVISED BY	DESIGN GROUP	APPROVED	BRIDGE SHEET
HISHAM H DEEB, PE	WEI	PVL	10 OF 16

REVISIONS | BY | DATE

NO SCALE OCTOBER 2008

DESIGNED BY	ENC	DRAWN BY	DAW	QUANTITIES BY	
CHECKED BY	GSJ	CHECKED BY	ENC	CHECKED BY	

X.DGN

STATE	PROJECT NUMBER	SHEET NO.	TOTAL SHEETS
GA.	CSSTP-0006-00(869)		

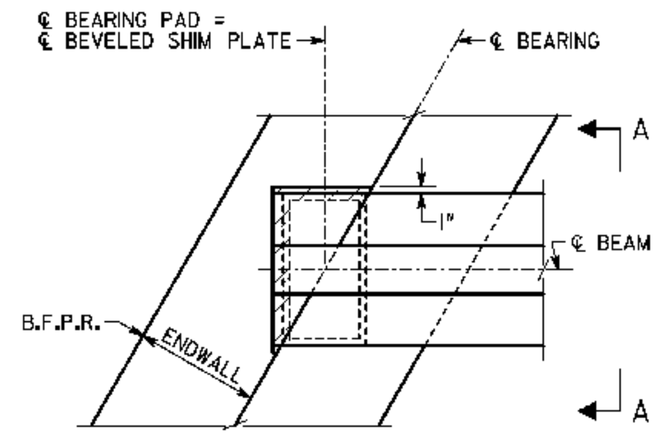

PLAN
BENT 1 SHOWN
BENT 4 SIMILAR

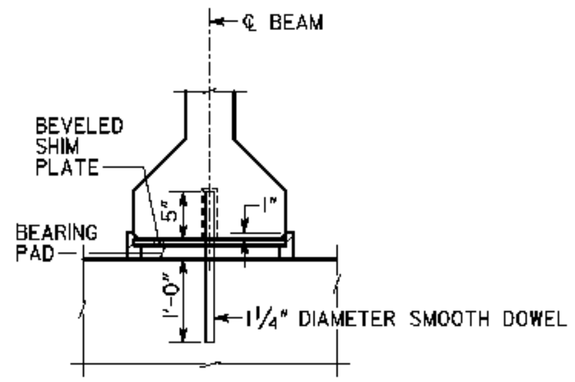

☐ PREFORMED FOAM JOINT FILLER SHALL BE IN ACCORDANCE WITH SUB-SECTION 833.2.10 OF THE GEORGIA DOT SPECIFICATIONS.

ENDWALL NOT SHOWN
SECTION A-A

NOTES

1) BEARING PADS HAVE BEEN DESIGNED ACCORDING TO AASHTO SPECIFICATIONS DIVISION I, SECTION 14.6.6 AND SHALL BE FURNISHED IN ACCORDANCE WITH AASHTO SPECIFICATIONS DIVISION II, SECTION 18.2, BEARINGS.

2) 1¼" DIAMETER SMOOTH DOWELS SHALL BE ASTM A 709 GRADE 36.

3) BEARING PADS SHALL BE MADE OF 60 DUROMETER HARDNESS NEOPRENE, GRADE 2 OR HIGHER.

4) 3" DIAMETER HOLE IN BEARING PADS MAY BE FORMED OR DRILLED.

5) BEARING PADS SHALL HAVE ¼" COVER ON THE TOP, BOTTOM, AND SIDES AND AROUND THE HOLE.

6) 3/16" LOAD PLATES AND 14 GAGE INTERNAL PLATE(S) (IF REQUIRED) SHALL BE ASTM A 709 GRADE 36 OR ASTM A 1011 GRADE 36.

7) NUMBER OF INTERNAL PLATES SHOWN FOR ILLUSTRATION PURPOSES ONLY. THE NUMBER OF INTERNAL PLATE(S) SPECIFIED SHALL BE EQUALLY SPACED BETWEEN LOAD PLATES.

8) USE OF 1½° MOLD DRAFT IS OPTIONAL.

9) BEVELED SHIM PLATES SHALL BE ASTM A 709 GRADE 36 AND SHALL BE GALVANIZED IN ACCORDANCE WITH ASTM A 123.

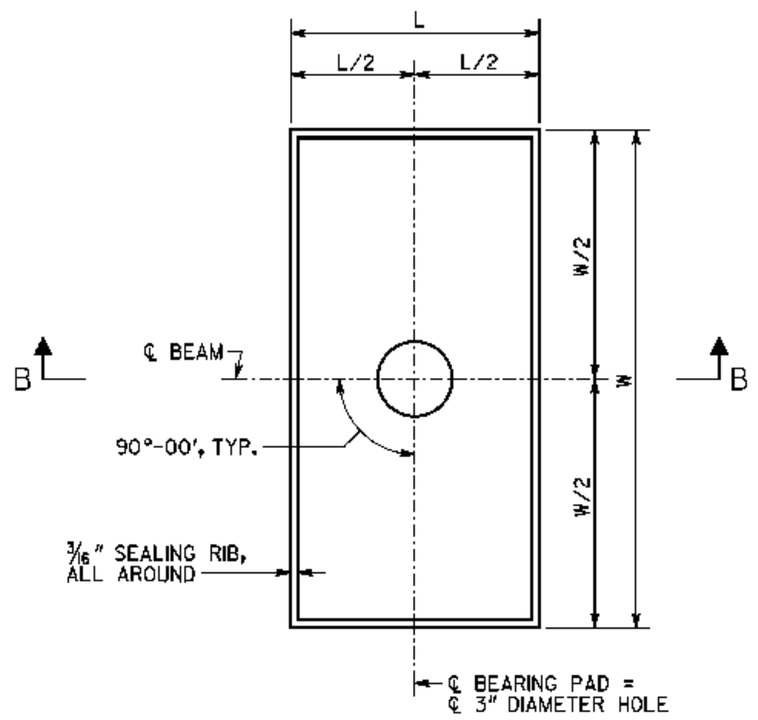

PLAN

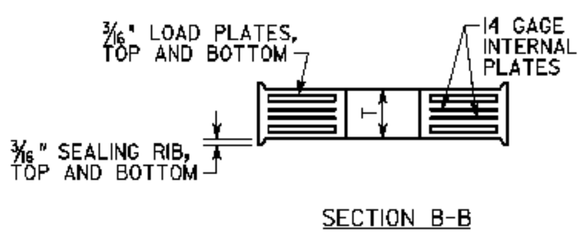

SECTION B-B

BEARING PAD

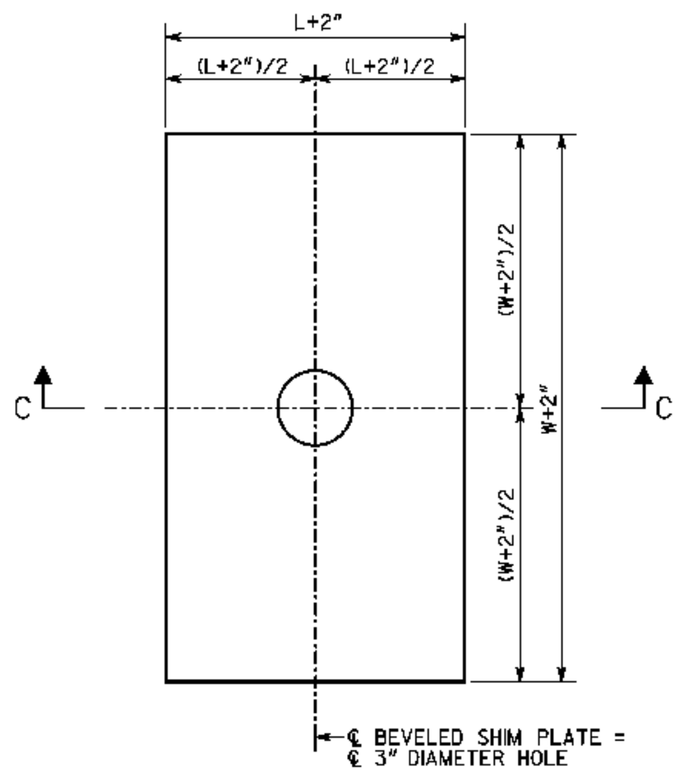

PLAN

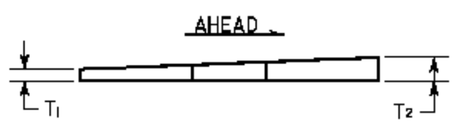

SECTION C-C

BEVELED SHIM PLATE

SPAN	BENT	BEAM MARK	BEARING PADS								BEVELED SHIM PLATES	
								DESIGN LOADS (KIPS)				
			W (IN)	L (IN)	T (IN)	NUMBER OF INTERNAL PLATE(S)	DESIGN SHEAR DEFLECTION (IN)	DEAD LOAD	LIVE LOAD (NO IMPACT)	DEAD LOAD + LIVE LOAD	T1 (IN)	T2 (IN)
1	1	1, 9	20	10	2¾	3	0.93	55	28	83	¼	⅝
		2-8	14	10	2¾	3	0.93	35	40	75	¼	⅝
	2 BK	1, 9	20	10	2¼	2	0.71	42	28	70	¼	⅝
		2-8	14	10	2¼	2	0.69	31	40	71	¼	⅝
2	2 AH	1, 9	20	12	2¼	2	0.71	107	33	140	¼	⅝
		2-8	20	12	2¼	2	0.69	113	47	160	¼	⅝
	3 BK	1, 9	20	12	2¼	2	0.00	107	33	140	¼	⅝
		2-8	20	12	2¼	2	0.00	113	47	160	¼	⅝
3	3 AH	1, 9	20	10	2¼	2	0.00	49	29	78	¼	⅝
		2-8	14	10	2¼	2	0.00	37	42	79	¼	⅝
	4	1, 9	20	10	2¼	2	0.27	62	29	91	¼	⅝
		2-8	14	10	2¼	2	0.32	41	42	83	¼	⅝

BRIDGE NO. 2

Morelock Aldridge Associates, Inc.
2211 Beaver Ruin Road Suite 190
Norcross, Georgia 30071
Tel.: (770) 263-5945

GEORGIA
DEPARTMENT OF TRANSPORTATION
PRECONSTRUCTION DIVISION-OFFICE OF BRIDGE DESIGN

BEARING DETAILS

I-75 NB OVER BIG SHANTY CONNECTOR

COBB COUNTY CSSTP-0006-00(869)

NO SCALE OCTOBER 2008

SUPERVISED BY	DESIGNED BY ENC	DRAWN BY DAW	QUANTITIES BY
HISHAM H DEEB, PE	CHECKED BY QSW	CHECKED BY ENC	CHECKED BY
DESIGN GROUP WEI			
APPROVED PVL			
BRIDGE SHEET 11 OF 16			

DATE | REVISIONS | BY

BEARING.DGN

STATE	PROJECT NUMBER	SHEET NO.	TOTAL SHEETS
GA.	CSSTP-0006-00(869)		

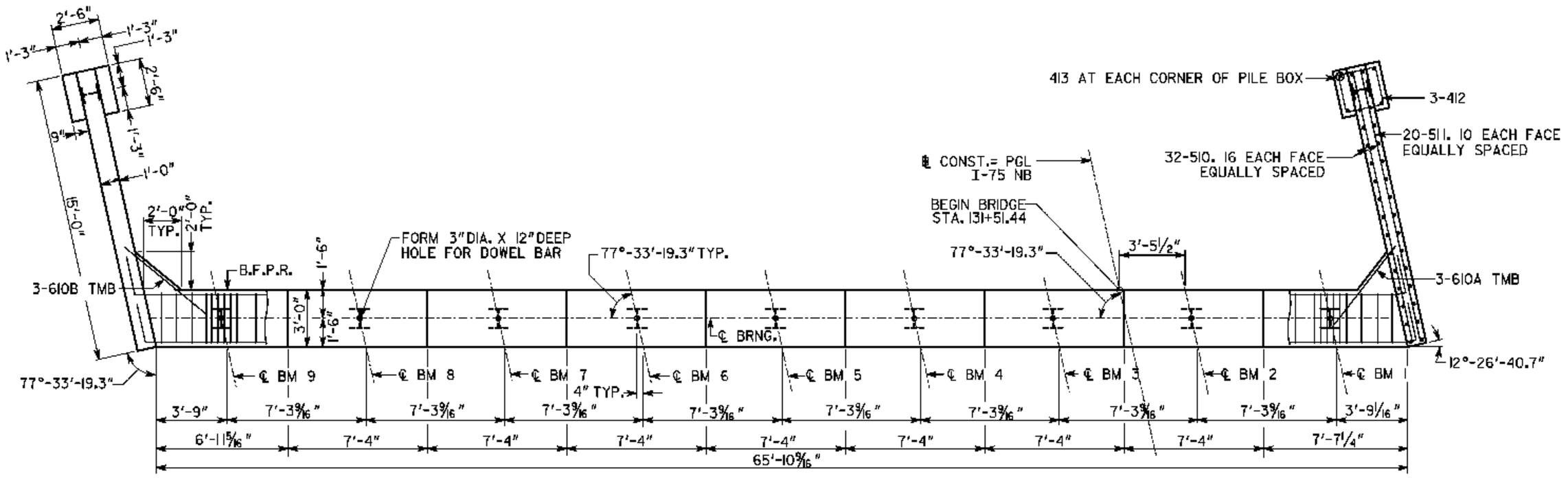

PLAN

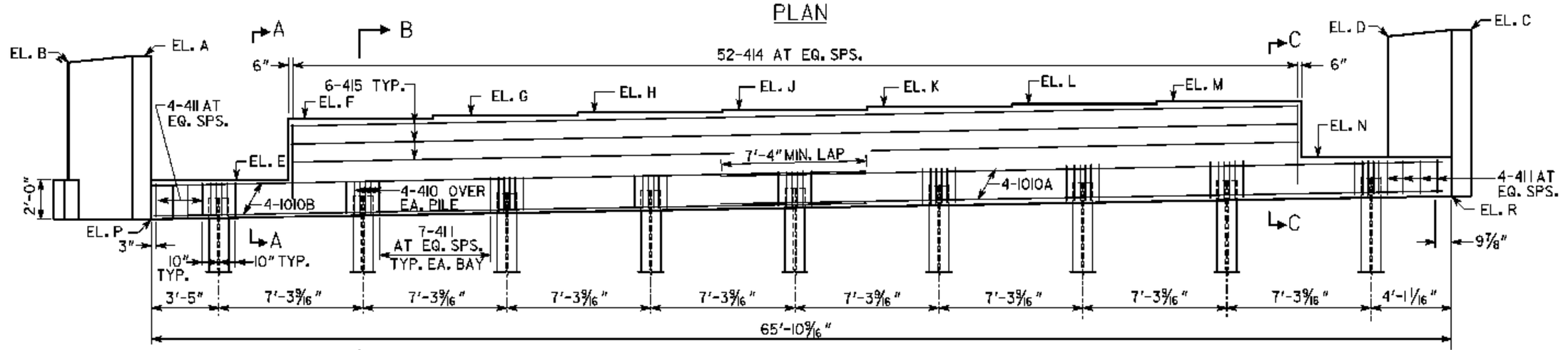

ELEVATION

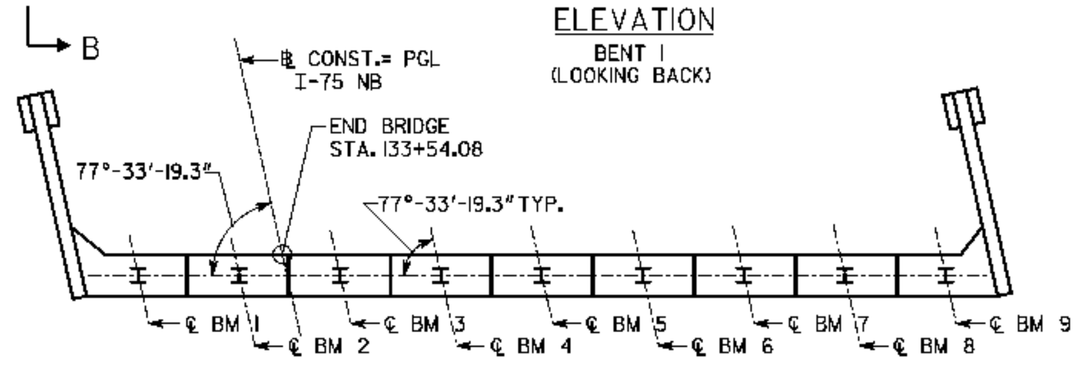

PLAN

BENT 1
(LOOKING BACK)

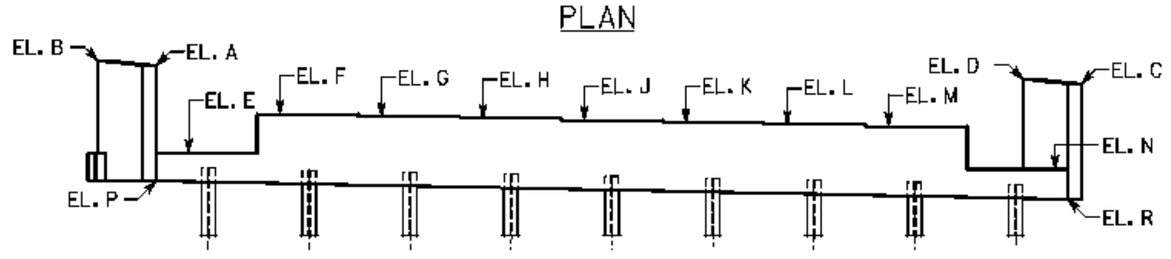

ELEVATION

BENT 4
(LOOKING AHEAD)

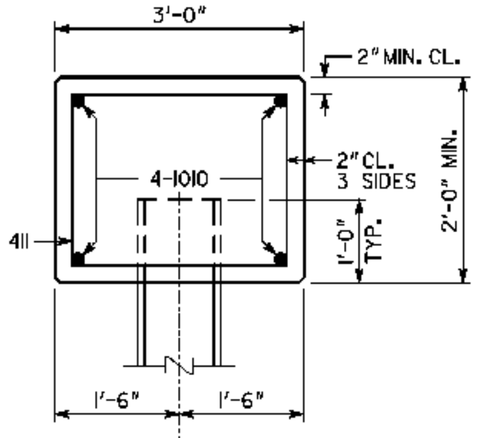

SECTION A-A

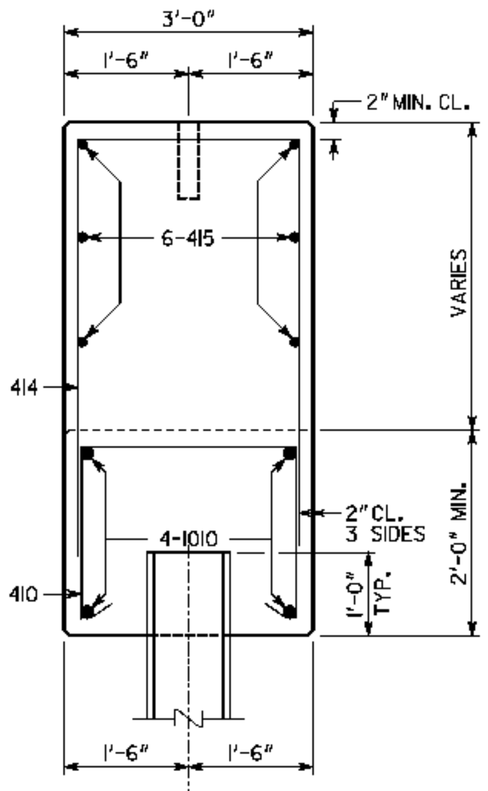

SECTION B-B

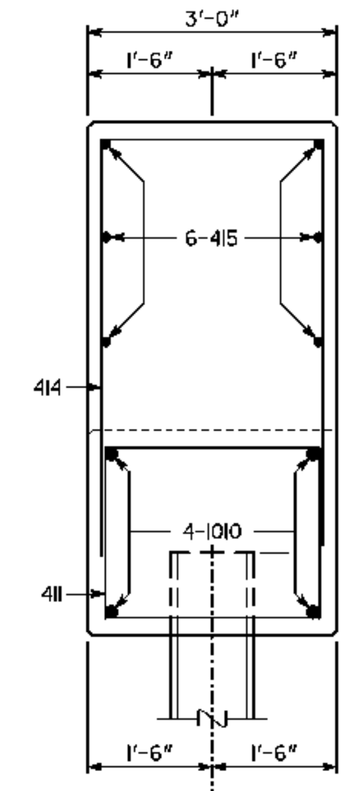

SECTION C-C

NOTES:

- MAINTAIN 2" CL. ON ALL REINFORCEMENT UNLESS OTHERWISE NOTED.
- ALL PILES SHALL BE STEEL H, HP 12 X 53.
- POUR WINGWALLS MONOLITHICALLY WITH CAP.
- WINGWALL PILES NOT SHOWN IN ELEVATION VIEW.
- SEE GA. STD 9037 FOR DRAINAGE DETAILS AT END BENTS.

PLAN DRIVING OBJECTIVE

ALL PILES SHALL BE DRIVEN TO A DRIVING RESISTANCE OF 60 TONS AFTER A MINIMUM TIP ELEVATIONS OF 944 AT BENT 1 AND 932 AT BENT 4 ARE ACHIEVED.

SUBSTRUCTURE QUANTITIES		
ITEM	BENT 1	BENT 4
CY CLASS "AA" CONCRETE	43.6	43.6
LB BAR REINFORCEMENT STEEL	3815	3831

TABLE OF ELEVATIONS															
	A	B	C	D	E	F	G	H	J	K	L	M	N	P	R
BENT 1	983.32	982.98	984.93	984.59	976.20	979.37	979.55	979.73	979.91	980.08	980.26	980.44	977.63	974.03	975.63
BENT 4	989.36	989.70	987.75	988.09	982.17	984.95	984.77	984.59	984.42	984.24	984.06	983.88	980.75	980.17	978.56

BRIDGE NO. 2

Marc and Alghali Associates, Inc.
2211 Beaver Ruin Road Suite 190
Norcross, Georgia 30071
Tel.: (770) 263-9345

GEORGIA
DEPARTMENT OF TRANSPORTATION
PRECONSTRUCTION DIVISION-OFFICE OF BRIDGE DESIGN

END BENT DETAILS

I-75 NB OVER BIG SHANTY CONNECTOR

COBB COUNTY CSSTP-0006-00(869)

NO SCALE OCTOBER 2008

SUPERVISED BY	DESIGNED BY ENC	DRAWN BY DAW	QUANTITIES BY ENC
HISHAM H DEEB, PE	CHECKED BY QSJ	CHECKED BY ENC	CHECKED BY JTW
DESIGN GROUP WEI			
APPROVED PVL			
BRIDGE SHEET 12 OF 16			

BY	REVISIONS	DATE

X.DGN

STATE	PROJECT NUMBER	SHEET NO.	TOTAL SHEETS
GA.	CSSTP-0006-00(869)		

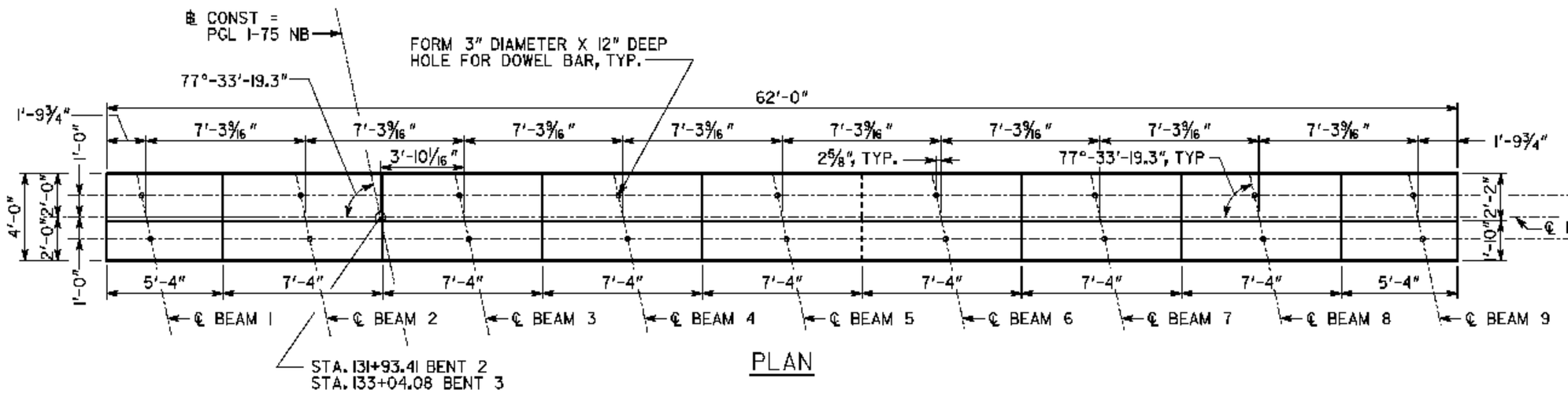

PLAN

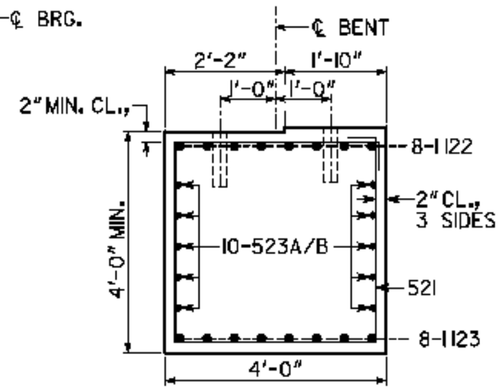

SECTION A-A

BENT 2 SHOWN
(BENT 3 OPPOSITE)

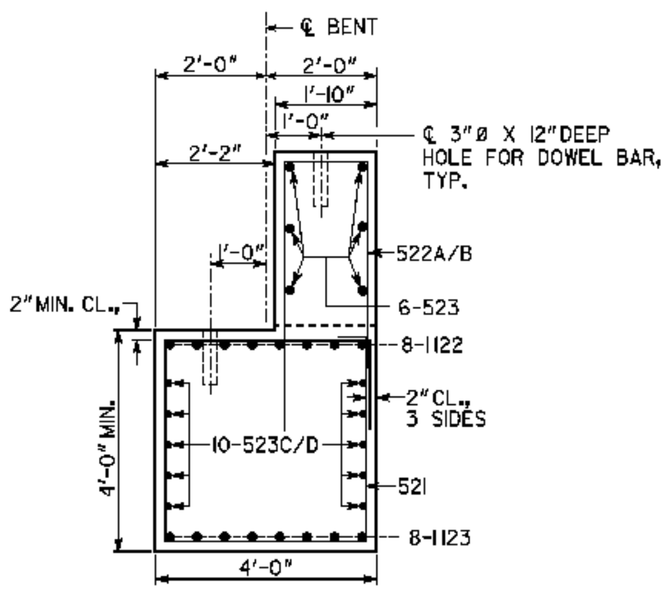

SECTION B-B

BENT 2 SHOWN
(BENT 3 OPPOSITE)

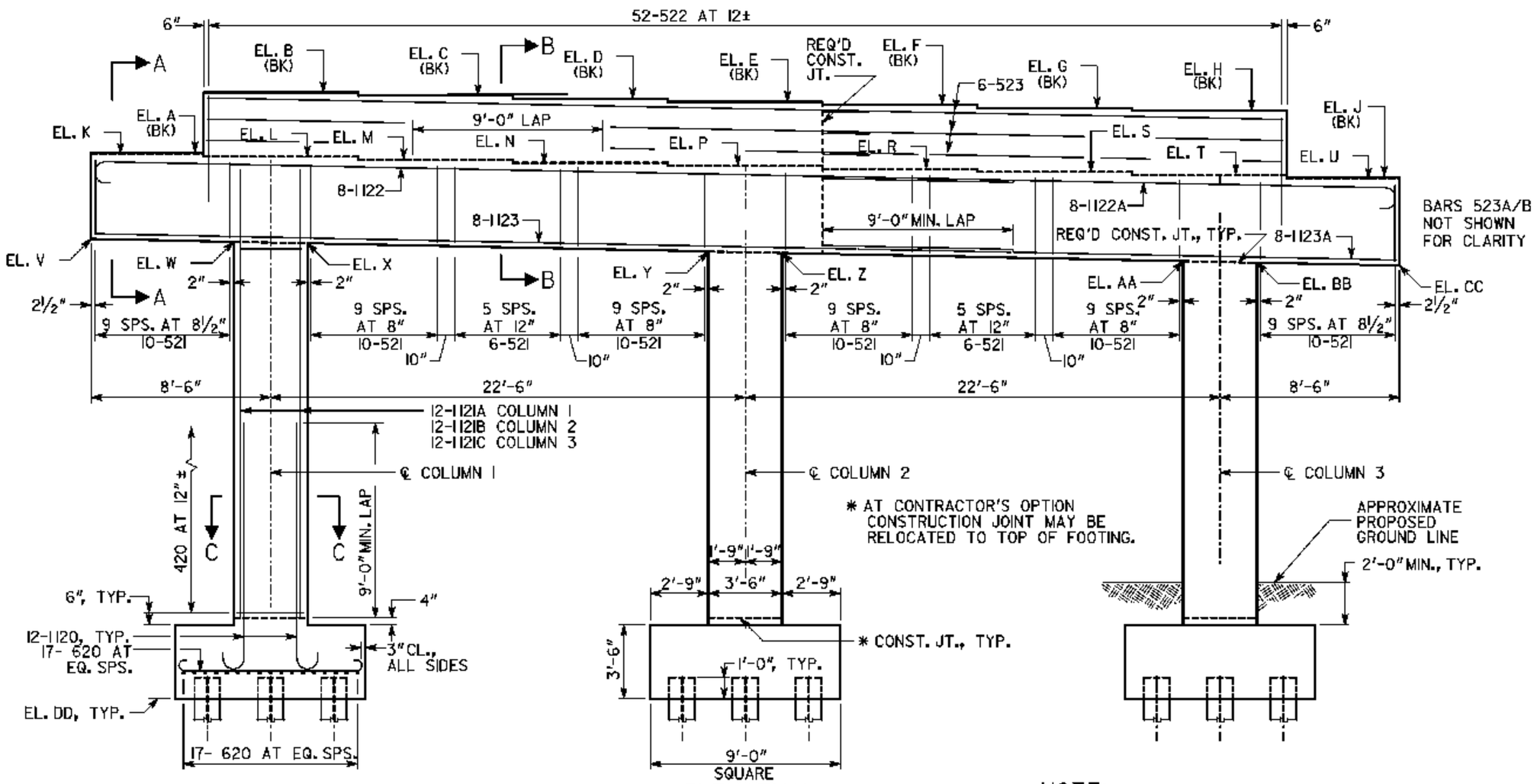

ELEVATION

(LOOKING AHEAD)

BENT 2 SHOWN

BENT 3 SIMILAR

NOTE:

MAINTAIN 2" CL. ON ALL REINFORCEMENT UNLESS OTHERWISE NOTED

ALL PILES SHALL BE STEEL H, HP 14 X 73

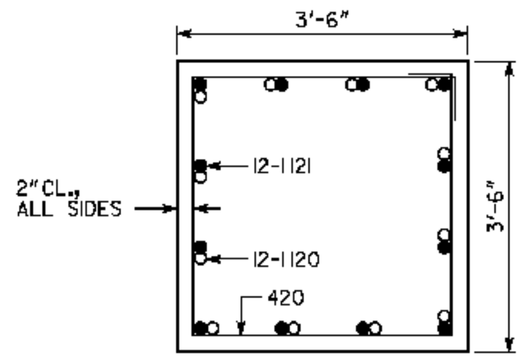

SECTION C-C

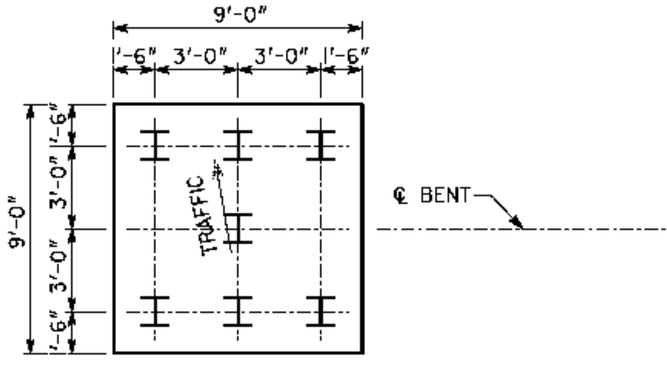

PILE LAYOUT

PLAN DRIVING OBJECTIVE

ALL PILES SHALL BE DRIVEN TO A DRIVING RESISTANCE OF 96 TONS AFTER A MINIMUM TIP ELEVATIONS OF 940 AT BENT 2 AND 933 AT BENT 3 ARE ACHIEVED.

SUBSTRUCTURE QUANTITIES		
ITEM	BENT 2	BENT 3
CY CLASS "AA" CONCRETE	103.7	107.3
LB BAR REINF STEEL	17071	17486

BRIDGE NO. 2

TABLE OF ELEVATIONS

	A	B	C	D	E	F	G	H	J	K	L	M	N	P	R	S	T	U
BENT 2	BACK									AHEAD								
	978.56	981.31	981.19	981.01	980.84	980.66	980.48	980.30	977.13	978.46	978.30	978.12	977.95	977.77	977.59	977.41	977.23	977.04
BENT 3	AHEAD									BACK								
	981.10	983.88	983.70	983.52	983.35	983.17	982.99	982.81	979.68	980.91	980.76	980.57	980.40	980.22	980.04	979.86	979.68	979.48

TABLE OF ELEVATIONS

	V	W	X	Y	Z	AA	BB	CC	DD
BENT 2	974.46	974.29	974.20	973.73	973.64	973.16	973.08	972.91	953.00
BENT 3	976.91	976.74	976.65	976.17	976.00	975.60	975.52	975.35	953.00

Moore and Alphabet Associates, Inc.
2211 Beaver Ruin Road Suite 190
Norcross, Georgia 30071
Tel.: (770) 263-5945

GEORGIA

DEPARTMENT OF TRANSPORTATION

PRECONSTRUCTION DIVISION-OFFICE OF BRIDGE DESIGN

INTERMEDIATE BENTS 2 & 3

I-75 NB OVER BIG SHANTY CONNECTOR

COBB COUNTY CSSTP-0006-00(869)

NO SCALE OCTOBER 2008

SUPERVISED BY	DESIGNED BY ENC	DRAWN BY DAW	QUANTITIES BY ENC
HISHAM H DEEB, PE	CHECKED BY QSJ	CHECKED BY ENC	CHECKED BY JTW
DESIGN GROUP WEI			
APPROVED PVL			
BRIDGE SHEET 13 OF 16			

REVISIONS | BY | DATE

X.DGN

STATE	PROJECT NUMBER	SHEET NO.	TOTAL SHEETS
GA.	CSSTP-0006-00(869)		

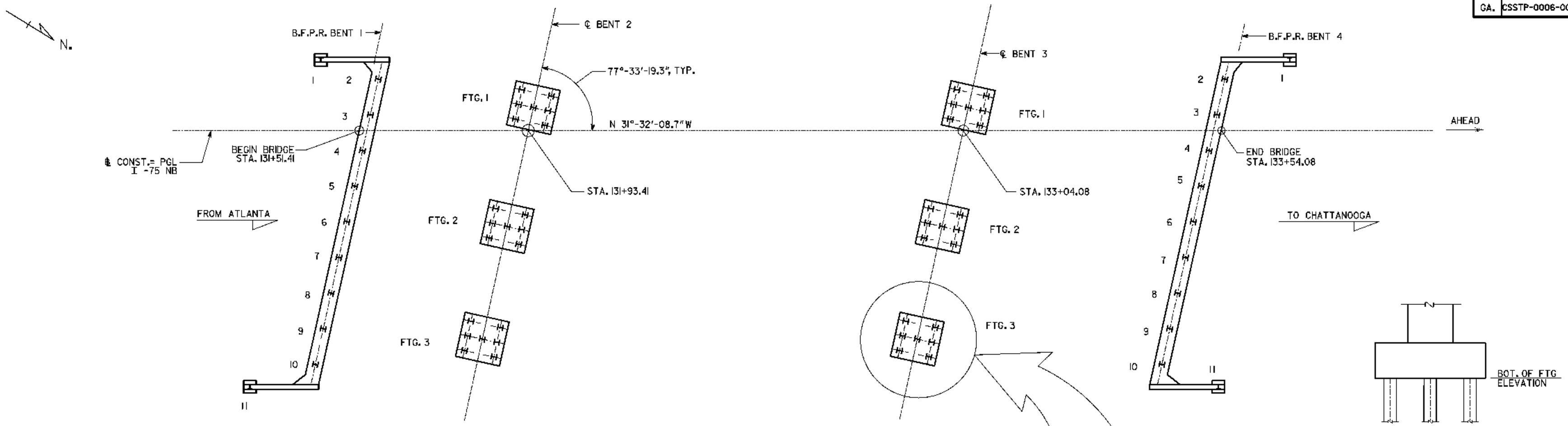

AS-BUILT FOUNDATION INFORMATION			
BENT	PILE LOCATION	PILE NO.	PILE TIP ELEVATION
1	LEFT WINGWALL	1	
	BEAM 1	2	
	BEAM 2	3	
	BEAM 3	4	
	BEAM 4	5	
	BEAM 5	6	
	BEAM 6	7	
	BEAM 7	8	
	BEAM 8	9	
	BEAM 9	10	
	RIGHT WINGWALL	11	

AS-BUILT FOUNDATION INFORMATION			
BENT	PILE LOCATION	PILE NO.	PILE TIP ELEVATION
4	LEFT WINGWALL	1	
	BEAM 1	2	
	BEAM 2	3	
	BEAM 3	4	
	BEAM 4	5	
	BEAM 5	6	
	BEAM 6	7	
	BEAM 7	8	
	BEAM 8	9	
	BEAM 9	10	
	RIGHT WINGWALL	11	

AS-BUILT FOUNDATION INFORMATION				
BENT	FTG. LOCATION	BOTTOM OF FTG. ELEV.	PILE NO.	PILE TIP ELEVATION
2	FTG. 1		1	
			2	
			3	
			4	
			5	
			6	
			7	
	FTG. 2		1	
			2	
			3	
			4	
			5	
			6	
			7	
	FTG. 3		1	
			2	
			3	
			4	
			5	
			6	
			7	

AS-BUILT FOUNDATION INFORMATION				
BENT	FTG. LOCATION	BOTTOM OF FTG. ELEV.	PILE NO.	PILE TIP ELEVATION
3	FTG. 1		1	
			2	
			3	
			4	
			5	
			6	
			7	
	FTG. 2		1	
			2	
			3	
			4	
			5	
			6	
			7	
	FTG. 3		1	
			2	
			3	
			4	
			5	
			6	
			7	

NOTE:

THIS AS-BUILT INFORMATION SHEET IS TO BE FILLED IN BY THE DESIGN PROJECT ENGINEER AND FORWARDED TO THE BRIDGE OFFICE AFTER INSTALLATION OF ALL PILES AND FOOTINGS FOR POSTING TO THE PLANS AS A PERMANENT RECORD OF THE BRIDGE CONSTRUCTION.

PROJECT ENGINEER _____ DATE _____

( ) _____

(AREA CODE) TELEPHONE NUMBER

BRIDGE NO. 2

Moreland Altobelli Associates, Inc.
221 Beaver Ruin Road Suite 190
Norcross, Georgia 30071
Tel: (770) 263-5945

GEORGIA
DEPARTMENT OF TRANSPORTATION
PRECONSTRUCTION DIVISION-OFFICE OF BRIDGE DESIGN

AS-BUILT FOUNDATION INFORMATION
I-75 NB OVER BIG SHANTY CONNECTOR
COBB COUNTY CSSTP-0006-00(869)

NO SCALE OCTOBER 2008

SUPERVISED BY	DESIGNED BY	ENC	DRAWN BY	DAW	QUANTITIES BY	
HISHAM H DEEB, PE	CHECKED BY	QSJ	CHECKED BY	ENC	CHECKED BY	
DESIGN GROUP WE1						
APPROVED PVL						
BRIDGE SHEET 14 OF 16						

REVISIONS | BY | DATE

X.DGN

LOCATION	NO. OF LOC.	MARK	LENGTH FT.-IN.	NO. BARS REQ'D.	TYPE	A	G	B FT.-IN.	C FT.-IN.	D FT.-IN.	E FT.-IN.	F FT.-IN.	H FT.-IN.	J FT.-IN.	K FT.-IN.	N	θ
SPAN 1	1																
		400A	41- 8	88	1												
		401A	18- 5	3	1												
		401B	19- 4	9	1												
		404A	33- 7	6	1												
		404B	7- 0	8	1												
		405	5- 2	48	31	4	4	0- 9	1-10	1-10							
		405A	VARY	6	31	4	4	0- 9	3- 6	3- 6							
		405B	8-11	2	25	4	4	3- 4	0- 9								
		407A	6- 1	16	1												
		408	4-11	56	25	4	4	1- 6	0- 7								
		433A	13- 0	2	7			1- 0	6- 0	6- 0						45	45
		434	5-11	2	3			5- 3	0- 8								
		435	5- 0	2	1												
		490A	41- 8	45	1												
		491A	18- 5	3	1												
		491B	19- 4	9	1												
		492	5- 2	77	3			4- 6	0- 8								
		501	32- 7	154	1												
		504A	6- 7	6	46			4- 2	1- 2	0- 4	0- 8	0- 8					
		504B	7- 3	12	46			4- 2	1-10	0- 4	0- 8	0- 8					
		504C	5- 2	36	46			2- 1	1-10	0- 4	0- 8	0- 8					
		505	33-10	2	1												
		506	7- 0	21	3			5- 9	1- 3								
		506A	3- 4	44	6			1- 4	1- 0	0- 0	1- 0					45	45
		506B	4- 1	69	3			2-10	1- 3								
		507	58- 6	1	1												
		507A	2- 6	2	1												
		508A	5- 9	8	1												
		508B	1- 9	2	1												
		509	5- 3	32	1												
		590	33- 5	154	9	3		32- 7									
		592	6- 6	146	23			0- 8	2-11	2-11							96
		593	4-11	146	23			0- 5	2- 3	2- 3							84
		800A	36- 1	2	6			33- 7	1- 1 1/2	1- 4							12
		800B	35- 7	2	5			34- 3	1- 4								78
		801	58- 6	1	1												
		802A	6- 3	8	1												
		900A	39- 6	6	44			1- 2	1-10 1/2	3- 1	3-10	1- 0	35- 2	0- 0	0- 0	5	45
		900B	7- 0	8	16	6	6	2- 8	1- 2	1- 2	1- 0	0- 0					
SPAN 2	1																
		400B	60- 0	80	1												
		400C	52- 4	80	1												
		401C	22- 0	12	1												
		401D	21- 8	18	1												
		405B	8-11	32	25	4	4	3- 4	0- 9								
		405C	11- 4	80	31	4	4	0- 9	4-11	4-11							
		407B	6- 5	48	1												
		408A	10- 7	40	25	4	4	4- 4	0- 7								
		408B	6-11	16	25	4	4	2- 6	0- 7								
		434	5-11	4	3			5- 3	0- 8								
		435	5- 0	4	1												
		490B	60- 0	45	1												
		490C	52- 4	45	1												
		491C	22- 0	12	1												
		491D	21- 8	18	1												
		492	5- 2	191	3			4- 6	0- 8								
		501	32- 7	382	1												
		507	58- 6	6	1												
		508C	6- 5	48	1												
		509A	3- 3	16	1												

LOCATION	NO. OF LOC.	MARK	LENGTH FT.-IN.	NO. BARS REQ'D.	TYPE	A	G	B FT.-IN.	C FT.-IN.	D FT.-IN.	E FT.-IN.	F FT.-IN.	H FT.-IN.	J FT.-IN.	K FT.-IN.	N	θ
		509B	4- 7	16	1												
		590	33- 5	382	9	3		32- 7									
		592	6- 6	330	23			0- 8	2-11	2-11							96
		593	4-11	330	23			0- 5	2- 3	2- 3							84
		690	10- 0	176	1												
		800A	36- 1	4	6			33- 7	1- 1 1/2	1- 4							12
		800B	35- 7	4	5			34- 3	1- 4								78
		801	58- 6	2	1												
		802B	6- 5	16	1												
SPAN 3	1																
		400D	49- 8	88	1												
		401E	22-10	6	1												
		401F	23-10	3	1												
		401G	22-11	3	1												
		404A	33- 7	6	1												
		404B	7- 0	8	1												
		405	5- 2	48	31	4	4	0- 9	1-10	1-10							
		405A	VARY	6	31	4	4	0- 9	3- 6	3- 6							
		405B	8-11	2	25	4	4	3- 4	0- 9								
		407A	6- 1	16	1												
		408	4-11	56	25	4	4	1- 6	0- 7								
		433A	13- 0	2	7			1- 0	6- 0	6- 0						45	45
		434	5-11	2	3			5- 3	0- 8								
		435	5- 0	2	1												
		490D	49- 8	45	1												
		491E	22-10	6	1												
		491F	23-10	3	1												
		491G	22-11	3	1												
		492	5- 2	91	3			4- 6	0- 8								
		501	32- 7	182	1												
		504A	6- 7	6	46			4- 2	1- 2	0- 4	0- 8	0- 8					
		504B	7- 3	12	46			4- 2	1-10	0- 4	0- 8	0- 8					
		504C	5- 2	36	46			2- 1	1-10	0- 4	0- 8	0- 8					
		505	33-10	2	1												
		506	7- 0	21	3			5- 9	1- 3								
		506A	3- 4	44	6			1- 4	1- 0	0- 0	1- 0					45	45
		506B	4- 1	69	3			2-10	1- 3								
		507	58- 6	1	1												
		507A	2- 6	2	1												
		508A	5- 9	8	1												
		508B	1- 9	2	1												
		509	5- 3	32	1												
		590	33- 5	182	9	3		32- 7									
		592	6- 6	174	23			0- 8	2-11	2-11							96
		593	4-11	174	23			0- 5	2- 3	2- 3							84

LOCATION	NO. OF LOC.	MARK	LENGTH FT.-IN.	NO. BARS REQ'D.	TYPE	A	G	B FT.-IN.	C FT.-IN.	D FT.-IN.	E FT.-IN.	F FT.-IN.	H FT.-IN.	J FT.-IN.	K FT.-IN.	N	θ
		800A	36- 1	2	6			33- 7	1- 1 1/2	1- 4							12
		800B	35- 7	2	5			34- 3	1- 4								78
		801	58- 6	1	1												
		802A	6- 3	8	1												
		900A	39- 6	6	44			1- 2	1-10 1/2	3- 1	3-10	1- 0	35- 2	0- 0	0- 0	5	45
		900B	7- 0	8	16	6	6	2- 8	1- 2	1- 2	1- 0	0- 0					

STATE: GA. PROJECT NUMBER: CSSTP-0006-00(869) SHEET NO. TOTAL SHEETS

BRIDGE NO. 2

Moreland Altobelli Associates, Inc.
2211 Beaver Ruin Road Suite 190
Norcross, Georgia 30071
Tel.: (770) 263-5945

GEORGIA
DEPARTMENT OF TRANSPORTATION
PRECONSTRUCTION DIVISION-OFFICE OF BRIDGE DESIGN

BAR REINFORCEMENT DETAILS (I)

I-75 NB OVER BIG SHANTY CONNECTOR

COBB COUNTY CSSTP-0006-00(869)

NO SCALE OCTOBER 2008

SUPERVISED BY HISHAM H DEEB, PE
DESIGN GROUP WEI
APPROVED PVL
BRIDGE SHEET 15 OF 16

BY | REVISIONS | DATE

DESIGNED BY ENC CHECKED BY QSJ | DRAWN BY DAW CHECKED BY QSJ | QUANTITIES BY JTW CHECKED BY EJC

X.DGN

LOCATION	NO. OF LOC.	MARK	LENGTH FT.	LENGTH IN.	NO. BARS REQ'D.	TYPE	A	G	B FT.	B IN.	C FT.	C IN.	D FT.	D IN.	E FT.	E IN.	F FT.	F IN.	H FT.	H IN.	J FT.	J IN.	K FT.	K IN.	N	θ
BENT 1	1																									
		410	6- 9	36	32	5	5	2- 8		1- 8		1- 8														
		411	9- 5	64	25	4	4	2- 8		1- 8																
		412	9- 5	6	25	4	4	2- 2		2- 2																
		413	1- 8	8	1																					
		414	10- 8	53	2			2- 8		4- 0		4- 0														
		415	50-10	6	1																					
		510	8- 9	64	1																					
		511	14- 8	40	1																					
		610A	5- 2	3	1																					
		610B	5- 8	3	1																					
		1010A	40- 0	4	6			37- 6		0- 6		2- 0													12	
		1010B	40- 0	4	4			38- 0		2- 0															78	
BENT 2	1																									
		420	13- 5	57	25	4	4	3- 2		3- 2																
		521	15- 8	72	25	4	4	3- 8		3- 8																
		522	11- 6	53	2			1- 6		5- 0		5- 0														
		523A	31- 0	6	1																					
		523B	21- 6	6	1																					
		523C	36- 4	10	1																					
		523D	26-10	10	1																					
		620	9-10	102	10	1	1	8- 6																		
		1120	13- 8	36	9	1		12- 1																		
		1121A	21- 6	12	1																					
		1121B	21- 0	12	1																					
		1121C	20- 6	12	1																					
		1122	45- 1	8	9	1		43- 6																		
		1122A	28- 8	8	9	1		21-7																		
		1123	43- 6	8	1																					
		1123A	27- 1	8	1																					
BENT 3	1																									
		430	13- 5	63	25	4	4	3- 2		3- 2																
		531	15- 8	72	25	4	4	3- 8		3- 8																
		532	11- 6	53	2			1- 6		5- 0		5- 0														
		533A	31- 0	6	1																					
		533B	21- 6	6	1																					
		533C	36- 4	10	1																					
		533D	26-10	10	1																					
		630	9-10	102	10	1	1	8- 6																		
		1130	13- 8	36	9	1		12- 1																		
		1131A	23- 8	12	1																					
		1131B	23- 2	12	1																					
		1131C	22- 8	12	1																					
		1132	45- 1	8	9	1		43- 6																		
		1132A	28- 8	8	9	1		21-7																		
		1133	43- 6	8	1																					
		1133A	27- 1	8	1																					
BENT 4	1																									
		440	6- 9	36	32	5	5	2- 8		1- 8		1- 8														
		441	9- 5	64	25	4	4	2- 8		1- 8																
		442	9- 5	6	25	4	4	2- 2		2- 2																
		443	1- 8	8	1																					
		444	10- 8	53	2			2- 8		4- 0		4- 0														
		445	50-10	6	1																					

LOCATION	NO. OF LOC.	MARK	LENGTH FT.	LENGTH IN.	NO. BARS REQ'D.	TYPE	A	G	B FT.	B IN.	C FT.	C IN.	D FT.	D IN.	E FT.	E IN.	F FT.	F IN.	H FT.	H IN.	J FT.	J IN.	K FT.	K IN.	N	θ
		540	9- 0	64	1																					
		541	14- 8	40	1																					
		640A	5- 8	3	1																					
		640B	5- 2	3	1																					
		1040A	40- 0	4	6			37- 6		0- 6		2- 0														12
		1040B	40- 0	4	4			38- 0		2- 0																78

STATE	PROJECT NUMBER	SHEET NO.	TOTAL SHEETS
GA.	CSSTP-0006-00(869)		

BRIDGE NO. 2

Marcard Allabaugh Associates, Inc.
221 Beaver Ruin Road Suite 190
Norcross, Georgia 30071
Tele (770) 263-5945

GEORGIA
DEPARTMENT OF TRANSPORTATION
PRECONSTRUCTION DIVISION-OFFICE OF BRIDGE DESIGN

BAR REINFORCEMENT DETAILS (2)
I-75 NB OVER BIG SHANTY CONNECTOR
COBB COUNTY CSSTP-0006-00(869)

NO SCALE OCTOBER 2008

SUPERVISED BY	DESIGNED BY	DRAWN BY	QUANTITIES BY
HISHAM H DEEB, PE	ENC	DAW	ENC
DESIGN GROUP	CHECKED BY	CHECKED BY	CHECKED BY
WEI	QSJ	ENC	JTW
APPROVED			
PVL			
BRIDGE SHEET			
16 OF 16			

DATE
REVISIONS
BY

X.DGN

CALCULATION SHEET

PROJECT: I-75 / I-575 NORTHWEST CORRIDOR
JOB NUMBER NH000-0073-03(242)
CALC NO. BR#32

SUBJECT: Bridge Foundation Investigation
BY: JCR DATE: 11/30/2009

SHEET NO.
SHEET REV.

BRIDGE FOUNDATION INVESTIGATION REPORT
I-75 Reversible Lanes over Big Shanty Connector
Northwest Corridor Project
GDOT Project No. NH000-0073-03(242), PI No. 714130
Cobb County, Georgia

WILLMER ENGINEERING INC.
Project No. ATL-171-3463BF13

Document No.: ATL-171-3463BF13-32
Revision: A
Issue Date: October 19, 2009
Document Status: Issued For Review

Prepared For

GEORGIA TRANSPORTATION PARTNERS
Atlanta, Georgia

Prepared By

WILLMER ENGINEERING INC.
3772 Pleasantdale Road
Suite 185
Atlanta, Georgia 30340-4270

770.939.0089

October 19, 2009

VIA US MAIL

Pete M. McMahon, PE
Georgia Transportation Partners
c/o PBS&J, Inc.
1600 RiverEdge Pkwy
Suite 600
Atlanta, Georgia 30328

SUBJECT: **Bridge Foundation Investigation Report**
I-75 Reversible Lanes over Big Shanty Connector
Northwest Corridor Project
GDOT Project No. NH000-0073-03(242), PI No. 714130
Cobb County, Georgia
Willmer Project No. ATL-171 3463BFI3

Dear Mr. McMahon:

Willmer Engineering Inc. (Willmer) is pleased to provide this Bridge Foundation Investigation (BFI) report for the proposed I-75 Reversible Lanes bridge over Big Shanty Connector in Cobb County, Georgia. The BFI was performed in general accordance with our contracts with Georgia Transportation Partners (GTP), dated July 10, 2009 and August 7, 2009 and in general accordance with Georgia Department of Transportation (GDOT) guidance documents for bridge foundation investigation.

The attached summary presents the site and subsurface conditions along the proposed bridge alignment and our geotechnical recommendations related to bridge foundation design and construction.

We appreciate the opportunity to be of service to you on this project and look forward to a continuing relationship. Please contact us if you have any questions concerning this report or require further assistance.

Sincerely,
WILLMER ENGINEERING INC.

Murthy S. Kotha
Project Engineer

Sujit K. Bhowmik, PhD, PE
Chief Engineer

James L. Willmer, PE
Executive Vice President/Principal Consultant

MSK/SKB/JLW:mp

Attachments: **Bridge Foundation Investigation**

Figures

Figure 1 Project Location Map
Figure 2 Boring Location Plan
Figure 3 Generalized Subsurface Profile A-A'

Appendix I

Boring Record Legend
Unified Soil Classification System Reference Sheet
Engineering Description of Rock Hardness
Boring Records: B-291 through B-294

Revision History

Revision	Issue Date	Document Status
A	October 19, 2009	Issued for Review

BRIDGE FOUNDATION INVESTIGATION

Willmer Project Number	ATL-171-3463BFI3
GDOT Project Number	NH000-0073-23(242)
Project P.I. Number	714130
Location	I-75 Reversible Lanes Bridge over Big Shanty Connector, Cobb County, Georgia (see Figure 1)

GENERAL INFORMATION

Project Description	A new three-span bridge is planned for the proposed I-75 Reversible Lanes over the proposed Big Shanty Connector. The bridge will be a 202.7 feet long by 25.4 feet wide reinforced concrete structure. The design lengths for the three spans from south to north are 42, 110.7 and 50 feet respectively.
Geologic Information	The bridge alignment is geologically sited within the Piedmont Physiographic Province of Georgia, and is underlain by Metamorphosed Maffic Rock Formations which include amphibolite, mica schist, and biotite gneiss.
Subsurface Features	The subsurface profile is generally comprised of fill and residuum underlain by partially weathered rock (PWR) and parent bedrock. The fill material consists of loose silty sand. The residual soils consist primarily of loose silty sand, becoming medium dense to very dense above the PWR. Rock, indicated as auger refusal, was encountered within the boring depth at B-293. Groundwater was encountered at all boring locations between elevations 957 and 967 feet.

PWR AND AUGER REFUSAL ELEVATIONS (feet)

Bent No.	Reference Boring No.	Top of PWR	Auger Refusal
1	B-291	934	**
2	B-292	924	**
3	B-293	921	914
4	B-294	919	**

** Boring was not extended to auger refusal.

MAXIMUM PILE DESIGN LOADS

Pile Type	Load Transfer (%)		Design Load
	Friction	End Bearing	
H-Piles	10-30	70-90	HP 10x42 = 55 Tons HP 12x53 = 70 Tons HP 14x73 = 96 Tons HP 14x89 = 117 Tons

FOUNDATION RECOMMENDATIONS

Bent No.	Pile Footing (Type)	Pile Bent (Type)
1		H
2	H	
3	H	
4		H

PILE TIP ELEVATIONS (ft)

Bent No.	Reference Boring No.	H-Pile	
		Minimum Tip	Estimated Tip
1	B-291	933±	931±
2	B-292	923±	921±
3	B-293	920±	918±
4	B-294	912±	910±

NOTES

Elevations	All elevations referenced in this report were surveyed and provided to us by Long Engineering, Inc.
PDO	Driving resistance after Minimum Tip Elevations are achieved.
Waiting Period	None required.
Pile Footing	Due to high groundwater elevation near the bottom of footing, we recommend that 12 inches of Type II Foundation Backfill material be set up for use at Bents 2 and 3. The use of this material should be at the discretion of the Engineer and may be eliminated if the footing area is dry during construction. Dewatering of the excavation may also be required depending on the groundwater elevation during construction.
Special Problems	None.
As-built Information	As-built information should be forwarded to the Geotechnical Engineering Bureau upon completion of the foundation system.
Prepared By	Murthy S. Kotha / Sujit K. Bhowmik, PhD, PE
Senior Review By	James L. Willmer, PE

FIGURES

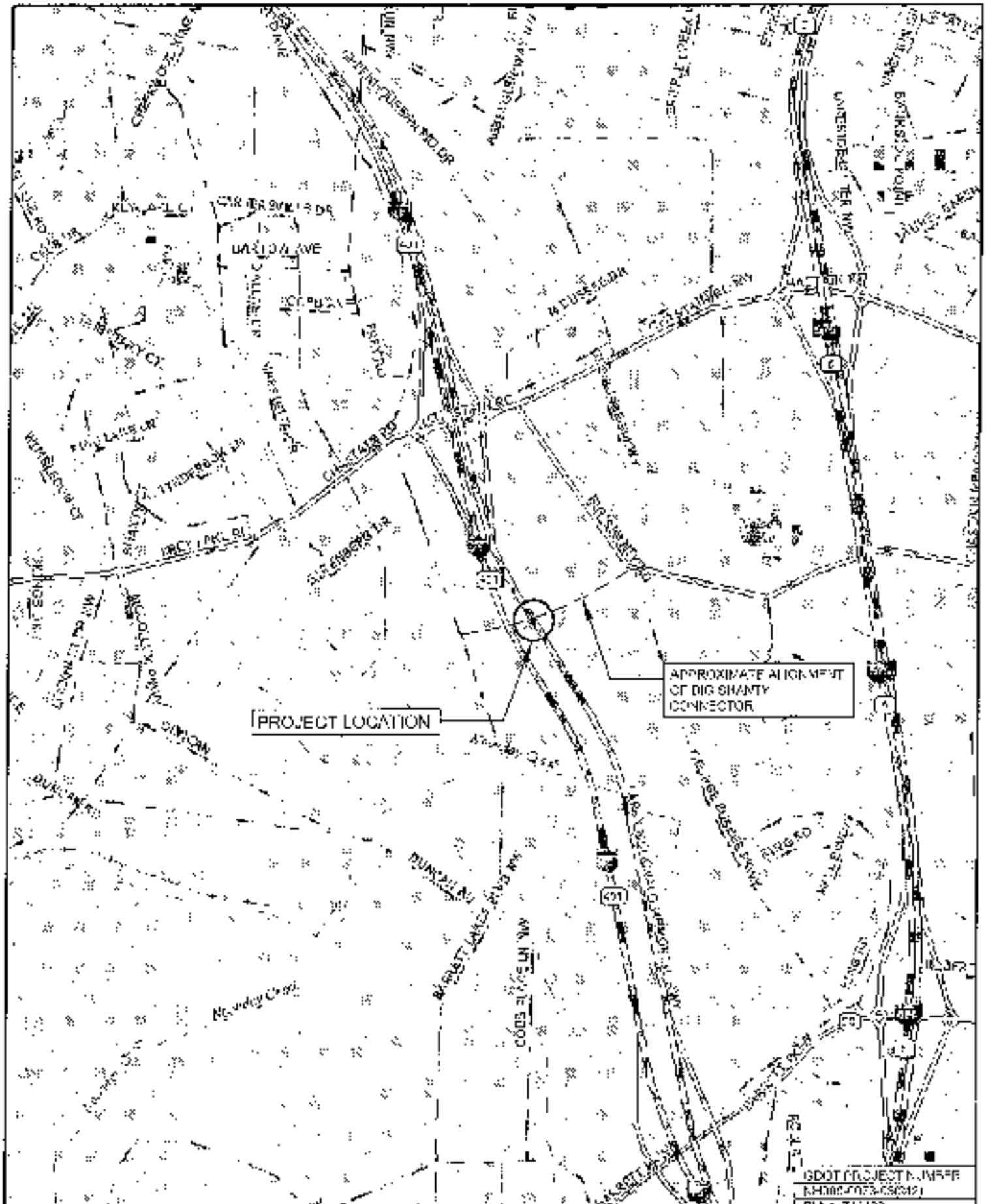

SCALE: 1" = 1500'

DATE: 10/19/2000

DRAWN BY: MLW

REVIEWED BY: MK

LICENSED PROFESSIONAL ENGINEER NO.
LANE DIRECTION SERVICES
ENVIRONMENTAL SURVEYS AND CONSULTING
5721 PEACHTREE ROAD, SUITE 100
ATLANTA, GA 30342-4200

FIGURE 1: PROJECT LOCATION MAP
BRIDGE 32: I-75 REVERSIBLE LANES OVER BIG
SHANTY CONNECTOR
NCR - WEST CORRIDOR PROJECT
COBB COUNTY, GEORGIA
WILLMER PROJECT NO. ATL-171-34933F.3

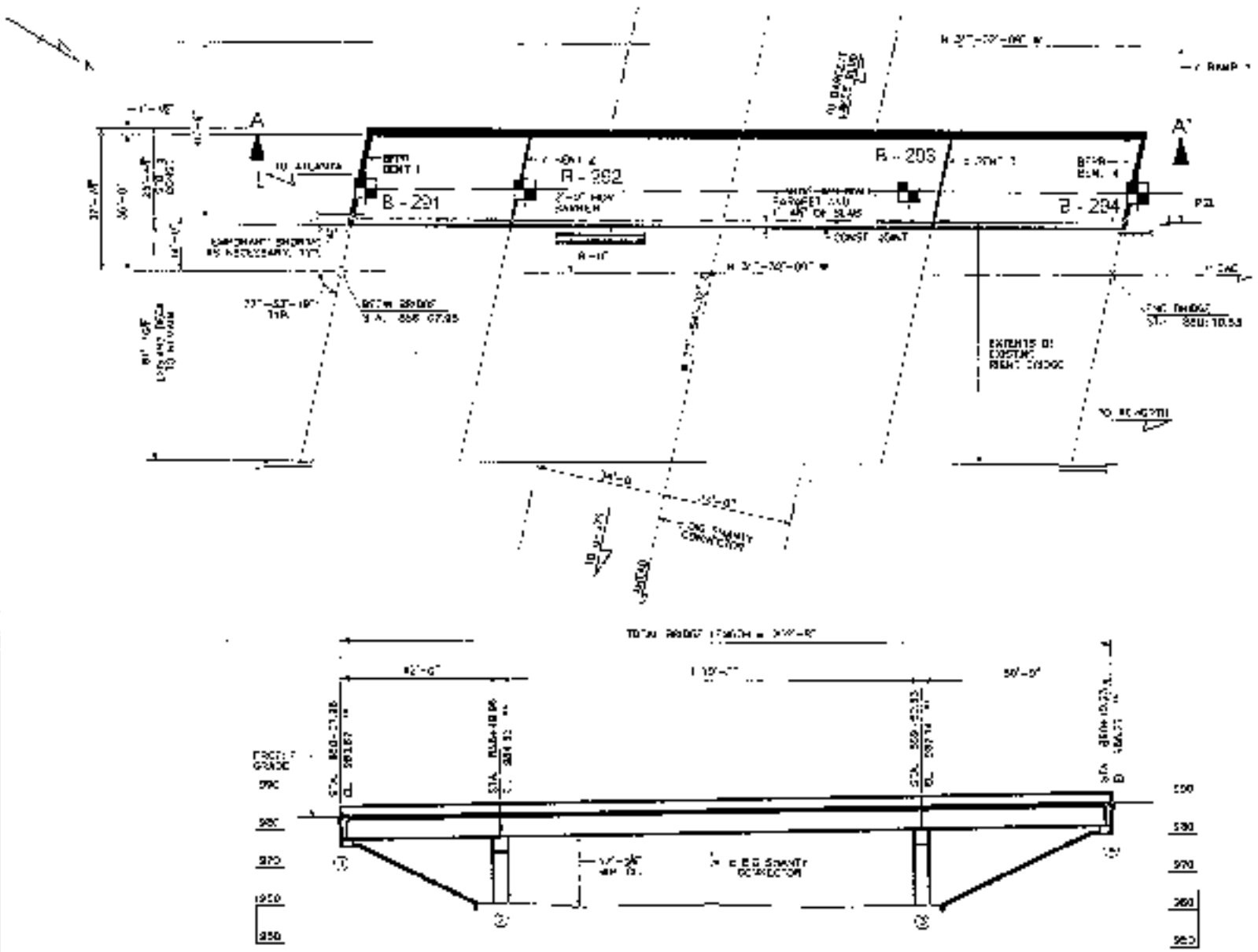

LEGEND:

B 201 BORING LOCATION

SCALE: 1" = 40'	GDOT PROJECT NUMBER:
DATE: 10/16/2020	NHF000-0073-00(242)
DRAWN BY: JK	PI No. 714130
REVIEWED BY: AZ	

FIGURE 2: BORING LOCATION PLAN
BRIDGE B-32: I-75 OVER BIG SHANTY CONNECTOR
NORTH WEST CORRIDOR PROJECT
COBB COUNTY, GEORGIA
WILLOVER PROJECT NO. ATL-17-8480(13)

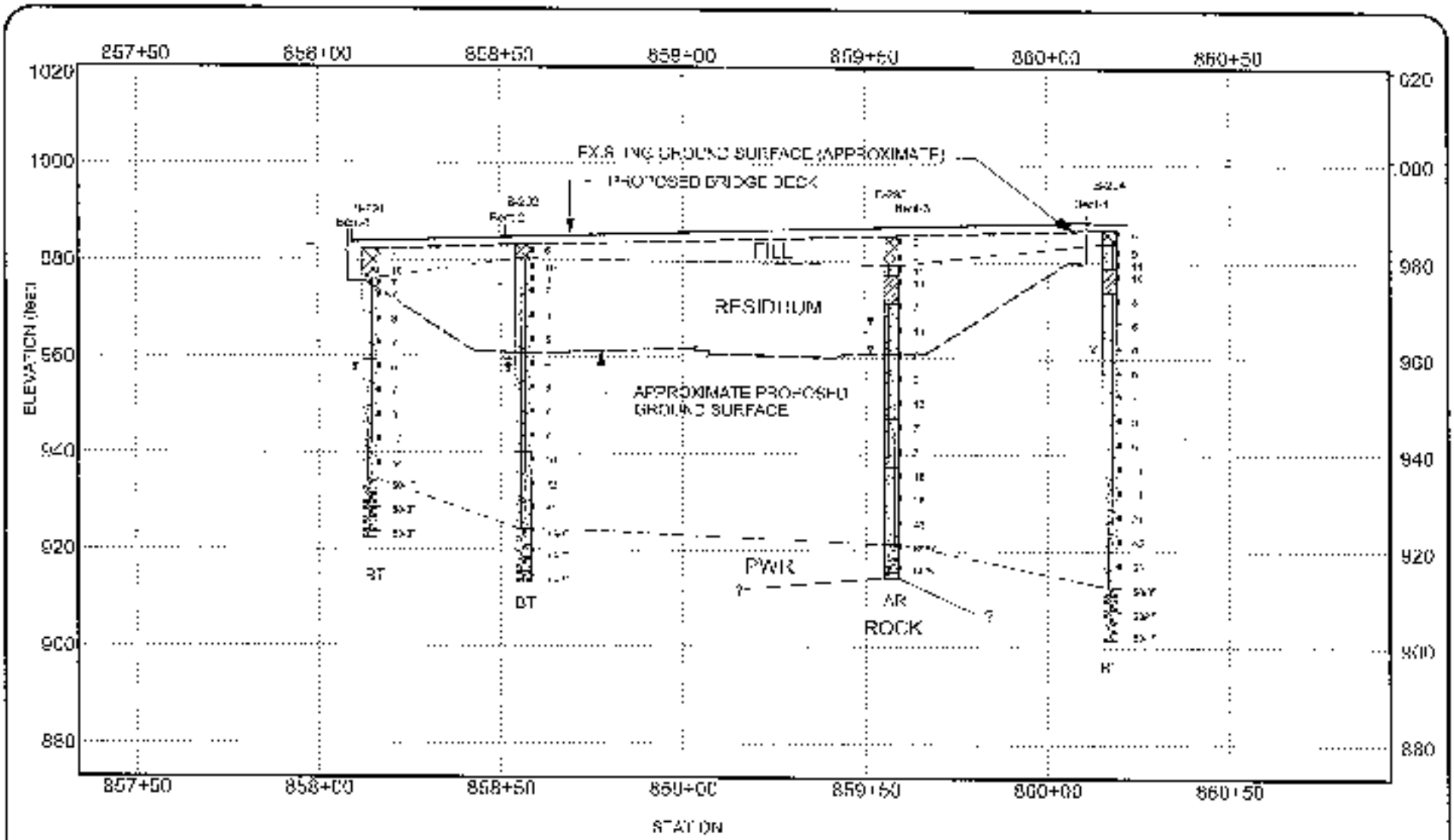

LEGEND:
T - Groundwater Table @ 24 hours
V - Groundwater Table @ Time of Boring
AR - Auger Refusal
BT - Boring Terminated
PWR - Partially Weathered Rock

SCALE : 1 inch = 30 feet (vertical)
1 inch = 10 feet (horizontal)

GENERALIZED SUBSURFACE PROFILE A-A'

I-75 Reversible Lanes Over Big Shanty Connector
GDOT Project No.: N-1020-0073-03(242)
PI No.: 7141-30
Cobb County, Georgia

PROJECT #	DATE	FIGURE
171-3463BFI3	Sep 01, 2009	3

APPENDIX I

BORING RECORD LEGEND

SM, CL, etc - GROUP SYMBOL based on Unified Soil Classification System
(Refer to ASTM D-2488 and Table 1 of D-2487)

N-VALUE BLOWS PER FOOT- Standard Penetration Resistance (SPT) blow count ,
the sum of the second and third 6- inch increments of the SPT test.
(Refer to ASTM D-1586)

CONSISTENCY / RELATIVE DENSITY Correlated with SPT Blow Count, N:

SILTS AND CLAYS

N (blows per foot)	Consistency
0 - 2	Very Soft
3 - 4	Soft
5 - 8	Firm
9 - 15	Stiff
16 - 30	Very Stiff
31 - 50	Hard
> 50	Very Hard

SANDS

N (blows per foot)	Relative Density
0 - 4	Very Loose
5 - 10	Loose
11 - 30	Medium Dense
31 - 50	Dense
> 50	Very Dense

NOTES:

Groundwater Measurements:

- ▼ Water level at time of backfilling
- ▽ Water level at time of boring
- ⊻ Caved level at 24 hours

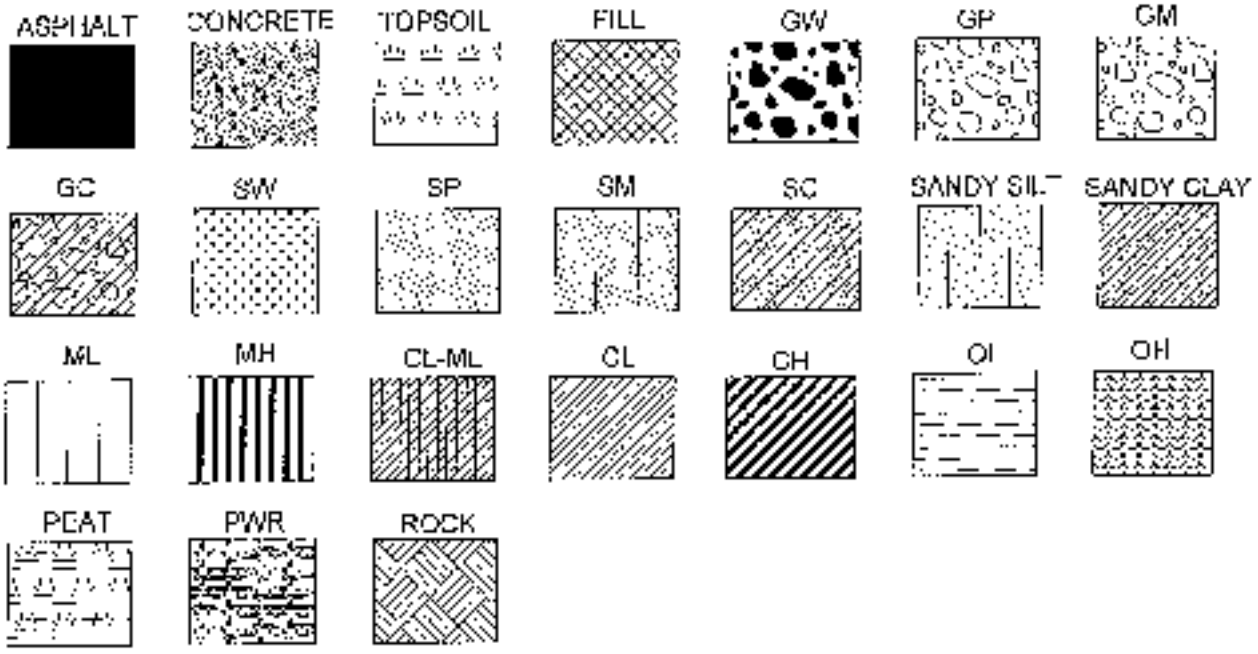

Wilmor Engineering Inc.
3772 Pleasantdale Road, Suite 165
Atlanta, Georgia 30340

UNIFIED SOIL CLASSIFICATION SYSTEM REFERENCE SHEET

MAJOR DIVISIONS			LETTER SYMBOL	TYPICAL DESCRIPTIONS
COARSE GRAINED SOILS MORE THAN 50% OF MATERIAL IS LARGER THAN #200 SIEVE SIZE	GRAVEL AND GRAVELLY SOILS MORE THAN 50% OF COARSE FRACTION RETAINED #4 SIEVE	CLEAN GRAVELS LITTLE OR NO FINES	(GW)	WELL-GRADED GRAVELS, GRAVEL-SAND MIXTURES, LITTLE OR NO FINES
			(GP)	POORLY GRADED GRAVELS, GRAVEL-SAND MIXTURES, LITTLE OR NO FINES
		GRAVELS WITH FINES APPRECIABLE AMOUNT OF FINES	(GM)	SILTY GRAVELS and GRAVEL-SAND-SILT MIXTURES
			(GC)	CLAYEY GRAVELS and GRAVEL-SAND-CLAY MIXTURES
	SAND AND SANDY SOILS MORE THAN 50% OF COARSE FRACTION PASSING #4 SIEVE	CLEAN SAND LITTLE OR NO FINES	(SW)	WELL GRADED SANDS, GRAVELLY SANDS, LITTLE OR NO FINES
			(SP)	POORLY GRADED SANDS, GRAVELLY SANDS, LITTLE OR NO FINES
		SANDS WITH FINES APPRECIABLE AMOUNT OF FINES	(SM)	SILTY SANDS and SAND-SILT MIXTURES
			(SC)	CLAYEY SANDS and SAND-CLAY MIXTURES
FINE GRAINED SOILS MORE THAN 50% OF MATERIAL IS SMALLER THAN #200 SIEVE SIZE	SILTS AND CLAYS LIQUID LIMIT LESS THAN 50		(ML)	INORGANIC SILTS AND VERY FINE SANDS, ROCK FLOUR, SILTY OR VERY FINE SANDS OR CLAYEY SILTS WITH SLIGHT PLASTICITY
			(CL)	INORGANIC CLAYS OF LOW TO MEDIUM PLASTICITY, GRAVELLY CLAYS, SANDY CLAYS, SILTY CLAYS, LEAN CLAYS
			(OL)	ORGANIC SILTS AND ORGANIC SILTY CLAYS OF LOW PLASTICITY
	SILTS AND CLAYS LIQUID LIMIT GREATER THAN 50		(MH)	INORGANIC ELASTIC SILTS, MICACEOUS OR DIATOMACEOUS FINE SANDY OR SILTY SOILS
			(CH)	INORGANIC CLAYS OF HIGH PLASTICITY, FAT CLAYS
			(OH)	ORGANIC CLAYS OF MEDIUM TO HIGH PLASTICITY, ORGANIC SILTS
HIGHLY ORGANIC SOILS			(PT)	PEAT, HUMUS, SWAMP SOILS WITH HIGH ORGANIC CONTENTS

ENGINEERING DESCRIPTION
OF
ROCK HARDNESS

Hardness	Description
Very hard	Cannot be scratched with knife or sharp pick. Breaking of hand specimens requires several hard blows of geologist's pick.
Hard	Can be scratched with knife or pick only with difficulty. Hard blow of hammer required to detach hand specimen.
Moderately hard	Can be scratched with knife or pick. can be excavated by hard blow of point of a geologist's pick. Hand specimens can be detached by moderate blow.
Medium	Can be grooved or gouged 1/16 inch deep by firm pressure on knife or pick point. Can be excavated in small chips to pieces about 1 inch maximum size by hard blows of the point of a geologist's pick.
Soft	Can be gouged or grooved readily with knife or pick point. Can be excavated in chips to pieces several inches in size by moderate blows of a pick point. Small thin pieces can be broken by finger pressure.
Very soft	Can be carved with knife. Can be excavated readily with point of pick. Pieces 1 inch or more in thickness can be broken with finger pressure. Can be scratched readily by fingernail.
Partially Weathered Rock	For engineering purposes, partially weathered rock (PWR) is locally defined as residual soils exhibiting Standard Penetration Test N-values in excess of 50 blows for 6 inches of penetration.

Project: Bridge 32: I-75 Reversible Lanes over Big Shanty Connector

Location: Cobb County, Georgia

Project Number: 171-3463BFI3; GDOT Proj. # : NH000-0073-03(242); PI #: 714130

HOLE No. B-291

Sheet 1 of 2

Location: BENT - 1

Azimuth: -- Angle from Horizontal: 90 Surface Elevation (ft): 982.48 Station: ST 858+14, 22' Lt. of BL

Drilling Equipment: CME 550 / MACTEC Drilling Method: HSA-Auto Hammer

Core Sizes: NA Samples: 14 Overburden (ft): 59 Rock (ft): NA Total Depth (ft): 59.0

Logged By: PT Date Drilled: 8/25/09

VERTICAL DEPTH (ft)	GRAPHIC LOG	SAMPLE TYPE	RECS	ROD %	MATERIAL DESCRIPTION	ELEVATION (feet)	STANDARD PENETRATION TEST DATA (blows/foot) 5 10 20 40 60 80	N VALUE
0		SS			TOPSOIL - 1 inch / FILL	980		7
					FILL: Loose reddish brown silty medium to fine **SAND** with asphalt fragments (slightly micaceous)			
5		SS						10
		SS			RESIDUUM: Loose orange brown and reddish brown silty medium to fine **SAND** SM	975		7
10		SS						7
						970		
15		SS						8
						965		
20		SS						7
						960		
25		SS			Loose to medium dense gray and orange brown silty medium to fine **SAND** (slightly micaceous) SM			5
						955		
30		SS						7
						950		
35		SS						8
						945		
40		SS						12
						940		
45		SS			Dense gray and orange brown silty medium to fine **SAND** (slightly micaceous) SM			44
					PARTIALLY WEATHERED ROCK: Sampled as very dense gray and brown silty medium to fine **SAND** with rock fragments (slightly micaceous) PWR	935		50/1"
55		SS						50/4"
59					Continued Next Page			

SAMPLER TYPE

SS - Split Spoon
ST - Shelby Tube
NQ - Rock Core 1-7/8"
NX - Rock Core, 2-1/8"
CU - Cuttings
CT - Continuous Tube

DRILLING METHOD

HSA - Hollow Stem Auger
CFA - Continuous Flight Auger
DC - Driven Casing
RW - Rotary Wash
RC - Rock Core

Hole No.

B-291

Project: Bridge 32: I-75 Reversible Lanes over Big Shanty Connector	**HOLE No. B-291**
Location: Cobb County, Georgia	Sheet: 2 of 2
Project Number: 171-3463BFI3; GDOT Proj. # : NH000-0073-03(242); PI #: 714130	Location: BENT - 1

VERTICAL DEPTH (ft)	GRAPHIC LOG	SAMPLE TYPE	REC%	RQD %	MATERIAL DESCRIPTION (Continued)	ELEVATION (feet)	STANDARD PENETRATION TEST DATA (blows/foot) 5 10 20 40 60 80	N-VALUE
		SS				925		50/5
					Boring was terminated at 59 feet below the existing ground surface.			
					Ground water was encountered at 25 feet below the ground surface at the time of boring completion and at 27.5 feet below the existing ground surface at 24 hours after boring completion.			

SAMPLER TYPE

SS - Split Spoon
ST - Shelby Tube
NQ - Rock Core, 1-7/8"
NX - Rock Core, 2 1/8"
CU - Cuttings
CT - Continuous Tube

DRILLING METHOD

HSA - Hollow Stem Auger
CFA - Continuous Flight Augers
DC - Driving Casing
RW - Rotary Wash
RC - Rock Core

Hole No. B-291

Project: Bridge 32: I-75 Reversible Lanes over Big Shanty Connector		**HOLE No. B-292**
Location: **Cobb County, Georgia**		Sheet 1 of 2
Project Number: **171-3463BFI3; GDOT Proj. # : NH000-0073-03(242); PI #: 714130**		Location: **BENT - 2**
Azimuth: --	Angle from Horizontal: **90**	Surface Elevation (ft): **983.36** Station: **ST 858+56, 22' Lt. of BL**
Drilling Equipment: **CME 550 / MACTEC**		Drilling Method: **HSA-Auto Hammer**
Core Boxes: **NA**	Samples: **16**	Overburden (ft): **68.5** Rock (ft): **NA** Total Depth (ft): **68.5**
Logged By: **PT**		Date Drilled: **8/20/09**

VERTICAL DEPTH (ft)	GRAPHIC LOG	SAMPLE TYPE	REC%	ROD %	MATERIAL DESCRIPTION	ELEVATION (feet)	STANDARD PENETRATION TEST DATA (blows/foot) 5 10 20 40 60 80	N VALUE
0		SS			TOPSOIL 1 inch	983.4		
					FILL: Loose reddish brown silty medium to fine **SAND** with rock fragments	/FILL / SM		
5		SS			RESIDUUM: Loose orange brown, gray and reddish brown silty medium to fine **SAND** (slightly micaceous)	980		6
		SS						10
10		SS				975		6
								7
15		SS				970		8
						965		
20		SS						5
25		SS			- with very loose zone	960		2
							Approx. proposed ground surface	
30		SS				955		6
35		SS				950		7
						945		
40		SS						7
					Loose to medium dense gray and brown silty medium to fine **SAND** with quartz fragments	SM 940		10
45		SS						
						935		20
50		SS						
					Very dense gray, white and brown silty	SM 930		51
55		SS						

Continued Next Page

SAMPLER TYPE

SS - Split Spoon
ST - Shelby Tube
NX - Rock Core, 2-1/8"
CU - Cuttings
C - Continuous Tube

DRILLING METHOD

HSA - Hollow Stem Auger
CFA - Continuous Flight Auger
DC - Driving Casing
RW - Rotary Wash
RC - Rock Core

Hole No.
B-292

Project: **Bridge 32: I-75 Reversible Lanes over Big Shanty Connector**

Location: **Cobb County, Georgia**

Project Number: **171-3463BPI3; GDOT Proj. # : NH000-0073-03(242); PI #: 714130**

HOLE No. B-292

Sheet 2 of 2

Location: **BENT - 2**

VERTICAL DEPTH (ft)	GRAPHIC LOG	SAMPLE TYPE	REC%	RQD %	MATERIAL DESCRIPTION (Continued)	ELEVATION (feet)	STANDARD PENETRATION TEST DATA (blows/foot) 5 10 20 40 60 80	N-VALUE
					medium to fine **SAND** with quartz fragments			
		SS			PARTIALLY WEATHERED ROCK: PWR Sampled as very dense gray, white and brown silty medium to fine **SAND**	925		50/5"
60		SS				920		50/2"
15		SS				915		50/2"
					Boring was terminated at 68.5 feet below the existing ground surface.			
					Ground water was encountered at 25 feet below the existing ground surface at the time of boring and at 25.7 feet below the existing ground surface 24 hours after boring completion.			

SAMPLER TYPE

SS - Split Spoon
ST - Shelby Tube
NC - Rock Core, 1-7/8"
NX - Rock Core, 2-1/8"
CU - Cuttings
CT - Continuous Tube

DRILLING METHOD

HSA - Hollow Stem Auger
CFA - Continuous Flight Augers
DC - Driving Casing
RW - Rotary Wash
RC - Rock Core

Hole No. **B-292**

SFTN 171-3463EF.GPJ 10/6/03

Project: Bridge 32: I-75 Reversible Lanes over Big Shanty Connector	**HOLE No. B-293**
Location: Cobb County, Georgia	Sheet 1 of 2
Project Number: 171-3463BFI3; GDOT Proj. #: NH000-0073-03(242); PI #: 714130	Location: BENT - 3

Azimuth: — Angle from Horizontal: 90 Surface Elevation (ft): 985.44 Station: ST 859+57, 22' Lt. of BL

Drilling Equipment: CME 550 / MACTEC Drilling Method: HSA-Auto Hammer

Core Boxes: NA Samples: 16 Overburden (ft): 71 Rock (ft): NA Total Depth (ft): 71.0

Logged By: PT Date Drilled: 8/26/09

VERTICAL DEPTH (ft)	GRAPHIC LOG	SAMPLE TYPE	REC%	RQD %	MATERIAL DESCRIPTION		ELEVATION (feet)	STANDARD PENETRATION TEST DATA (blows/foot)	N-VALUE
		SS			TOPSOIL - 1 inch	FILL	985.4		8
		SS			FILL: Loose reddish brown silty medium to fine **SAND** with rock fragments and trace roots		980		6
5		SS			RES DUUM: Medium dense reddish brown and gray silty medium to fine **SAND**	SM			11
		SS			Very stiff reddish brown medium to fine sandy **CLAY**	CL	975		19
10		SS			Loose orange brown, reddish brown and tan silty medium to fine **SAND** (slightly micaceous)	SM	970		7
15		SS					965		10
20		SS					960		8
25		SS			Loose orange brown silty medium to fine **SAND** with quartz fragments	SM	955		6
30		SS					950		10
35		SS			Loose gray, white and brown silty medium to fine **SAND** with quartz fragments (slightly micaceous)	SM	945		7
40		SS					940		7
45		SS			Medium dense to dense gray, white and brown silty medium to fine **SAND** with quartz fragments (slightly micaceous)	SM	935		18
50		SS							25
55		SS							

Approx. proposed ground surface

Continued Next Page

SAMPLER TYPE
SS - Split Spoon
ST - Shelby Tube
NC - Rock Core, 1 7/8"
NX - Rock Core, 2-1/8"
CU - Cuttings
CT - Continuous Tube

DRILLING METHOD
HSA - Hollow Stem Auger
CFA - Continuous Flight Augers
DC - Driving Casing
RW - Rotary Wash
RC - Rock Core

Hole No. B-293

Project: Bridge 32: I-75 Reversible Lanes over Big Shanty Connector

Location: Cobb County, Georgia

Project Number: 171-3463BFI3; GDOT Proj. #: NH000-0073-03(242); PI #: 714130

HOLE No. B-293

Sheet 2 of 2

Location: BENT - 3

VERTICAL DEPTH (ft)	GRAPHIC LOG	SAMPLE TYPE	RECS %	RQD %	MATERIAL DESCRIPTION (Continued)	ELEVATION (feet)	STANDARD PENETRATION TEST DATA (blows/foot) 5 10 20 40 50 50	N VALUE
60		SS			Medium dense to dense gray, white and brown silty medium to fine **SAND** with quartz fragments (slightly micaceous)	930		42
65		SS			PARTIALLY WEATHERED ROCK: Sampled as very dense gray and brown silty medium to fine **SAND** PWR	920		85/7"
70		SS						50/4"
71		CU			Auger refusal was encountered at 71 feet below the existing ground surface.	915		50/2"

Ground water was encountered at 24 feet below the existing ground surface at the time of boring.

Boring caved in at 18 feet below existing ground surface 24 hours after boring completion.

SAMPLER TYPE

SS - Split Spoon
ST - Shelby Tube
NQ - Rock Core, 2-7/8"
NX - Rock Core, 2-1/8"
CU - Cuttings
CT - Continuous Tube

DRILLING METHOD

HSA - Hollow Stem Auger
CFA - Continuous Flight Auger
DC - Driving Casing
RW - Rotary Wash
RC - Rock Core

Hole No.

B-293

Project: Bridge 32: I-75 Reversible Lanes over Big Shanty Connector
Location: Cobb County, Georgia
Project Number: 171-3463BFI3; GDOT Proj. #: NH000-0073-03(242); PI #: 714130

HOLE No. B-294
Sheet 1 of 2

Location: BENT - 4

Azimuth: -- Angle from Horizontal: 90 Surface Elevation (ft): 966.87 Station: ST 360+17, 22' Lt. of BL
Drilling Equipment: CME 550 / MACTEC Drilling Method: HSA-Auto Hammer
Core Boxes: NA Samples: 19 Overburden (ft): 83.5 Rock (ft): NA Total Depth (ft): 83.5
Logged By: PT Date Drilled: 8/27/09

VERTICAL DEPTH (ft)	GRAPHIC LOG	SAMPLE TYPE	REC%	RQD %	MATERIAL DESCRIPTION	ELEVATION (ft)	STANDARD PENETRATION TEST DATA (blows/foot) 5 10 20 40 50 50	N-VALUE
0		SS			TOPSOIL - 7 inch	966.9		
					FILL: Loose reddish brown silty medium to fine **SAND** with rock fragments (slightly micaceous)	FILL / SM		
5		SS				960		9
		SS			RESIDUUM: Loose to medium dense reddish brown and gray silty medium to fine **SAND**			11
		SS				CL		6
10		SS			Very stiff reddish brown medium to fine sandy **CLAY**	955		
					Loose orange brown and reddish brown silty medium to fine **SAND** with rock fragments (slightly micaceous)	SM		5
15		SS						
20		SS				940		6
25		SS						
30		SS				925		5
					Loose to medium dense orange brown and gray silty medium to fine **SAND** (slightly micaceous)	SM		
35		SS				910		7
40		SS						8
45		SS			- with quartz fragments	895		6
50		SS				880		11
55		SS				865		11
60		SS						
65		SS				SM		

Continued Next Page

SAMPLER TYPE
SS - Split Spoon
ST - Shelby Tube
NQ - Rock Core, 1 7/8"
NX - Rock Core, 2-1/8"
CU - Cuttings
CT - Continuous Tube

DRILLING METHOD
HSA - Hollow Stem Auger
CFA - Continuous Flight Augers
DC - Driving Casing
RW - Rotary Wash
RC - Rock Core

Hole No.
B-294

Project: **Bridge 32: I-75 Reversible Lanes over Big Shanty Connector**

Location: **Cobb County, Georgia**

Project Number: **171-3463BFI3; GDOT Proj. # : NH000-0073-03(242); PI #: 714130**

HOLE No. B-294

Sheet 2 of 2

Location: **BENT - 4**

(Continued)

VERTICAL DEPTH (ft)	GRAPHIC LOG	SAMPLE TYPE	RECX	ROD %	MATERIAL DESCRIPTION	ELEVATION (feet)	STANDARD PENETRATION TEST DATA (blows/foot) 5 10 25 40 60 80	N-VALUE
65		SS			Medium dense gray and brown silty medium to fine **SAND** with quartz fragments (slightly micaceous)	930		21
		SS			Dense to very dense gray and brown silty medium to fine **SAND** with quartz fragments (slightly micaceous)	SM 925		45
70		SS				920		53
		SS				915		
75		SS			PARTIALLY WEATHERED ROCK: Sampled as very dense gray and brown silty medium to fine **SAND** with rock fragments	PWR		50/4"
80		SS				910		50/4"
		SS				905		50/1"

Boring was terminated at 83.5 feet below the existing ground surface.

Ground water was encountered at 25 feet below the existing ground surface at the time of boring.

SAMPLER TYPE

SS - Split Spoon
ST - Shelby Tube
RC - Rock Core, 1-7/8"
NX - Rock Core, 2-1/8"
CU - Cuttings
CT - Continuous Tube

DRILLING METHOD

HSA - Hollow Stem Auger
CFA - Continuous Flight Augers
DC - Driving Casing
RW - Rotary Wash
RC - Rock Core

Hole No.

B-294