The Analysis and Design of Simply Supported Beams for Highway Bridges

Computer Program
Fortran IV

A USER'S MANUAL

STATE HIGHWAY DEPARTMENT OF GEORGIA
BRIDGE DIVISION

DISCLAIMER

Although this program has been subjected to many rigorous tests - all with excellent results - no warranty, expressed or implied, is made by The State Highway Department of Georgia as to the accuracy and functioning of the program, nor shall the fact of distribution constitute any such warranty, and no responsibility is assumed by The State Highway Department of Georgia in any connection therewith.

THIS VOLUME, OR ANY PART THEREOF, MUST
NOT BE REPRODUCED IN ANY FORM NOR
DISTRIBUTED TO ANY OTHER ORGANIZATION
WITHOUT THE WRITTEN PERMISSION OF
THE STATE HIGHWAY DEPARTMENT OF GEORGIA.

TABLE OF CONTENTS

		PAGE
I.	DESCRIPTION OF THE PROGRAM	1-1
	ERROR MESSAGES	1-5
II.	ROLLED BEAM (RB)	2-1
	INPUT DATA	2-1
	OUTPUT DATA	2-14
	EXAMPLE PROBLEMS	2-21
III.	ROLLED BEAM WITH COVER PLATES (RP)	3-1
	INPUT DATA	3-1
	OUTPUT DATA	3-15
	EXAMPLE PROBLEMS	3-24
IV.	COMPOSITE ROLLED BEAM (CB)	4-1
	INPUT DATA	4-1
	OUTPUT DATA	4-16
	EXAMPLE PROBLEMS	4-27
V.	PLATE GIRDER (PG)	5-1
	INPUT DATA	5-1
	OUTPUT DATA	5-12
	EXAMPLE PROBLEMS	5-20
VI.	COMPOSITE PLATE GIRDER (CG)	6-1
	INPUT DATA	6-1
	OUTPUT DATA	6-13
	EXAMPLE PROBLEMS	6-23
VII.	CONCRETE BEAM (TB)	7-1
	INPUT DATA	7-1
	OUTPUT DATA	7-11
	EXAMPLE PROBLEMS	7-18

I. DESCRIPTION OF THE PROGRAM

"The Analysis and Design of Simply Supported Beams for Bridges" is a problem oriented computer program. This program performs all the necessary computations and logical decisions for a complete analysis of a simply supported beam for a highway, pedestrian, or railroad bridge. The analysis will solve for the final moments, stresses, shears, shear connector spacing, reaction, and deflections produced by the dead loads, the Standard Highway Loads (AASHO), or the Cooper Railroad Loads (AREA). The program also has design capabilities. For example, the program can select a beam size, cover plate thickness, width and length.

Some of the common types of beams that the program can analyze or design are:

A. STEEL BEAMS.

1. I-Beam of standard WF section . (analyze and design)
2. I-Beam of standard WF section with cover plates of variable size and length. (analyze and design)
3. I-Beam of non-standard section. (analyze only)
4. Plate girder. (analyze and design)

B. COMPOSITE CONCRETE - STEEL BEAMS.

1. I-Beam of standard WF section with or without cover plates. (analyze and design)
2. I-Beam of non-standard section. (analyze only)
3. Composite plate girder. (analyze and design)

C. CONCRETE BEAMS.

1. 'T' beam.(analyze and design)
2. Rectangular. (analyze and design)

3. Flat slab. (analyze and design)

4. Resisting moments for a given section and reinforcing steel placement.

Loads considered in the analysis or design are :

A. DEAD LOADS.

Three types of dead loads are considered in the analysis or design as follows:

1. Dead load due to the weight of the beam itself, which takes into account the variation of the cross section.

2. Superimposed uniformly distributed dead load along the beam. Composite and non-composite uniform dead loads are computed separately.

3. Non-composite concentrated dead loads along the beam. (Composite concentrated dead loads must be distributed in the composite uniform dead load.)

B. LIVE LOADS.

The live loads considered in the analysis or design are:

1. Standard Highway Loads (H or HS and Lane).

2. Special Military Loading (optional).

   Military or Interstate live load consists of two 24 kip axles spaced 4 feet apart.

3. Standard Railroad Loads (Cooper E series).

4. Impact Allowance.

5. Live Load on Sidewalks.

The highway loading on the roadway of the bridge consists of a standard truck or a lane load which is equivalent to truck trains. Two systems of loading are provided for in the program, the H loading and the HS loading as defined in the A.A.S.H.O. Specifications, 1969. For either type of

loading, the program computes the effect of the standard truck loading, the corresponding lane loading, and the optional military loading, then selects the maximum of the three. The truck loading, lane loading, or military loading can be eliminated from consideration when necessary. Only sidewalk live load can be considered when necessary, i.e., pedestrian bridges.

The railroad loading on the bridge consists of the Cooper E series as defined in the A.R.E.A. Specifications.

Live load effects produced by H, HS, or military loadings are increased automatically for an impact allowance. This allowance is computed as a variable factor depending on the span length and the type data under consideration in accordance with section 1.2.12. of the A.A.S.H.O. Specifications, 1969. The railroad live load effects are also increased for impact, but the rate of increase is input by the Engineer.

The live load on the sidewalk is considered as a uniformly distributed load which is placed on a part or total length of the beam as required to produce maximum moments, shears, etc., at the point under consideration.

The input information required for the solution consists basically of the loads to be considered, the properties of the material, and the type of beam to be analyzed or designed. The program will perform the following operations for each problem:

1. Look up the properties of any 18 through 36 inch depth series wide flange beams. The properties of these beams are stored in the program.
2. Compute the physical properties of the cross section, such as area, moment of inertia, etc., at each change in cross section.
3. Solve for the dead load moments, stresses, shears, etc at the span twentieth points.

4. Place or move the live load to select the maximum moments and shears at the span twentieth points and at the end support.
5. Compute the dead load deflections for each type of dead load at the span twentieth points, and the live load deflections at the center line of the span due to truck, lane, military, sidewalk or railroad live loading.
6. Compute the shear connector spacing and the live load shear range for composite construction at the span twentieth points.
7. Compute the allowable live load deflections for truck loading, sidewalk loading, or railroad loading.

In addition to the above, the program has the following design capabilities:

1. Select a rolled WF non-composite section without cover plates.
2. Determine cover plate size and length in the design of a rolled beam (WF) with cover plates, and composite beam with cover plates.
3. Select the web and/or plates necessary to design a non-composite or a composite plate girder.
4. Compute the amount of steel to be used in a concrete beam.

This manual is divided into sections. Each section is concerned with a specific type of beam. All necessary instructions to enter the input and interpret the output are included in the section dealing with that type of beam. When referring to the input explanation for a composite rolled beam it is not necessary to see the non-composite rolled beam section for further details.

Each section of this manual is divided into three parts. Part one deals with the input data. Part two interprets the output data, and part three describes some example problems.

ERROR MESSAGES

The program checks the validity of some of the input data and will list one of the following messages when an error is detected:

1. ROLLED BEAM UNAVAILABLE m.

   The program has tried all beams to the 36 WF 300 and cannot satisfy the stress or the deflection requirements of the loading conditions. Check for possible key punch or input errors. m is the problem number.

2. ERROR i PROBLEM NUMBER m.

   Where i is the error number and m is the number of the problem given in the IDENTIFICATION.

Following is a list of the error numbers (i) and the possible cause of each error.

ERROR (i)	POSSIBLE CAUSE
1	1. The first card of the problem does not contain an * in card column one. 2. An additional IDENTIFICATION card has been indicated but not found. 3. SPAN DATA card (1 in c.c. 1) is out of sequence or not found. 4. LENGTH = 0.0 5. DFM = 0.0 6. NPL is greater than 40. 7. LIVE LOAD class is not H, HS, or RR. 8. CODE is not RB, RP, CB, PG, CG, or TB
2	1. CONCENTRATED LOADS card (s) are not found, or out of sequence.
3	1. CONCENTRATED LOADS are indicated but NPL is given incorrectly. 2. BEAM DATA (3 in c.c. 1) is expected but not found.

ERROR (i)	POSSIBLE CAUSE
4	1. A card with 4 in c.c. 1 is expected but not found. 2. SECTION PROPERTIES are incorrectly input i.e. I_o, YTOP, or YBOT is less than or equal to zero. 3. A CONCRETE BEAM DATA card is expected but not found. 4. Number of Rows = 0
5	1. Program unable to complete Concrete Beam design.

The following systems messages are sometimes observed:

XXX223I A numeric field has alphabetic information in it. Cards out of order can cause this.

XXX225I A data exception has occurred. Trying to divide by zero can cause this.

******* The number that was to be printed in this location was too big to fit in the available format.

II. ROLLED BEAM (RB)

INPUT DATA

A Rolled Beam is considered any rolled shape used as a beam, i.e., H section, WF section. All Rolled Beam spans are non-composite and without cover plates. Section properties (area, depth, flange width and thickness, web thickness, and moment of inertia) of all 18, 21, 24, 27, 30, 33, and 36 inch depth wide flange sections are available in the program.

A. IDENTIFICATION (*in c.c.1).

The IDENTIFICATION lines are used to supply any pertinent information about the bridge that the Engineer wishes to head the output listing. The project number, county, date, and the designer's name or initials should always be given. Card columns 2-4 of the first line are reserved for the program number.

Card columns 5-8 of the first line are reserved for the problem number. This space is always left blank by the Engineer since the problem number is assigned from the log book of the Bridge Division computer problems. The problem number is associated with any error messages and appears on the output listing.

Any number of IDENTIFICATION lines may be used to enter remarks, etc. Whenever more than one line (card) is used, the code "CONT" must be entered in card columns 65-69 of all lines (cards), except the last line, to indicate to the program that another IDENTIFICATION card will follow. If only one line (card) of IDENTIFICATION is used, "CONT" is not required.

B. SPAN DATA (1 in c.c. 1).

The SPAN DATA card gives information relating to the span, generally without regard to the type of beam under consideration. The digit one (1) in card column one is used for identification and is of no significance to the Engineer.

1. CODE (c.c. 2-4) Form: RBX.

   a. TYPE (c.c. 2, 3) Form: RB.

      Enter the TYPE of beam in card columns 2, 3. "RB" defines a Rolled Beam with no cover plates. The Rolled Beam (RB) code is also used to define an unusual beam section, i.e., a steel H section, etc.

   b. D/A (c.c. 4) Form: X (blank or 1).

      The digit one (1) indicates that a given section is to be analyzed, and a blank (or zero) indicates that the beam is to be designed (determined). Any other character is illegal.

2. LIVE LOAD (c.c. 5-11). This input data defines the class of live load and the various loads that are to be omitted.

   a. CLASS (c.c. 5-8)

      The LIVE LOAD CLASS is entered in card columns 5-8, i.e., HS20, H 15, RR80, etc. Following are the live loads considered by the program.

      Highway live loads:

      HS20* (AASHO designation HS20-44)

      HS15 (AASHO designation HS15-44)

      H 20 (AASHO designation H20-44)

      H 15 (AASHO designation H15-44)

      H 10 (AASHO designation H10-44)

(*This number can be increased or decreased by any amount to check the overstress provisions of the AASHO Specifications.)

The program uses 80% of the input value for the largest wheel load. Uniform lane load and concentrated lane loads are proportioned accordingly. Moments are computed with the wheel loads adjusted by impact and the distribution factor for moments (DFM). For the end reaction, the wheel at the support is adjusted by the impact factor and the distribution factor for shear (DFV). Intermediate shear values are computed with the wheel loads adjusted by the impact factor for the loaded span and the distribution factor for moments. Deflections are a function of the wheel loads adjusted by the impact factor and the distribution factor for deflections (DFD).

Railroad live loads:

RR80 (AREA Cooper E 80 load).

RR72 (AREA Cooper E 72 load).

RR** (AREA Cooper E ** load).

The program computes the moments, shears, and approximates the deflection for one rail adjusted by impact and distribution factors using one-half of the input value (80,72, etc.) as the largest wheel load.

b. T (c.c. 9) Form: X (blank or 1).

The truck live load can be eliminated from consideration by entering the digit one (1) in card column 9 when using a

standard highway loading. Leave blank if truck loading is to be considered.

c. L (c.c. 10) Form: X (blank or 1).

The lane live load can be eliminated from consideration by entering the digit one (1) in card column 10 when using a standard highway loading. Leave blank if lane loading is to be considered.

d. M (c.c. 11) Form: X (blank or 1).

The military live load can be eliminated from consideration by entering the digit one (1) in card column 11 when using a standard highway loading. Leave blank if military loading is to be considered.

Sidewalk live load only can be achieved by placing 111 in T, L, M (c.c. 9, 10, 11) with a standard highway load. This eliminates the truck, lane, and military from consideration leaving the sidewalk load as the only live load when computing moments, stresses, shears and deflections.

The omission of truck, lane, and military live load has no meaning when railroad live load is designated.

3. LENGTH (c.c. 12-17) Form: XXX.XXX feet.

LENGTH is the design span length in feet from center line of bearing to center line of bearing.

4. DFM (c.c. 18-21) Form: X.XXX ratio.

DFM, the distribution factor for moments, is the proportion of one row of wheels for highway and railroad loadings acting on the beam for

moment and intermediate shear. This factor must always be greater than zero.

5. DFV (c.c. 22-25) Form: X.XXX ratio.

DFV, the distribution factor for end shear, is the proportion of one wheel on the beam at the end support for highway live load. When railroad live load is indicated, DFV is the amount the loads are increased for impact.

6. DFD (c.c. 26-29) Form: X.XXX ratio.

DFD, the distribution factor for deflections, is the proportion of one row of wheels for highway and railroad live loadings acting on the beam for calculating live load deflections. DFD is completely independent of DFM or DFV.

7. NPL (c.c. 30, 31) Form: XX (1-40).

NPL is the number of concentrated loads in the span.

A maximum of forty is available.

8. WDLnc (c.c. 32-35) Form: X.XXX kips per foot.

WDLnc is the weight of the uniform dead load (slab, coping, curb, hand-rail, utilities, etc.) in kips per foot. The weight of the beam should not be included if the beam is a standard (18-36) WF shape.

9. WDLc (c.c. 36-39) Form: X.XXX kips per foot.

WDLc is used to separate dead loads when necessary, i.e., the weight of future paving or future construction. The value placed in WDLc is used to compute total stresses but the moments, shears, and deflections will not be added to the total moments, shears, and deflections given in the output data.

10. WSWK (c.c. 40-43) Form: X.XXX kips per foot.

WSWK is the uniform sidewalk live load in kips per foot. The deflection resulting from this load is added to the highway (H,HS) or railroad (RR) live load deflection when checking to see if the allowable live load deflection (L/1000) is exceeded. It is assumed that the maximum sidewalk deflection and the maximum highway or railroad deflection would be coincidental.

11. E BEAM x 10^6 (c.c. 44-47) Form: XX.XX mpsi.

This is the Modulus of Elasticity of the beam material in million pounds per square inch, and is used in computing deflections. If a value of E equal to zero (0) is entered or this data field is left blank, the program will by-pass all computations for deflections.

12. WT.BM. (c.c. 48-51) Form: X.XXX kips per foot.

This is the uniform weight of the non-standard beam specified in "SECTION PROPERTIES", when the weight of the beam is considered separate from the other uniform dead loads. However, if a standard 18, 21, 24, 27, 30, 33, or 36 wide flange section is specified, this data is not required.

13. ALLOWABLE STRESS (c.c. 52-59)

a. STEEL (c.c. 52-55) Form: XX.XX ksi.

STEEL is the allowable stress in ksi in the beam to determine which grade of A572 to consider, or the ALLOWABLE STRESS for other grades or metals. If this is left blank, TYPE STEEL will govern the allowable stress. The allowable steel stress

is not required for A36, A441, or A588 types of steel.

b. CONC (c.c. 56-59) Form: X.XXX ksi.

This is the allowable stress in ksi in the concrete. Therefore, this data is not required with a Rolled Beam (RB) span.

14. WT.BM.MAT'L (c.c. 60-62) Form: XXX pounds per cu.ft.

This is the weight of the beam material in pounds per cubic foot. This data is not required for the Rolled Beam (RB) span.

15. TYPE STEEL (c.c. 63-65) Form: XXX (36, 441, etc.)

The program has provisions to use A36 (enter 36), A441 (enter 441), A588 (enter 588), A572 (enter 572), or A514 (enter 514) steel. When type A572 is used, the ALLOW. STRESS (STEEL card columns 52-55) must be given to show which grade is to be considered. If STEEL (c.c. 52-55) and TYPE STEEL (c.c. 63-65) are both blank, type A36 steel allowable stresses are used. Do not under any circumstances enter the letter "A", or any other alphabetic characters.

C. CONCENTRATED LOADS (2 in c.c. 1)

Card columns one and two are used to keep the cards in sequence and contain 21, 22, 25, etc. to 30. The input data form shows two cards (the program has provisions for ten). When necessary, write between the lines or attach extra forms to provide space for the required CONCENTRATED LOADS.

1. Xn (c.c. 3-8, 15-20, 27-32, 39-44) Form: XXX.XXX feet.

Xn is the distance in feet from the left support to the concentrated load (diaphragm, handrail post, utility pole, sign, etc.)Pn. The maximum number of loads is forty. The distances may or may not be

of increasing magnitude from the left support.

2. Pn (c.c. 9-14, 21-26, 33-38, 45-50) Form: XXX.XXX kips.

Pn is the concentrated load in kips.

D. STEEL BEAM DATA (3 in c.c. 1)

This card indicates to the program the standard 18 through 36 wide flange beam or the non-standard section that is to be analyzed (D/A=1). Also this card tells the program which beam to try for the first trial design (D/A=0). The different design options are outlined below. If a wide flange (18 through 36 inches depth) beam is indicated, the "SECTION PROPERTIES" (c. c. 18-35) are not required.

1. ROLLED BEAM (c.c. 2-17) BEAM 1 & 2 Form: XXWFXXX & XXWFXXX

a. DEPTH (c.c. 2, 3 and 9, 10) Form: XX (00,18,21,24,27, 30,33, or 36)

1) An analysis (D/A=1) problem has two options:

Option a) If DEPTH is given as zero (blank), a non-standard shape is indicated and properties of the section being analyzed must be given in "SECTION PROPERTIES".

Option b) If a standard wide flange beam is being analyzed, enter the nominal DEPTH (18,21, etc.) in these card columns. The weight in pounds per foot is entered in "WEIGHT".

2) A design (D/A=0)problem has three options:

Option a) If the DEPTH is given as zero, the "WEIGHT" must also be zero (blanks are not allowed), the

program uses the span length in inches divided by 25 to determine the minimum nominal depth rolled steel shape to consider for the first trial design. Beginning with the lightest beam in this series, the beams are checked until a beam is found, if possible, that will support the loads without exceeding the allowable stress or deflection requirements. If none work, the next deeper series of beams is checked, and so forth, until a beam is found, if possible, that will support the loads. All deeper, lighter beams are then examined to see if any of them will work. The lightest acceptable beam, of those examined, is presented in the output.

Option b) If the DEPTH is given as 18, 21, ...or 36 and the WEIGHT is defined as zero (blank), the program checks the lightest beam with this nominal depth to see if it will support the loads without exceeding the allowable stress or deflection requirements. If this beam works, it is presented in the output. If the lightest beam does not work, the next heavier beam in this specified DEPTH series is checked, and so forth, until a beam is found that will work. When no beam with the specified DEPTH will meet the requirements, the lightest beam in the next deeper series is checked, then the next heavier, and so forth, until an acceptable

beam is found. If no beam will meet the requirements, "ROLLED BEAM UNAVAILABLE" is printed in the output. When an acceptable beam is found, no other beams are examined. This option can be used when the depth of the section, and not the weight, is the controlling factor in the design.

Option c) If the DEPTH is 18, 21, ..or 36 and the WEIGHT is also given, the program begins with this beam and examines it to see if it will support the loads without exceeding stress and deflection limitations. If this beam will work the weight is saved; if this beam will not work, the next heavier beam is checked and so forth, until a beam that will work, if possible, is found. Then remaining deeper beams lighter than the selected beam are checked to see if any of them will support the loads. The lightest beam that will function, of those checked, is presented in the output.

b. WEIGHT (c.c. 6-8 and 13-15) Form: XXX pounds per foot.

WEIGHT is the weight of the rolled steel shape in pounds per foot of the beam being analyzed (D/A=1) or the first trial design beam (D/A=0) of option c. above.

c. P (c.c. 16) Form: X (0,blank or 1)

The digit one (1) signals the program to design both BEAM 1 and BEAM 2 options. A zero or blank indicates only the design of BEAM 1 option is desired. See example RB-3 on page 2-31.

d. NP (c.c. 17) Form: X (0, blank or 1).

The digit one (1) input tells the program to design the beam options specified as 1 and 2 without plates (No Plates). Therefore, it has no meaning with the "RB" code, i.e., leave blank.

Note: The P and NP codes are applicable to Beam Types "RB", "RP", "CB" only. The two beam options are applicable to Beam Types "RB", "RP", and "CB". The BEAM 2 option is available for design only (D/A=0), i. e., only one beam can be analyzed (D/A=1) with each input form.

EXAMPLES

TYPE	D/A	ROLLED BEAM DEPTH WEIGHT	EXPLANATION
RB	1	24WF100	Analyze a 24WF100 for the given loads. See example RB-1.
RB	0	00WF000	Using L/25 to determine minimum acceptable depth, select the lightest workable beam in this series or any deeper series. Shallower beams are not considered. L is the span design length in inches. See example RB-2. (Option a, page 2-27).
RB	0	24WF000	Select 24 series beam, if possible. Shallower beams are not examined. Deeper beams tried only when necessary. See example RB-3. (Option b, page 2-31).
RB	0	24WF100	Starting with a 24WF100 examine all beams from 24WF100 to 36WF300 in AISC tables. Print lightest functional beam of those examined. See example RB-4. (Option c, page 2-37).
RB	1	00WF000	This analysis coding indicates that a non-wide flange section is to be analyzed. Therefore, the "Section Properties" are required input data. See example RB-5. (On page 2-41).

2. SECTION PROPERTIES (c.c. 18-35) For analysis (D/A=1) only.

SECTION PROPERTIES gives the program the capability to analyze any section, such as: H section, WF section with depth less than 18", or any special built-up section. SECTION PROPERTIES are not required when a ROLLED BEAM has been defined because the program has access to most WF rolled beam properties, i.e., the wide flange shape properties are stored in the program. To check the actual stress against the allowable stress, ALLOW. STRESS (STEEL c.c. 52-55 card no. 1 in c.c. 1) should be given.

a. Io $IN.^4$ (c.c. 18-25) Form: XXXXXXX.X inches to the fourth power.

This is the moment of inertia of the section being analyzed in inches to the fourth power.

b. YTOP (c.c. 26-30) Form: XX.XXX inches.

YTOP is the distance in inches from the centroid to the extreme fiber at the top of the section being analyzed.

c. YBOT. (c.c. 31-35) Form: XX.XXX inches.

YBOT is the distance in inches from the centroid to the extreme fiber at the bottom of the section being analyzed.

Leave the remainder of the Steel Beam Data card blank.

ROLLED BEAM

OUTPUT DATA

A. The first page of the output listing contains the input data and should be checked to verify that the proper quantities were punched in the input data cards.

B. The second page of the output listing tabulates the BEAM PROPERTIES, the MOMENTS (K-FT.) and the STRESS (PSI) at the 1/20th points in the span for the left half of the span.

1. BEAM PROPERTIES: (From AISC Handbook)

   a. BEAM XXWFXXX Example: 27WF 84

      Nominal depth and weight in pounds per foot of the rolled steel shape. If the problem is a design, this is the beam selected by the program.

   b. AREA is the area in square inches of the WF beam.

   c. DEPTH is the depth in inches of the WF beam.

   d. FL.W is the flange width in inches of the WF beam.

   e. FL.T is the flange thickness in inches of the WF beam.

   f. WEB T is the web thickness in inches of the WF beam.

   g. I is the moment of inertia in inches to the fourth power of the WF beam.

2. MOMENTS (K-FT.) AT SPAN 1/20 POINTS.

   a. SP lists the span points in 20ths.

   b. GIRDER lists the moments in kip-feet due to the weight of the beam only.

c. P-LOAD lists the moments in kip-feet due to the concentrated loads only.

d. NON-C lists the moments in kip-feet due to the uniform dead load (WDLnc) only.

e. TOT.NC lists the sum of the GIRDER, P-LOAD, and NON-C moments in kip-feet.

f. COMP. lists the moments in kip-feet due to the uniform dead load input (WDLc) only.

g. SIDEWK lists the moments in kip-feet due to the sidewalk live load.

h. LIVE LOAD lists the moments in kip-feet due to the live load. Moments due to highway live loads include impact while railroad moments do not include impact. The letter code after the moment indicates the type of live load that governs as follows:

1) T designates the moment is due to the truck live load.

2) L designates the moment is due to the lane live load.

3) M designates the moment is due to the military live load.

4) R designates the moment is due to the railroad live load.

i. RR-I lists the moment in kip-feet due to railroad impact and is considered for railroad live load only.

3. STRESS (PSI) AT SPAN L/20 POINTS.

A positive stress indicates compression. A negative stress indicates tension.

a. MINIMUM STRESS

1) SP lists the span point in 20ths.

2) TOP-S lists the minimum stress in psi at the top of the beam due to the dead loads.

3) BOT-S lists the minimum stress in psi at the bottom of the beam due to the dead loads.

b. MAXIMUM STRESS: If the problem is a design, the maximum stress should not exceed the allowable stress.

1) TOP-C lists the maximum stress in psi at the top of the concrete for a composite beam. For a rolled beam (RB) this has a value of zero (0).

2) TOP-S lists the maximum stress in psi at the top of the beam due to the dead and live loads.

3) BOT-S lists the maximum stress in psi at the bottom of the beam due to the dead and live loads.

c. ALLOWABLE FS lists the allowable stress in the steel (base metal) considering the type of steel and/or the beam group. Fatigue is not considered, i.e., fatigue does not control base metal allowable stresses in simple spans.

d. R FACTOR

1) TOP-S lists the ratio of the minimum stress to the maximum stress at the top of the beam.

2) BOT-S lists the ratio of the minimum stress to the maximum stress at the bottom of the beam.

C. The third page of the output listing tabulates the SHEARS (KIPS), the DEAD LOAD DEFLECTIONS (INCHES), the SHEAR RANGE (KIPS), the SHEAR CON. SPAC (IN), and the LIVE LOAD DEFLECTIONS (INCHES).

Shear is not considered when designing a Rolled Beam.

1. SHEARS (KIPS) AT SPAN 1/20 POINTS.

   a. SP lists the span point in 20ths.

   b. GIRDER lists the shears in kips due to the weight of the beam only.

   c. P-LOAD lists the shears in kips due to the concentrated loads only.

   d. NON-C lists the shears in kips due to the uniform dead load only (WDLnc).

   e. TOT.NC lists the total of GIRDER, P-LOAD, and NON-C.

   f. COMP. lists the shears in kips due to the uniform dead load given as WDLc.

   g. SIDEWK lists the maximum positive shears in kips due to the sidewalk live load.

   h. LIVE LOAD lists the maximum shears due to the standard highway or railroad live load. Shears due to highway live loads include impact while railroad shears do not include impact. The letter code after the shear value indicates the type of live load which controlled as follows:

      1) T designates the shear is due to the truck live load.

      2) L designates the shear is due to the lane live load.

      3) M designates the shear is due to the military live load.

      4) R designates the shear is due to the railroad live load.

i. RR-I lists the shears due to railroad impact and is considered with railroad live load only.

2. DEAD LOAD DEFLECTIONS (INCHES)

a. SP lists the span point in 20ths.

b. GIRDER lists the deflection in inches due to the beam only.

c. P-LOAD lists the deflection in inches due to the concentrated loads only.

d. NON-C lists the deflection in inches due to the uniform dead load (WDLnc) only.

e. TOT.NC lists the total of GIRDER, P-LOAD, and NON-C.

f. COMP. lists the deflection due to the uniform dead load input in WDLc.

3. SHEAR

a. RANGE (KIPS) lists the difference in the minimum and maximum shear envelopes (excluding dead loads). The loading condition creating the maximum positive shear is listed (T,L,M,R) under LIVE LOAD and SIDEWK. The loading condition creating the maximum negative shear is not identified. Therefore, the RANGE (KIPS) may be sidewalk combined with truck and lane, lane and military, or truck and military; depending on which loading condition results in the maximum negative shear and whether it is a different loading condition than results in the maximum positive shear.

b. CON.SPA (IN) lists the shear connector spacing for composite construction. For a rolled beam (RB) this is assigned a zero (0) value.

4. LIVE LOAD DEFLECTIONS (INCHES)

The live load deflections take into consideration impact (50/(L + 125) or 30% maximum for highway live loads and input (DFV) for railroad live loading), and the distribution factor (DFD) for deflections. If the problem is a design, the maximum live load deflection should not exceed the allowable live load deflection.

a. TRUCK lists the maximum deflection in inches at the center line of the span due to the specified (H or HS) truck loading.

b. LANE lists the maximum deflection in inches at the center line of the span due to the specified lane loading.

c. MILITARY lists the maximum deflection in inches at the center line of the span due to the military loading.

d. RAILROAD lists the deflection in inches computed by treating the maximum distributed moment, plus impact, due to the specified railroad live load at the center line of the span as the middle ordinate of a parabolic moment diagram. The beam is loaded with the resulting M/EI diagram and the center line deflection is computed by Simpson's rule for numerical integration. The results compare favorably (conservative by about 5%) with the deflection computed by using the actual M/EI diagram for the maximum moment at the centerline of a one hundred foot span.

e. SIDEWALK lists the deflection in inches at the center line of the span due to the sidewalk live load.

f. L/800 lists the allowable deflection in inches for highway live loads as the length of the span divided by eight hundred.

L/640 lists the allowable deflection in inches for railroad live loads as the length of the span divided by six hundred forty.

L/1000 lists the allowable deflection in inches when the sidewalk is loaded, as the length of the span divided by one thousand.

ROLLED BEAM

EXAMPLE PROBLEMS

There are five different approaches to using this program:

1. Analyze a given wide flange section. (See example RB-1 on page 2-23.)
2. Design a beam using L/25 to determine the minimum depth WF section to use for the first trial design. (See example RB-2 on page 2-27.)
3. Design a beam giving the preferred beam depth. (See example RB-3 on page 2-31.)
4. Design a beam giving the first trial beam. (See example RB-4 on page 2-37.)
5. Analyze a section, other than 18 through 36 wide flange beam, giving "SECTION PROPERTIES". (See example RB-5 on page 2-41.)

The following live loading conditions are explored:

1. H20 excluding military. (See example RB-1 on page 2-23.)
2. HS20 with no exclusions. (See example RB-2 on page 2-27.)
3. Sidewalk live load only (HS20 excluding truck, lane, and military). (See example RB-3 on page 2-31.)
4. HS15 with sidewalk. (See example RB-4 on page 2-37.)
5. RR80 (AREA Cooper E-80 Loading). (See example RB-5 on page 2-41.)

The allowable steel stresses are examined as indicated:

1. Type A36 steel, example RB-3 on page 2-31.)
2. Type A441 steel, examples RB-1 on page 2-23, and RB-2 on page 2-27.

3. Type 588 steel, example RB-4 on page 2-37.

4. Type 572 steel, example RB-5 on page 2-41.

Two beams designed with one input data form, example RB-3 on page 2-31.

SIMPLE SPAN

IDENTIFICATION

"CONT" TO CONTINUE REMARKS

	PROG.	PROB. NO.	PROJECT NO.	COUNTY	DATE	DESIGNER	ETC.	CONT
*	B04	RB-1	ANALYZE	24WF100	SPACED 7-0	ON CENTER	ROADWAY 28-0	CONT
*	H20	LOADING	EXCLUDE	MILITARY	USE A441	STEEL 30-0	SPAN	

SPAN DATA

	CODE TYPE	D/A	LIVE LOAD CLASS	T	L	M	SPAN LENGTH	DFM	DFV	DFD	NPL	WDLNC	WDLC	WSWK	EBEAM X 10^6	WT.BM.	ALLOW. STRESS STEEL	ALLOW. STRESS CONC.	WT.BM. MAT'L.	TYPE STEEL
1	RB	1	H20			1	30.000	1.273	1.429	8.00	3	.777	.105		29.00					441

1 = ANALYSIS (D/A) 1 = SKIP (T, L, M)
BLANK = DESIGN (D/A)

CONCENTRATED LOADS (LIMIT 40)

		X1	P1	X2	P2	X3	P3	X4	P4
2	1	0.000	1.680	1.500	2.100	3.000	1.680		
2	2								
2	3								
2	4								

CODE: TYPE
RB – ROLLED BEAM
RP – ROLLED W/PLATE
CB – COMPOSITE ROLLED
PG – PLATE GIRDER
CG – COMPOSITE GIRDER
TB – CONCRETE BEAM

STEEL BEAM DATA

	ROLLED BEAM: BEAM 1 DEPTH & WEIGHT			ROLLED BEAM: BEAM 2 DEPTH & WEIGHT			P	NP	NON-STANDARD BEAM: SECTION PROPERTIES Io IN.^4	Ytop	Ybot.	PLATE GIRDER: WEB DEPTH	WEB THICK.	TOP FLANGE WIDTH	TOP FLANGE THICK.	BOTTOM FLANGE WIDTH	BOTTOM FLANGE THICK.	CONW	CONT
3	24	WF	100		WF														

1 = CONSTANT THICKNESS (T)
WIDTH (W)

	COMPOSITE SLAB: EFFECTIVE WIDTH	THICK.	COPING	SHEAR CONN. ΣZr	SU	N ES/EC	BOTTOM COVER PLATE: X-BEG.	THICK.	WIDTH	LENGTH	TOP COVER PLATE: X-BEG.	THICK.	WIDTH	LENGTH
4														

P = 1 DESIGN WITH ℄'s
N.P. = 1 DESIGN WITHOUT ℄'s

CONCRETE BEAM DATA (T, RECT., FLAT SLAB)

"N" TEN.	"N" COM.	NO. ROWS	BEAM (WEB) IN. WIDTH	ΔW	DEPTH	ΔD	'T' SLAB WIDTH	THICK.	COMPRESSION ST. NO.	SIZE	Δ	DIST.	ROW ONE NO.	SIZE	Δ	DIST.	ROW TWO NO.	SIZE	Δ	DIST.
3																				

	ROW THREE NO.	SIZE	Δ	DIST.	ROW FOUR NO.	SIZE	Δ	DIST.	ROW FIVE NO.	SIZE	Δ	DIST.	ROW SIX NO.	SIZE	Δ	DIST.	ROW SEVEN NO.	SIZE	Δ	DIST.	ROW EIGHT NO.	SIZE	Δ	DIST.	ROW NINE NO.	SIZE	Δ	DIST.
4																												

DIMENSIONS

LENGTH – FT.
WDLNC – K/FT.
WDLC – K/FT.
WT. BM. – K/FT.
COPING – IN.
AL. STRESS – K.S.I.
WT. BM. MAT'L. – PCF
WSWK – K/FT.
Xn – FT.
Pn – KIPS.
TYPE STEEL – 572,588
DEPTH – IN.
THICK. – IN.
WEIGHT – LBS.
YTOP – IN.
ΣZr – K/ROW
X-BEG. – FT.
WIDTH – IN.
YBOT. – IN.
SU – K/EA.
SIZE – BAR SIZE (#4, #10, etc.)
Δ – INCREMENT (NO. OF BARS)
DIST. – IN.

SIMPLE SPAN INPUT DATA PROBLEM NUMBER RB-1

02/03/71 ANALYZE 24WF100 SPACED 7-0 ON CENTER ROADWAY 28-0 CONT

H 20 LOADING EXCLUDE MILITARY USE A441 STEEL 30-0 SPAN

SPAN DATA

BEAM	D/A	L.L.C.	T L M	LENGTH	D.F.M.	D.F.V.	D.F.D.	NPL
RB	1	H 20	0 0 1	30.000	1.273	1.429	0.800	3

WDLNC	WDLC	SWLL	E	W BM	FS	FC	WG	TYPE STEEL
0.777	0.105	0.0	29.00	0.0	0.0	0.0	0.0	441

CONCENTRATED LOADS

X1	P1	X2	P2	X3	P3	X4	P4
0.0	1.680	15.000	2.100	30.000	1.680	0.0	0.0

BEAM DATA

ROLLED		SECTION PROPERTIES			PLATE GIRDER WEB		TOP FLANGE		BOTTOM FLANGE	
BEAM	P NP	I	Y TOP	Y BOT	D	T	W	T	W	T
24WF100	0 0	0.0	0.0	0.0	0.0	0.0	0.0	0.0	0.0	0.0
OWF 0										

SIMPLE SPAN OUTPUT DATA PROBLEM NUMBER RB-1

BEAM PROPERTIES

BEAM	AREA	DEPTH	FL. W	FL. T	WEB T	I
24WF100	29.500	24.000	12.000	0.775	0.468	3000.0

MOMENTS (K-FT.) AT SPAN 1/20 POINTS

SP	GIRDER	P-LOAD	NON-C.	TOT.NC	COMP.	SIDEWK	LIVE LOAD	RR-I
1	2.1	1.6	16.6	20.3	2.2	0.0	42.5 T	0.0
2	4.0	3.1	31.5	38.7	4.3	0.0	80.1 T	0.0
3	5.7	4.7	44.6	55.0	6.0	0.0	112.7 T	0.0
4	7.2	6.3	55.9	69.4	7.6	0.0	140.3 T	0.0
5	8.4	7.9	65.6	81.9	8.9	0.0	163.0 T	0.0
6	9.4	9.4	73.4	92.3	9.9	0.0	180.7 T	0.0
7	10.2	11.0	79.5	100.8	10.7	0.0	193.5 T	0.0
8	10.8	12.6	83.9	107.3	11.3	0.0	201.2 T	0.0
9	11.1	14.2	86.5	111.9	11.7	0.0	204.0 T	0.0
10	11.2	15.7	87.4	114.4	11.8	0.0	201.9 T	0.0

STRESS (PSI) AT SPAN 1/20 POINTS

	MINIMUM STRESS		MAXIMUM STRESS			ALLOWABLE	R FACTOR	
SP	TOP-S	BOT-S	TOP-C	TOP-S	BOT-S	FS	TOP-S	BOT-S
1	1083	-1083	0	3124	-3124	27000	0.347	0.347
2	2060	-2060	0	5904	-5904	27000	0.349	0.349
3	2931	-2931	0	8340	-8340	27000	0.351	0.351
4	3696	-3696	0	10432	-10432	27000	0.354	0.354
5	4355	-4355	0	12179	-12179	27000	0.358	0.358
6	4907	-4907	0	13582	-13582	27000	0.361	0.361
7	5354	-5354	0	14640	-14640	27000	0.366	0.366
8	5695	-5695	0	15354	-15354	27000	0.371	0.371
9	5930	-5930	0	15724	-15724	27000	0.377	0.377
10	6058	-6058	0	15749	-15749	27000	0.385	0.385

SHEARS (KIPS) AT SPAN 1/20 POINTS

RB-1

SP	GIRDER	P-LOAD	NON-C.	TOT.NC	COMP.	SIDEWK	LIVE LOAD	RR-I
0	1.5	2.7	11.7	15.9	1.6	0.0	33.3 T	0.0
1	1.3	1.0	10.5	12.9	1.4	0.0	28.4 T	0.0
2	1.2	1.0	9.3	11.6	1.3	0.0	26.7 T	0.0
3	1.0	1.0	8.2	10.3	1.1	0.0	25.0 T	0.0
4	0.9	1.0	7.0	8.9	0.9	0.0	23.4 T	0.0
5	0.7	1.0	5.8	7.6	0.8	0.0	21.7 T	0.0
6	0.6	1.0	4.7	6.3	0.6	0.0	20.1 T	0.0
7	0.4	1.0	3.5	5.0	0.5	0.0	18.4 T	0.0
8	0.3	1.0	2.3	3.7	0.3	0.0	16.8 T	0.0
9	0.1	1.0	1.2	2.4	0.2	0.0	15.1 T	0.0
10	-0.0	1.0	-0.0	1.0	-0.0	0.0	13.5 T	0.0

	DEAD LOAD DEFLECTIONS (INCHES)					SHEAR	
SP	GIRDER	P-LOAD	NON-C.	TOT.NC	COMP.	RANGE(KIPS)	CON.SPAC(IN)
0	0.0	0.0	0.0	0.0	0.0	33.3	0.0
1	0.003	0.004	0.026	0.033	0.004	29.7	0.0
2	0.007	0.007	0.051	0.065	0.007	29.3	0.0
3	0.010	0.010	0.075	0.095	0.010	29.0	0.0
4	0.012	0.013	0.097	0.122	0.013	28.7	0.0
5	0.015	0.016	0.116	0.147	0.016	28.4	0.0
6	0.017	0.019	0.132	0.168	0.018	28.0	0.0
7	0.019	0.021	0.145	0.185	0.020	27.7	0.0
8	0.020	0.022	0.155	0.197	0.021	27.4	0.0
9	0.021	0.023	0.161	0.205	0.022	27.0	0.0
10	0.021	0.023	0.163	0.207	0.022	26.9	0.0

LIVE LOAD DEFLECTIONS (INCHES)

TRUCK	LANE	MILITARY	RAILROAD	SIDEWALK	L/ 800
0.194	0.174	0.0	0.0	0.0	0.450

SIMPLE SPAN

IDENTIFICATION

"CONT" TO CONTINUE REMARKS

PROG.	PROB. NO.	PROJECT NO.	COUNTY	DATE	DESIGNER	ETC.
* B04	RB-2	USING L/25 FOR M/M. DEPTH FIND LIGHTEST BEAM				
*						

SPAN DATA

CODE TYPE	D/A	LIVE LOAD CLASS	T	L	M	SPAN LENGTH	DFM	DFV	DFD	NPL	WDLNC	WDLC	WSWK	EBEAM X 10^6	WT.BM.	ALLOW. STRESS STEEL	ALLOW. STRESS CONC.	WT.BM. MAT'L.	TYPE STEEL
1 RB		HS20				30000	1.273	1.429	800		.777	.105		2900					441

1 = ANALYSIS (D/A) 1 = SKIP (T, L, M)
BLANK = DESIGN (D/A)

CONCENTRATED LOADS (LIMIT 40)

	X1	P1	X2	P2	X3	P3	X4	P4
2 1								
2 2								
2 3								
2 4								

CODE: TYPE
RB – ROLLED BEAM
RP – ROLLED W/PLATE
CB – COMPOSITE ROLLED
PG – PLATE GIRDER
CG – COMPOSITE GIRDER
TB – CONCRETE BEAM

STEEL BEAM DATA

ROLLED BEAM: BEAM 1 DEPTH & WEIGHT	BEAM 2 DEPTH & WEIGHT	P	NP	NON-STANDARD BEAM: SECTION PROPERTIES I_o IN.^4	YTOP	YBOT.	PLATE GIRDER: WEB DEPTH	WEB THICK.	TOP FLANGE WIDTH	TOP FLANGE THICK.	BOTTOM FLANGE WIDTH	BOTTOM FLANGE THICK.	CON. W	CON. T
3 00 WF	000 WF													

1 = CONSTANT THICKNESS (T) WIDTH (W)

COMPOSITE SLAB: EFFECTIVE WIDTH	THICK.	COPING	SHEAR CONN. ΣZ_r	SU	N ES/EC	BOTTOM COVER PLATE: X-BEG.	THICK.	WIDTH	LENGTH	TOP COVER PLATE: X-BEG.	THICK.	WIDTH	LENGTH
4													

P = 1 DESIGN WITH P's
N.P. = 1 DESIGN WITHOUT P's

CONCRETE BEAM DATA (T, RECT., FLAT SLAB)

"N" TEN.	"N" COM.	NO. ROWS	BEAM (WEB) IN. WIDTH	ΔW	DEPTH	ΔD	'T' SLAB WIDTH	THICK.	COMPRESSION ST. NO.	SIZE	Δ	DIST.	ROW ONE NO.	SIZE	Δ	DIST.	ROW TWO NO.	SIZE	Δ	DIST.
3																				

ROW THREE NO.	SIZE	Δ	DIST.	ROW FOUR NO.	SIZE	Δ	DIST.	ROW FIVE NO.	SIZE	Δ	DIST.	ROW SIX NO.	SIZE	Δ	DIST.	ROW SEVEN NO.	SIZE	Δ	DIST.	ROW EIGHT NO.	SIZE	Δ	DIST.	ROW NINE NO.	SIZE	Δ	DIST.
4																											

LENGTH – FT.
WDLNC – K/FT.
WDLC – K/FT.
WT. BM. – K/FT.

COPING – IN.
AL. STRESS – K.S.I.
WT. BM. MAT'L. – PCF
WSWK – K/FT.
X_n – FT.

DIMENSIONS
P_n – KIPS
TYPE STEEL – 572, 588
DEPTH – IN.
THICK. – IN.

WEIGHT – LBS.
YTOP – IN.
ΣZ_r – K/ROW
X-BEG. – FT.
WIDTH – IN.

YBOT. – IN.
SU – K/EA.
SIZE – BAR SIZE (#4, #10, etc.)
Δ – INCREMENT (NO. OF BARS)
DIST. – IN.

STATE HIGHWAY DEPARTMENT OF GEORGIA
BRIDGE DIVISION

10-15-70

SIMPLE SPAN INPUT DATA PROBLEM NUMBER RB-2

02/03/71 USING L/25 FOR MIN. DEPTH FIND LIGHTEST BEAM

SPAN DATA

BEAM	D/A	L.L.C.	T L M	LENGTH	D.F.M.	D.F.V.	D.F.D.	NPL
RB	0	HS20	0 0 0	30.000	1.273	1.429	0.800	0

WDLNC	WDLC	SWLL	E	W BM	FS	FC	WG	TYPE STEEL
0.777	0.105	0.0	29.00	0.0	0.0	0.0	0.0	441

BEAM DATA

ROLLED		SECTION PROPERTIES			PLATE GIRDER WEB		TOP FLANGE		BOTTOM FLANGE	
BEAM	P NP	I	Y TOP	Y BOT	D	T	W	T	W	T
OWF	0 0 0	0.0	0.0	0.0	0.0	0.0	0.0	0.0	0.0	0.0
OWF	0									

SIMPLE SPAN OUTPUT DATA PROBLEM NUMBER RB-2

BEAM PROPERTIES

BEAM	AREA	DEPTH	FL. W	FL. T	WEB T	I
24WF 76	22.400	23.910	8.985	0.682	0.440	2100.0

MOMENTS (K-FT.) AT SPAN 1/20 POINTS

SP	GIRDER	P-LOAD	NON-C.	TOT.NC	COMP.	SIDEWK	LIVE LOAD	RR-I
1	1.6	0.0	16.6	18.2	2.2	0.0	57.1 T	0.0
2	3.1	0.0	31.5	34.5	4.3	0.0	105.9 T	0.0
3	4.4	0.0	44.6	48.9	6.0	0.0	147.0 T	0.0
4	5.5	0.0	55.9	61.4	7.6	0.0	180.1 T	0.0
5	6.4	0.0	65.6	72.0	8.9	0.0	205.2 T	0.0
6	7.2	0.0	73.4	80.6	9.9	0.0	226.4 M	0.0
7	7.8	0.0	79.5	87.3	10.7	0.0	243.3 M	0.0
8	8.2	0.0	83.9	92.1	11.3	0.0	254.2 M	0.0
9	8.5	0.0	86.5	95.0	11.7	0.0	259.2 M	0.0
10	8.5	0.0	87.4	96.0	11.8	0.0	258.2 M	0.0

STRESS (PSI) AT SPAN 1/20 POINTS

	MINIMUM STRESS		MAXIMUM STRESS			ALLOWABLE	R FACTOR	
SP	TOP-S	BOT-S	TOP-C	TOP-S	BOT-S	FS	TOP-S	BOT-S
1	1398	-1398	0	5299	-5299	27000	0.264	0.264
2	2650	-2650	0	9885	-9885	27000	0.268	0.268
3	3754	-3754	0	13793	-13793	27000	0.272	0.272
4	4712	-4712	0	17012	-17012	27000	0.277	0.277
5	5521	-5521	0	19540	-19540	27000	0.283	0.283
6	6184	-6184	0	21650	-21650	27000	0.286	0.286
7	6699	-6699	0	23318	-23318	27000	0.287	0.287
8	7068	-7068	0	24432	-24432	27000	0.289	0.289
9	7288	-7288	0	24993	-24993	27000	0.292	0.292
10	7362	-7362	0	24998	-24998	27000	0.295	0.295

SHEARS (KIPS) AT SPAN 1/20 POINTS RB-2

SP	GIRDER	P-LOAD	NON-C.	TOT.NC	COMP.	SIDEWK	LIVE LOAD	RR-I
0	1.1	0.0	11.7	12.8	1.6	0.0	44.3 T	0.0
1	1.0	0.0	10.5	11.5	1.4	0.0	38.1 T	0.0
2	0.9	0.0	9.3	10.2	1.3	0.0	35.3 T	0.0
3	0.8	0.0	8.2	9.0	1.1	0.0	32.7 T	0.0
4	0.7	0.0	7.0	7.7	0.9	0.0	30.0 T	0.0
5	0.6	0.0	5.8	6.4	0.8	0.0	27.4 T	0.0
6	0.5	0.0	4.7	5.1	0.6	0.0	25.2 M	0.0
7	0.3	0.0	3.5	3.8	0.5	0.0	23.2 M	0.0
8	0.2	0.0	2.3	2.6	0.3	0.0	21.2 M	0.0
9	0.1	0.0	1.2	1.3	0.2	0.0	19.2 M	0.0
10	-0.0	0.0	-0.0	0.0	-0.0	0.0	17.2 M	0.0

	DEAD LOAD DEFLECTIONS (INCHES)					SHEAR	
SP	GIRDER	P-LOAD	NON-C.	TOT.NC	COMP.	RANGE(KIPS)	CON.SPAC(IN)
0	0.0	0.0	0.0	0.0	0.0	44.3	0.0
1	0.004	-0.0	0.037	0.041	0.005	39.4	0.0
2	0.007	-0.0	0.073	0.080	0.010	38.0	0.0
3	0.010	-0.0	0.107	0.117	0.014	36.6	0.0
4	0.014	-0.0	0.138	0.152	0.019	35.3	0.0
5	0.016	-0.0	0.166	0.182	0.022	34.6	0.0
6	0.018	-0.0	0.189	0.208	0.026	34.4	0.0
7	0.020	-0.0	0.208	0.228	0.028	34.4	0.0
8	0.022	-0.0	0.221	0.243	0.030	34.4	0.0
9	0.022	-0.0	0.230	0.252	0.031	34.4	0.0
10	0.023	-0.0	0.233	0.255	0.031	34.4	0.0

LIVE LOAD DEFLECTIONS (INCHES)

TRUCK	LANE	MILITARY	RAILROAD	SIDEWALK	L/ 800
0.384	0.249	0.387	0.0	0.0	0.450

SIMPLE SPAN

IDENTIFICATION

"CONT" TO CONTINUE REMARKS

	PROG.	PROB. NO.	PROJECT NO.	COUNTY	DATE	DESIGNER	ETC.
*	B,0,4	RB-3	FIND 30 AND 33 WF THAT WILL CARRY LOADS PEDESTRIAN BRIDGE				
*							

SPAN DATA

	CODE TYPE	D/A	LIVE LOAD CLASS	T	L	M	SPAN LENGTH	DFM	DFV	DFD	NPL	W_{DLNC}	W_{DLC}	W_{SWK}	E BEAM X 10^6	WT.BM.	ALLOW. STRESS STEEL	ALLOW. STRESS CONC.	WT.BM. MAT'L.	TYPE STEEL
1	RB		HS20	1	1	1	60.000	1.273	1.429	8.00	4	.389		.298	2900					36

1 = ANALYSIS (D/A) 1 = SKIP (T, L, M)
BLANK = DESIGN (D/A)

CONCENTRATED LOADS (LIMIT 40)

		X1	P1	X2	P2	X3	P3	X4	P4
2	1	0.000	.0560	20.000	.700	40.000	.700	60.000	.0560
2	2								
2	3								
2	4								

CODE: TYPE
RB – ROLLED BEAM
RP – ROLLED W/PLATE
CB – COMPOSITE ROLLED
PG – PLATE GIRDER
CG – COMPOSITE GIRDER
TB – CONCRETE BEAM

STEEL BEAM DATA

	ROLLED BEAM: BEAM 1 DEPTH & WEIGHT		BEAM 2 DEPTH & WEIGHT		P	NP	NON-STANDARD BEAM: SECTION PROPERTIES I_o IN.^{4}	Y TOP	Y BOT.	PLATE GIRDER: WEB DEPTH	WEB THICK.	TOP FLANGE WIDTH	TOP FLANGE THICK.	BOTTOM FLANGE WIDTH	BOTTOM FLANGE THICK.	CONT. W	CONT. T
3	30	WF	00.0	33 WF	0.00	1											

1 = CONSTANT THICKNESS (T) WIDTH (W)

	COMPOSITE SLAB: EFFECTIVE WIDTH	THICK.	COPING	SHEAR CONN. ΣZ_r	SU	N ES/EC	BOTTOM COVER PLATE: X-BEG.	THICK.	WIDTH	LENGTH	TOP COVER PLATE: X-BEG.	THICK.	WIDTH	LENGTH
4														

P = 1 DESIGN WITH ℄'s
N.P. = 1 DESIGN WITHOUT ℄'s

CONCRETE BEAM DATA (T, RECT., FLAT SLAB)

"N" TEN.	"N" COM.	NO. ROWS	BEAM (WEB) IN. WIDTH	ΔW	DEPTH	ΔD	'T' SLAB WIDTH	THICK.	COMPRESSION ST. NO.	SIZE	Δ	DIST.	ROW ONE NO.	SIZE	Δ	DIST.	ROW TWO NO.	SIZE	Δ	DIST.
3																				

ROW THREE NO.	SIZE	Δ	DIST.	ROW FOUR NO.	SIZE	Δ	DIST.	ROW FIVE NO.	SIZE	Δ	DIST.	ROW SIX NO.	SIZE	Δ	DIST.	ROW SEVEN NO.	SIZE	Δ	DIST.	ROW EIGHT NO.	SIZE	Δ	DIST.	ROW NINE NO.	SIZE	Δ	DIST.
4																											

DIMENSIONS

LENGTH – FT.
W_{DLNC} – K/FT.
W_{DLC} – K/FT.
WT. BM. – K/FT.
COPING – IN.
AL. STRESS – K.S.I.
WT. BM. MAT'L. – PCF
W_{SWK} – K/FT.
X_n – FT.
P_n – KIPS
TYPE STEEL – 572, 588
DEPTH – IN.
THICK. – IN.
WEIGHT – LBS.
Y TOP – IN.
ΣZ_r – K/ROW
X-BEG. – FT.
WIDTH – IN.
Y BOT. – IN.
SU – K/EA.
SIZE – BAR SIZE (#4, #10, etc.)
Δ – INCREMENT (NO. OF BARS)
DIST. – IN.

SIMPLE SPAN INPUT DATA PROBLEM NUMBER RB-3

02/03/71 FIND 30 AND 33 WF THAT WILL CARRY LOADS PEDESTRIAN BRIDGE

SPAN DATA

BEAM	D/A	L.L.C.	T L M	LENGTH	D.F.M.	D.F.V.	D.F.D.	NPL
RB	0	HS20	1 1 1	60.000	1.273	1.429	0.800	4

WDLNC	WDLC	SWLL	E	W BM	FS	FC	WG	TYPE STEEL
0.389	0.0	0.298	29.00	0.0	0.0	0.0	0.0	36

CONCENTRATED LOADS

X1	P1	X2	P2	X3	P3	X4	P4
0.0	0.560	20.000	0.700	40.000	0.700	60.000	0.560

BEAM DATA

ROLLED			SECTION PROPERTIES			PLATE GIRDER WEB		TOP FLANGE		BOTTOM FLANGE	
BEAM	P	NP	I	Y TOP	Y BOT	D	T	W	T	W	T
30WF	0	1 0	0.0	0.0	0.0	0.0	0.0	0.0	0.0	0.0	0.0
33WF	0										

SIMPLE SPAN OUTPUT DATA PROBLEM NUMBER RB-3

BEAM PROPERTIES

BEAM	AREA	DEPTH	FL. W	FL. T	WEB T	I
30WF108	31.800	29.820	10.484	0.760	0.548	4470.0

MOMENTS (K-FT.) AT SPAN 1/20 POINTS

SP	GIRDER	P-LOAD	NON-C.	TOT.NC	COMP.	SIDEWK	LIVE LOAD	RR-I
1	9.2	2.1	33.3	44.6	0.0	25.5	0.0 M	0.0
2	17.5	4.2	63.0	84.7	0.0	48.3	0.0 M	0.0
3	24.8	6.3	89.3	120.4	0.0	68.4	0.0 M	0.0
4	31.1	8.4	112.0	151.5	0.0	85.8	0.0 M	0.0
5	36.4	10.5	131.3	178.2	0.0	100.6	0.0 M	0.0
6	40.8	12.6	147.0	200.5	0.0	112.6	0.0 M	0.0
7	44.2	14.0	159.3	217.5	0.0	122.0	0.0 M	0.0
8	46.7	14.0	168.0	228.7	0.0	128.7	0.0 M	0.0
9	48.1	14.0	173.3	235.4	0.0	132.8	0.0 M	0.0
10	48.6	14.0	175.0	237.6	0.0	134.1	0.0 M	0.0

STRESS (PSI) AT SPAN 1/20 POINTS

	MINIMUM STRESS			MAXIMUM STRESS		ALLOWABLE	R FACTOR	
SP	TOP-S	BOT-S	TOP-C	TOP-S	BOT-S	FS	TOP-S	BOT-S
1	1784	-1784	0	2804	-2804	20000	0.636	0.636
2	3390	-3390	0	5323	-5323	20000	0.637	0.637
3	4817	-4817	0	7555	-7555	20000	0.638	0.638
4	6065	-6065	0	9500	-9500	20000	0.638	0.638
5	7134	-7134	0	11159	-11159	20000	0.639	0.639
6	8024	-8024	0	12532	-12532	20000	0.640	0.640
7	8706	-8706	0	13591	-13591	20000	0.641	0.641
8	9154	-9154	0	14307	-14307	20000	0.640	0.640
9	9422	-9422	0	14736	-14736	20000	0.639	0.639
10	9512	-9512	0	14879	-14879	20000	0.639	0.639

SHEARS (KIPS) AT SPAN 1/20 POINTS RB-3

SP	GIRDER	P-LOAD	NON-C.	TOT.NC	COMP.	SIDEWK	LIVE LOAD	RR-I
0	3.2	1.3	11.7	16.2	0.0	8.9	0.0 M	0.0
1	2.9	0.7	10.5	14.1	-0.0	8.1	0.0 M	0.0
2	2.6	0.7	9.3	12.6	-0.0	7.2	0.0 M	0.0
3	2.3	0.7	8.2	11.1	-0.0	6.5	0.0 M	0.0
4	1.9	0.7	7.0	9.6	-0.0	5.7	0.0 M	0.0
5	1.6	0.7	5.8	8.2	-0.0	5.0	0.0 M	0.0
6	1.3	0.7	4.7	6.7	-0.0	4.4	0.0 M	0.0
7	1.0	-0.0	3.5	4.5	-0.0	3.8	0.0 M	0.0
8	0.6	-0.0	2.3	3.0	-0.0	3.2	0.0 M	0.0
9	0.3	-0.0	1.2	1.5	-0.0	2.7	0.0 M	0.0
10	-0.0	-0.0	-0.0	-0.0	-0.0	2.2	0.0 M	0.0

	DEAD LOAD DEFLECTIONS (INCHES)					SHEAR	
SP	GIRDER	P-LOAD	NON-C.	TOT.NC	COMP.	RANGE(KIPS)	CON.SPAC(IN)
0	0.0	0.0	0.0	0.0	0.0	8.9	0.0
1	0.039	0.011	0.139	0.189	-0.0	8.1	0.0
2	0.076	0.022	0.275	0.373	-0.0	7.3	0.0
3	0.112	0.032	0.403	0.547	-0.0	6.7	0.0
4	0.144	0.042	0.520	0.706	-0.0	6.1	0.0
5	0.173	0.051	0.623	0.847	-0.0	5.6	0.0
6	0.198	0.058	0.712	0.967	-0.0	5.2	0.0
7	0.217	0.064	0.782	1.063	-0.0	4.9	0.0
8	0.231	0.068	0.833	1.133	-0.0	4.6	0.0
9	0.240	0.071	0.865	1.175	-0.0	4.5	0.0
10	0.243	0.072	0.875	1.190	-0.0	4.5	0.0

LIVE LOAD DEFLECTIONS (INCHES)

TRUCK	LANE	MILITARY	RAILROAD	SIDEWALK	L/1000
0.0	0.0	0.0	0.0	0.670	0.720

SIMPLE SPAN OUTPUT DATA PROBLEM NUMBER RB-3

BEAM PROPERTIES

BEAM	AREA	DEPTH	FL. W	FL. T	WEB T	I
33WF118	34.800	32.860	11.484	0.738	0.554	5900.0

MOMENTS (K-FT.) AT SPAN 1/20 POINTS

SP	GIRDER	P-LOAD	NON-C.	TOT.NC	COMP.	SIDEWK	LIVE LOAD	RR-I
1	10.1	2.1	33.3	45.4	0.0	25.5	0.0 M	0.0
2	19.1	4.2	63.0	86.3	0.0	48.3	0.0 M	0.0
3	27.1	6.3	89.3	122.7	0.0	68.4	0.0 M	0.0
4	34.0	8.4	112.0	154.4	0.0	85.8	0.0 M	0.0
5	39.8	10.5	131.3	181.6	0.0	100.6	0.0 M	0.0
6	44.6	12.6	147.0	204.2	0.0	112.6	0.0 M	0.0
7	48.3	14.0	159.3	221.6	0.0	122.0	0.0 M	0.0
8	51.0	14.0	168.0	233.0	0.0	128.7	0.0 M	0.0
9	52.6	14.0	173.3	239.9	0.0	132.8	0.0 M	0.0
10	53.1	14.0	175.0	242.1	0.0	134.1	0.0 M	0.0

STRESS (PSI) AT SPAN 1/20 POINTS

	MINIMUM STRESS			MAXIMUM STRESS		ALLOWABLE	R FACTOR	
SP	TOP-S	BOT-S	TOP-C	TOP-S	BOT-S	FS	TOP-S	BOT-S
1	1518	-1518	0	2370	-2370	20000	0.641	0.641
2	2885	-2885	0	4498	-4498	20000	0.641	0.641
3	4098	-4098	0	6384	-6384	20000	0.642	0.642
4	5160	-5160	0	8028	-8028	20000	0.643	0.643
5	6068	-6068	0	9429	-9429	20000	0.644	0.644
6	6825	-6825	0	10589	-10589	20000	0.645	0.645
7	7405	-7405	0	11483	-11483	20000	0.645	0.645
8	7786	-7786	0	12088	-12088	20000	0.644	0.644
9	8015	-8015	0	12452	-12452	20000	0.644	0.644
10	8091	-8091	0	12573	-12573	20000	0.644	0.644

SHEARS (KIPS) AT SPAN 1/20 POINTS RB-3

SP	GIRDER	P-LOAD	NON-C.	TOT.NC	COMP.	SIDEWK	LIVE LOAD	RR-I
0	3.5	1.3	11.7	16.5	0.0	8.9	0.0 M	0.0
1	3.2	0.7	10.5	14.4	-0.0	8.1	0.0 M	0.0
2	2.8	0.7	9.3	12.9	-0.0	7.2	0.0 M	0.0
3	2.5	0.7	8.2	11.3	-0.0	6.5	0.0 M	0.0
4	2.1	0.7	7.0	9.8	-0.0	5.7	0.0 M	0.0
5	1.8	0.7	5.8	8.3	-0.0	5.0	0.0 M	0.0
6	1.4	0.7	4.7	6.8	-0.0	4.4	0.0 M	0.0
7	1.1	-0.0	3.5	4.6	-0.0	3.8	0.0 M	0.0
8	0.7	-0.0	2.3	3.0	-0.0	3.2	0.0 M	0.0
9	0.4	-0.0	1.2	1.5	-0.0	2.7	0.0 M	0.0
10	-0.0	-0.0	-0.0	-0.0	-0.0	2.2	0.0 M	0.0

	DEAD LOAD DEFLECTIONS (INCHES)					SHEAR	
SP	GIRDER	P-LOAD	NON-C.	TOT.NC	COMP.	RANGE(KIPS)	CON.SPAC(IN)
0	0.0	0.0	0.0	0.0	0.0	8.9	0.0
1	0.032	0.008	0.106	0.146	-0.0	8.1	0.0
2	0.063	0.017	0.208	0.288	-0.0	7.3	0.0
3	0.093	0.025	0.305	0.422	-0.0	6.7	0.0
4	0.119	0.032	0.394	0.545	-0.0	6.1	0.0
5	0.143	0.038	0.472	0.654	-0.0	5.6	0.0
6	0.164	0.044	0.539	0.747	-0.0	5.2	0.0
7	0.180	0.048	0.592	0.821	-0.0	4.9	0.0
8	0.192	0.052	0.631	0.875	-0.0	4.6	0.0
9	0.199	0.054	0.655	0.907	-0.0	4.5	0.0
10	0.201	0.054	0.663	0.918	-0.0	4.5	0.0

LIVE LOAD DEFLECTIONS (INCHES)

TRUCK	LANE	MILITARY	RAILROAD	SIDEWALK	L/1000
0.0	0.0	0.0	0.0	0.508	0.720

SIMPLE SPAN

IDENTIFICATION

"CONT" TO CONTINUE REMARKS

PROG.	PROB. NO.	PROJECT NO.	COUNTY	DATE	DESIGNER	ETC.
* B04	RB-4	USING 24WF100 AS FIRST TRIAL BEAM FIND LIGHTEST IN TABLE				
*						

SPAN DATA

CODE TYPE	D/A	LIVE LOAD CLASS	T	L	M	SPAN LENGTH	DFM	DFV	DFD	NPL	WDLNC	WDLC	WSWK	EBEAM X 10^6	WT.BM.	ALLOW. STRESS STEEL	ALLOW. STRESS CONC.	WT.BM. MAT'L.	TYPE STEEL
1 RB		HS15				30.000	1.273	1.429	0.800	3	.777	.105	.238	29.00					588

1 = ANALYSIS (D/A) 1 = SKIP (T, L, M)
BLANK = DESIGN (D/A)

CONCENTRATED LOADS (LIMIT 40)

	X1	P1	X2	P2	X3	P3	X4	P4
2 1	0.000	1.680	15.000	21.00	30.000	1.680		
2 2								
2 3								
2 4								

CODE: TYPE
RB – ROLLED BEAM
RP – ROLLED W/PLATE
CB – COMPOSITE ROLLED
PG – PLATE GIRDER
CG – COMPOSITE GIRDER
TB – CONCRETE BEAM

STEEL BEAM DATA

ROLLED BEAM: BEAM 1 DEPTH & WEIGHT	BEAM 2 DEPTH & WEIGHT	P	NP	NON-STANDARD BEAM: SECTION PROPERTIES I_o IN.^{4}	YTOP	YBOT.	PLATE GIRDER: WEB DEPTH	WEB THICK.	TOP FLANGE WIDTH	TOP FLANGE THICK.	BOTTOM FLANGE WIDTH	BOTTOM FLANGE THICK.	CON. W	CON. T
3 24 WF 100	WF													

1 = CONSTANT THICKNESS (T) WIDTH (W)

COMPOSITE SLAB: EFFECTIVE WIDTH	THICK.	COPING	SHEAR CONN. ΣZr	SU	N ES/EC	BOTTOM COVER PLATE: X-BEG.	THICK.	WIDTH	LENGTH	TOP COVER PLATE: X-BEG.	THICK.	WIDTH	LENGTH
4													

P = 1 DESIGN WITH PL's
N.P. = 1 DESIGN WITHOUT PL's

CONCRETE BEAM DATA (T, RECT., FLAT SLAB)

"N" TEN.	COM.	NO. ROWS	BEAM (WEB) IN. WIDTH	ΔW	DEPTH	ΔD	'T' SLAB WIDTH	THICK.	COMPRESSION ST. NO.	SIZE	Δ	DIST.	ROW ONE NO.	SIZE	Δ	DIST.	ROW TWO NO.	SIZE	Δ	DIST.
3																				

ROW THREE NO.	SIZE	Δ	DIST.	ROW FOUR NO.	SIZE	Δ	DIST.	ROW FIVE NO.	SIZE	Δ	DIST.	ROW SIX NO.	SIZE	Δ	DIST.	ROW SEVEN NO.	SIZE	Δ	DIST.	ROW EIGHT NO.	SIZE	Δ	DIST.	ROW NINE NO.	SIZE	Δ	DIST.
4																											

DIMENSIONS

LENGTH – FT.
WDLNC – K/FT.
WDLC – K/FT.
WT. BM. – K/FT.
COPING – IN.
AL. STRESS – K.S.I.
WT. BM. MAT'L. – PCF
WSWK – K/FT.
X_n – FT.
P_n – KIPS.
TYPE STEEL – 572, 588
DEPTH – IN.
THICK. – IN.
WEIGHT – LBS.
YTOP – IN.
ΣZr – K/ROW
X-BEG. – FT.
WIDTH – IN.
YBOT. – IN.
SU – K/EA.
SIZE – BAR SIZE (#4, #10, etc.)
Δ – INCREMENT (NO. OF BARS)
DIST. – IN.

STATE HIGHWAY DEPARTMENT OF GEORGIA
BRIDGE DIVISION
10-15-70

SIMPLE SPAN INPUT DATA PROBLEM NUMBER RB-4

02/03/71 USING 24WF100 AS FIRST TRIAL BEAM FIND LIGHTEST IN TABLE

SPAN DATA

BEAM	D/A	L.L.C.	T L M	LENGTH	D.F.M.	D.F.V.	D.F.D.	NPL
RB	0	HS15	0 0 0	30.000	1.273	1.429	0.800	3

WDLNC	WDLC	SWLL	E	W BM	FS	FC	WG	TYPE STEEL
0.777	0.105	0.238	29.00	0.0	0.0	0.0	0.0	588

CONCENTRATED LOADS

X1	P1	X2	P2	X3	P3	X4	P4
0.0	1.680	15.000	2.100	30.000	1.680	0.0	0.0

BEAM DATA

ROLLED			SECTION PROPERTIES			PLATE GIRDER WEB		TOP FLANGE		BOTTOM FLANGE	
BEAM	P	NP	I	Y TOP	Y BOT	D	T	W	T	W	T
24WF100	0	0	0.0	0.0	0.0	0.0	0.0	0.0	0.0	0.0	0.0
OWF	0										

SIMPLE SPAN OUTPUT DATA PROBLEM NUMBER RB-4

BEAM PROPERTIES

BEAM	AREA	DEPTH	FL. W	FL. T	WEB T	I
27WF 84	24.800	26.690	9.963	0.636	0.463	2830.0

MOMENTS (K-FT.) AT SPAN 1/20 POINTS

SP	GIRDER	P-LOAD	NON-C.	TOT.NC	COMP.	SIDEWK	LIVE LOAD	RR-I
1	1.8	1.6	16.6	20.0	2.2	5.1	52.6 M	0.0
2	3.4	3.1	31.5	38.0	4.3	9.6	99.3 M	0.0
3	4.8	4.7	44.6	54.1	6.0	13.7	140.0 M	0.0
4	6.0	6.3	55.9	68.3	7.6	17.1	174.8 M	0.0
5	7.1	7.9	65.6	80.5	8.9	20.1	203.6 M	0.0
6	7.9	9.4	73.4	90.8	9.9	22.5	226.4 M	0.0
7	8.6	11.0	79.5	99.2	10.7	24.4	243.3 M	0.0
8	9.1	12.6	83.9	105.6	11.3	25.7	254.2 M	0.0
9	9.4	14.2	86.5	110.1	11.7	26.5	259.2 M	0.0
10	9.4	15.7	87.4	112.6	11.8	26.8	258.2 M	0.0

STRESS (PSI) AT SPAN 1/20 POINTS

	MINIMUM STRESS		MAXIMUM STRESS			ALLOWABLE	R FACTOR	
SP	TOP-S	BOT-S	TOP-C	TOP-S	BOT-S	FS	TOP-S	BOT-S
1	1257	-1257	0	4523	-4523	27000	0.278	0.278
2	2392	-2392	0	8556	-8556	27000	0.280	0.280
3	3403	-3403	0	12098	-12098	27000	0.281	0.281
4	4292	-4292	0	15150	-15150	27000	0.283	0.283
5	5057	-5057	0	17712	-17712	27000	0.286	0.286
6	5700	-5700	0	19783	-19783	27000	0.288	0.288
7	6219	-6219	0	21364	-21364	27000	0.291	0.291
8	6616	-6616	0	22454	-22454	27000	0.295	0.295
9	6890	-6890	0	23054	-23054	27000	0.299	0.299
10	7040	-7040	0	23164	-23164	27000	0.304	0.304

SHEARS (KIPS) AT SPAN 1/20 POINTS

SP	GIRDER	P-LOAD	NON-C.	TOT.NC	COMP.	SIDEWK	LIVE LOAD	RR-1
0	1.3	2.7	11.7	15.6	1.6	3.6	39.5 M	0.0
1	1.1	1.0	10.5	12.7	1.4	3.2	35.1 M	0.0
2	1.0	1.0	9.3	11.4	1.3	2.9	33.1 M	0.0
3	0.9	1.0	8.2	10.1	1.1	2.6	31.1 M	0.0
4	0.8	1.0	7.0	8.8	0.9	2.3	29.1 M	0.0
5	0.6	1.0	5.8	7.5	0.8	2.0	27.1 M	0.0
6	0.5	1.0	4.7	6.2	0.6	1.7	25.2 M	0.0
7	0.4	1.0	3.5	4.9	0.5	1.5	23.2 M	0.0
8	0.3	1.0	2.3	3.6	0.3	1.3	21.2 M	0.0
9	0.1	1.0	1.2	2.3	0.2	1.1	19.2 M	0.0
10	-0.0	1.0	-0.0	1.0	-0.0	0.9	17.2 M	0.0

DEAD LOAD DEFLECTIONS (INCHES)

SP	GIRDER	P-LOAD	NON-C.	TOT.NC	COMP.	SHEAR RANGE(KIPS)	CON.SPAC(IN)
0	0.0	0.0	0.0	0.0	0.0	43.1	0.0
1	0.003	0.004	0.027	0.034	0.004	39.3	0.0
2	0.006	0.007	0.054	0.067	0.007	38.0	0.0
3	0.009	0.011	0.079	0.099	0.011	37.1	0.0
4	0.011	0.014	0.102	0.128	0.014	36.8	0.0
5	0.013	0.017	0.123	0.153	0.017	36.7	0.0
6	0.015	0.020	0.140	0.175	0.019	36.5	0.0
7	0.017	0.022	0.154	0.193	0.021	36.4	0.0
8	0.018	0.023	0.164	0.206	0.022	36.3	0.0
9	0.018	0.025	0.170	0.213	0.023	36.2	0.0
10	0.019	0.025	0.173	0.216	0.023	36.2	0.0

LIVE LOAD DEFLECTIONS (INCHES)

TRUCK	LANE	MILITARY	RAILROAD	SIDEWALK	L/1000
0.214	0.139	0.287	0.0	0.053	0.360

SIMPLE SPAN

10-15-70

STATE HIGHWAY DEPARTMENT OF GEORGIA
BRIDGE DIVISION

IDENTIFICATION

"CONT" TO CONTINUE REMARKS

	PROG.	PROB. NO.	PROJECT NO.	COUNTY	DATE	DESIGNER	ETC.	
*	B,0,4	RB-5	ANALYZE NON-STANDARD SECTION WITH RAILROAD COOPER E-80					CONT
*	LOADING ON A 70 FOOT SPAN							

SPAN DATA

	CODE TYPE	D/A	LIVE LOAD CLASS	T	L	M	SPAN LENGTH	DFM	DFV	DFD	NPL	WDLNC	WDLC	WSWK	EBEAM X 10^6	WT.BM.	ALLOW. STRESS STEEL	ALLOW. STRESS CONC.	WT.BM. MAT'L.	TYPE STEEL
1	RB	1	RR80				70.000	3.000	.477	3.000	6	1.543			29.00		23.0			572

1 = ANALYSIS (D/A) 1 = SKIP (T, L, M)
BLANK = DESIGN (D/A)

CONCENTRATED LOADS (LIMIT 40)

		X1	P1	X2	P2	X3	P3	X4	P4
2	1	5.000	1.090	17.000	1.090	29.000	1.090	41.000	1.090
2	2	53.000	1.090	65.000	1.090				
2	3								
2	4								

CODE: TYPE
RB – ROLLED BEAM
RP – ROLLED W/PLATE
CB – COMPOSITE ROLLED
PG – PLATE GIRDER
CG – COMPOSITE GIRDER
TB – CONCRETE BEAM

STEEL BEAM DATA

1 = CONSTANT THICKNESS (T) WIDTH (W)

	ROLLED BEAM: BEAM 1 DEPTH & WEIGHT	BEAM 2 DEPTH & WEIGHT	P	NP	NON-STANDARD BEAM: SECTION PROPERTIES Io IN.^4	YTOP	YBOT.	PLATE GIRDER: WEB DEPTH	WEB THICK.	TOP FLANGE WIDTH	TOP FLANGE THICK.	BOTTOM FLANGE WIDTH	BOTTOM FLANGE THICK.	CONW	CONT
3	WF	WF			315342.0	31.329	32.671								

	COMPOSITE SLAB: EFFECTIVE WIDTH	THICK.	COPING	SHEAR CONN. ΣZr	SU	N ES/EC	BOTTOM COVER PLATE: X-BEG.	THICK.	WIDTH	LENGTH	TOP COVER PLATE: X-BEG.	THICK.	WIDTH	LENGTH
4														

P = 1 DESIGN WITH ℄'s
N.P. = 1 DESIGN WITHOUT ℄'s

CONCRETE BEAM DATA (T, RECT., FLAT SLAB)

	"N" TEN.	"N" COM.	NO. ROWS	BEAM (WEB) IN. WIDTH	ΔW	DEPTH	ΔD	'T' SLAB WIDTH	THICK.	COMPRESSION ST. NO.	SIZE	Δ	DIST.	ROW ONE NO.	SIZE	Δ	DIST.	ROW TWO NO.	SIZE	Δ	DIST.
3																					

	ROW THREE NO.	SIZE	Δ	DIST.	ROW FOUR NO.	SIZE	Δ	DIST.	ROW FIVE NO.	SIZE	Δ	DIST.	ROW SIX NO.	SIZE	Δ	DIST.	ROW SEVEN NO.	SIZE	Δ	DIST.	ROW EIGHT NO.	SIZE	Δ	DIST.	ROW NINE NO.	SIZE	Δ	DIST.
4																												

DIMENSIONS

LENGTH – FT.
WDLNC – K/FT.
WDLC – K/FT.
WT. BM. – K/FT.
COPING – IN.
AL. STRESS – K.S.I.
WT. BM. MAT'L. – PCF
WSWK – K/FT.
Xn – FT.
Pn – KIPS
TYPE STEEL – 572, 588
DEPTH – IN.
THICK. – IN.
WEIGHT – LBS.
YTOP – IN.
ΣZr – K/ROW
X-BEG. – FT.
WIDTH – IN.
YBOT. – IN.
SU – K/EA.
SIZE – BAR SIZE (#4, #10, etc.)
Δ – INCREMENT (NO. OF BARS)
DIST. – IN.

SIMPLE SPAN INPUT DATA PROBLEM NUMBER RB-5

02/03/71 ANALYZE NON-STANDARD SECTION WITH RAILROAD COOPER E-80 CONT

LOADING ON A 70 FOOT SPAN

SPAN DATA

BEAM	D/A	L.L.C.	T L M	LENGTH	D.F.M.	D.F.V.	D.F.D.	NPL
RB	1	RR80	0 0 0	70.000	3.000	0.477	3.000	6

WDLNC	WDLC	SWLL	E	W BM	FS	FC	WG	TYPE STEEL
1.543	0.0	0.0	29.00	0.0	23.00	0.0	0.0	572

CONCENTRATED LOADS

X1	P1	X2	P2	X3	P3	X4	P4
5.000	1.090	17.000	1.090	29.000	1.090	41.000	1.090
53.000	1.090	65.000	1.090	0.0	0.0	0.0	0.0

BEAM DATA

ROLLED				SECTION PROPERTIES			PLATE GIRDER WEB		TOP FLANGE		BOTTOM FLANGE	
BEAM	P	NP		I	Y TOP	Y BOT	D	T	W	T	W	T
OWF	0	0	0	315342.0	31.329	32.671	0.0	0.0	0.0	0.0	0.0	0.0
OWF	0											

SIMPLE SPAN OUTPUT DATA PROBLEM NUMBER RB-5

MOMENTS (K-FT.) AT SPAN 1/20 POINTS

SP	GIRDER	P-LOAD	NON-C.	TOT.NC	COMP.	SIDEWK	LIVE LOAD	RR-1
1	-0.0	11.4	179.6	191.0	0.0	0.0	2108.7 R	1005.8
2	-0.0	20.7	340.2	360.9	0.0	0.0	3829.2 R	1826.5
3	-0.0	28.3	482.0	510.3	0.0	0.0	5389.5 R	2570.8
4	-0.0	36.0	604.9	640.8	0.0	0.0	6700.8 R	3196.3
5	-0.0	43.1	708.8	751.9	0.0	0.0	7825.9 R	3732.9
6	-0.0	46.9	793.9	840.7	0.0	0.0	8637.0 R	4119.8
7	-0.0	50.7	860.0	910.7	0.0	0.0	9333.6 R	4452.1
8	-0.0	54.5	907.3	961.8	0.0	0.0	9826.8 R	4687.4
9	-0.0	55.6	935.6	991.2	0.0	0.0	10114.3 R	4824.5
10	-0.0	55.6	945.1	1000.7	0.0	0.0	10245.0 R	4886.8

STRESS (PSI) AT SPAN 1/20 POINTS

	MINIMUM STRESS		MAXIMUM STRESS			ALLOWABLE	R FACTOR	
SP	TOP-S	BOT-S	TOP-C	TOP-S	BOT-S	FS	TOP-S	BOT-S
1	227	-237	0	3940	-4109	23000	0.058	0.058
2	430	-448	0	7173	-7480	23000	0.060	0.060
3	608	-634	0	10098	-10531	23000	0.060	0.060
4	763	-796	0	12563	-13101	23000	0.061	0.061
5	896	-934	0	14676	-15305	23000	0.061	0.061
6	1002	-1045	0	16210	-16905	23000	0.062	0.062
7	1085	-1132	0	17521	-18271	23000	0.062	0.062
8	1146	-1195	0	18450	-19240	23000	0.062	0.062
9	1181	-1232	0	18991	-19805	23000	0.062	0.062
10	1192	-1244	0	19233	-20056	23000	0.062	0.062

SHEARS (KIPS) AT SPAN 1/20 POINTS

RB-5

SP	GIRDER	P-LOAD	NON-C.	TOT.NC	COMP.	SIDEWK	LIVE LOAD	RR-I
0	0.0	3.3	54.0	57.3	0.0	0.0	663.1 R	316.3
1	-0.0	3.3	48.6	51.9	-0.0	0.0	602.5 R	287.4
2	-0.0	2.2	43.2	45.4	-0.0	0.0	547.0 R	260.9
3	-0.0	2.2	37.8	40.0	-0.0	0.0	495.0 R	236.1
4	-0.0	2.2	32.4	34.6	-0.0	0.0	444.8 R	212.2
5	-0.0	1.1	27.0	28.1	-0.0	0.0	395.7 R	188.7
6	-0.0	1.1	21.6	22.7	-0.0	0.0	350.1 R	167.0
7	-0.0	1.1	16.2	17.3	-0.0	0.0	306.6 R	146.2
8	-0.0	1.1	10.8	11.9	-0.0	0.0	264.0 R	125.9
9	-0.0	-0.0	5.4	5.4	-0.0	0.0	223.1 R	106.4
10	-0.0	-0.0	-0.0	-0.0	-0.0	0.0	184.4 R	87.9

DEAD LOAD DEFLECTIONS (INCHES)

SP	GIRDER	P-LOAD	NON-C.	TOT.NC	COMP.	SHEAR RANGE(KIPS)	CON.SPAC(IN)
0	0.0	0.0	0.0	0.0	0.0	663.1	0.0
1	-0.0	0.001	0.015	0.015	-0.0	602.5	0.0
2	-0.0	0.002	0.029	0.030	-0.0	547.0	0.0
3	-0.0	0.002	0.042	0.044	-0.0	495.0	0.0
4	-0.0	0.003	0.054	0.057	-0.0	444.8	0.0
5	-0.0	0.004	0.065	0.069	-0.0	395.7	0.0
6	-0.0	0.004	0.074	0.079	-0.0	350.1	0.0
7	-0.0	0.005	0.081	0.086	-0.0	306.6	0.0
8	-0.0	0.005	0.087	0.092	-0.0	264.0	0.0
9	-0.0	0.005	0.090	0.095	-0.0	223.1	0.0
10	-0.0	0.005	0.091	0.097	-0.0	184.4	0.0

LIVE LOAD DEFLECTIONS (INCHES)

TRUCK	LANE	MILITARY	RAILROAD	SIDEWALK	L/ 640
0.0	0.0	0.0	1.459	0.0	1.312

III. ROLLED BEAM WITH COVER PLATES (RP)

A Rolled beam with Cover Plates is any standard 18 through 36 inch depth wide flange section with cover plates top and/or bottom. All Rolled beams with Plates spans are non-composite. Section properties (area, depth, flange width and thickness, web thickness, and moment of inertia) of all 18, 21, 24, 27, 30, 33, and 36 inch depth wide flange sections are available in the program. Refer to the input data form in the following discussion of the input data.

INPUT DATA

A. IDENTIFICATION (* in c.c. 1).

The IDENTIFICATION lines are used to supply any pertinent information about the bridge that the Engineer wishes to head the output listing. The project number, county, date, and the designer's name or initials should always be given. Card columns 2-4 of the first line are reserved for the program number.

Card columns 5-8 of the first line are reserved for the problem number. This space is always left blank by the Engineer since the problem number is assigned from the log book of the Bridge Division computer problems. The problem number is associated with any error messages and appears on the output listing.

Any number of IDENTIFICATION lines may be used to enter remarks, etc. Whenever more than one line (card) is used, the code "CONT" must be entered in card columns 65-68 of all lines (cards), except the last line, to indicate to the program that another IDENTIFICATION card will follow. If only one line (card) of IDENTIFICATION is used, "CONT" is not required.

B. SPAN DATA (1 in c.c. 1).

The SPAN DATA card gives information relating to the span, generally without regard to the type of beam under consideration. The digit one (1) in card column one is used for identification and is of no significance to the Engineer.

1. CODE (c.c. 2-4) Form: RPX

   a. TYPE (c.c. 2,3) Form: RP

      Enter the TYPE of beam in card columns 2, 3. "RP" defines a Rolled beam with Cover Plates. The rolled beam must be a standard 18, 21, 24, 27, 30, 33, or 36 inch depth wide flange section.

   b. D/A (c.c. 4) Form: X (blank or 1).

      The digit one (1) indicates that a given section is to be analyzed, and a blank (or zero) indicates that the beam is to be designed (determined). Any other character is illegal.

2. LIVE LOAD (c.c. 5-11). This input data defines the class of live load and the various loads that are to be omitted.

   a. CLASS (c.c. 5-8)

      The LIVE LOAD CLASS is entered in card columns 5-8, i.e., HS20, H 15, RR80, etc. Following are the live loads considered by the program.

      HS20* (AASHO designation HS20-44)

      HS15 (AASHO designation HS15-44)

      H 20 (AASHO designation H20-44)

      H 15 (AASHO designation H15-44)

      H 10 (AASHO designation H10-44)

      (*These numbers can be increased or decreased by any amount to check the overstress provisions of the AASHO Specifications)

The program uses 80% of the input value for the largest wheel load. Uniform lane load and concentrated lane loads are proportioned accordingly. Moments are computed with the wheel loads adjusted by impact and the distribution factor for moments (DFM). For the end reaction, the wheel at the support is adjusted by the impact factor and the distribution factor for shear (DFV). Intermediate shear values are computed with the wheel loads adjusted by the impact factor for the loaded span and the distribution factor for moments. Deflections are a function of the wheel loads adjusted by the impact factor and the distribution factor for deflections (DFD).

Railroad live loads:

RR80 (AREA Cooper E 80 load).

RR72 (AREA Cooper E 72 load).

RR** (AREA Cooper E ** load).

The program computes the moments, shears, and approximates the deflection for one rail adjusted by impact and distribution factors using one-half of the input value (80, 72, etc.) as the largest wheel load.

b. T (c.c. 9) Form: X (blank or 1).

The truck live load can be eliminated from consideration by entering the digit one (1) in card column 9 when using a standard highway loading. Leave blank if truck loading is to be considered.

c. L (c.c. 10) Form: X (blank or 1).

The lane live load can be eliminated from consideration by entering

the digit one (1) in card column 10 when using a standard highway loading. Leave blank if lane loading is to be considered.

d. M (c.c. 11) Form: X (blank or 1).

The military live load can be eliminated from consideration by entering the digit one (1) in card column 11 when using a standard highway loading. Leave blank if military loading is to be considered.

Sidewalk live load only can be achieved by placing 111 in T, L, M (c.c. 9, 10, 11) with a standard highway load. This eliminates the truck, lane, and military from consideration leaving the sidewalk load as the only live load when computing moments, stresses, shears and deflections.

The omission of truck, lane, and military live load has no meaning when railroad live load is designated.

3. LENGTH (c.c. 12-17) Form: XXX.XXX feet.

LENGTH is the design span length in feet from center line of bearing to center line of bearing.

4. DFM (c.c. 18-21) Form: X.XXX ratio.

DFM, the distribution factor for moments, is the proportion of one row of wheels for highway and railroad loadings acting on the beam for moment and intermediate shear. This factor must always be greater than zero.

5. DFV (c.c. 22-25) Form: X.XXX ratio.

DFV, the distribution factor for end shear, is the proportion of one

wheel on the beam at the end support for highway live load. When railroad live load is indicated, DFV is the amount the loads are increased for impact.

6. DFD (c.c. 26-29) Form: X.XXX ratio.

DFD, the distribution factor for deflections, is the proportion of one row of wheels for highway and railroad live loadings acting on the beam for calculating live load deflections. DFD is completely independent of DFM or DFV.

7. NPL (c.c. 30, 31) Form: XX (1-40).

NPL is the number of concentrated loads in the span.

A maximum of forty is available.

8. WDLnc (c.c. 32-35) Form: X.XXX kips per foot.

WDLnc is the weight of the uniform dead load (slab, coping, curb, handrail, utilities, etc.) in kips per foot. The weight of the beam should not be included if the beam is a standard WF shape, i.e., the weight of the beam is stored in the program.

9. WDLc (c.c. 36-39) Form: X.XXX kips per foot.

WDLc is used to separate dead loads when necessary, i.e., the weight of future paving or future construction. The value placed in WDLc is used to compute total stresses but the moments, shears, and deflections will not be added to the total moments, shears, and deflections.

10. WSWK (c.c. 40-43) Form: X.XXX kips per foot.

WSWK is the uniform sidewalk live load in kips per foot. The deflection resulting from this load is added to the highway (H, HS) or railroad

(RR) live load deflection when checking to see if the allowable live load deflection (L/1000) is exceeded. It is assumed that the maximum sidewalk deflection and the maximum highway or railroad deflection would be coincidental.

11. E BEAM X 10^6 (c.c. 44-47) Form: XX.XX mpsi.

This is the Modulus of Elasticity of the beam material in million pounds per square inch, and is used in computing deflections. If a value of E equal to zero (0) is entered or this data field is left blank, the program will by-pass all computations for deflections.

12. WT.BM. (c.c. 48-51) Form: X.XXX kips per foot.

This is the uniform weight of the non-standard beam specified in "SECTION PROPERTIES," and is not used with WF Rolled beam with Plates. If a non-standard beam is analyzed (section properties are given), the beam weight should be given here or included in WDLnc.

13. ALLOWABLE STRESS (c.c. 52-59)

a. STEEL (c.c. 52-55) Form: XX.XX ksi.

STEEL is the allowable stress in ksi in the beam to determine which grade of A572 to consider, or the ALLOWABLE STRESS for other grades or metals. If this is left blank TYPE STEEL will govern the allowable stress. The allowable steel stress is not required for A36, A441, or A588 types of steel.

b. CONC (c.c. 56-59) Form: X.XXX ksi.

This is the allowable stress in ksi in the concrete. Therefore, this data is not required with a Rolled beam with Plates (RP) span.

14. WT.BM.MAT'L (c.c. 60-62) Form: XXX pounds per cu. ft.

This is the weight of the beam material in pounds per cubic foot. This data is required for the Rolled beam with Plates (RP) span if the plates weigh other than 490 pounds per cubic foot.

15. TYPE STEEL (c.c. 63-65) Form: XXX (36, 441, etc.)

The program has provisions to use A36 (enter 36), A441 (enter 441), A588 (enter 588), A572 (enter 572), or A514 (enter 514). When type A572 is used, the ALLOW. STRESS (STEEL card columns 52-55) must be given to show which grade is to be considered. If STEEL (c.c. 52-55) and TYPE STEEL (c.c. 63-65) are both blank, type A36 steel allowable stresses are used.

C. CONCENTRATED LOADS (2 in c.c. 1)

Card columns one and two are used to keep the cards in sequence and contain 21, 22, 25, etc. to 30. The input data form shows two cards (the program has provisions for ten). When necessary, write between the lines or attach extra forms to provide space for the required CONCENTRATED LOADS.

1. Xn (c.c. 3-8, 15-20, 27-32, 39-44) Form: XXX.XXX feet.

Xn is the distance in feet from the left support to the concentrated load (diaphragm, handrail post, utility pole, sign, etc.)Pn. The maximum number of loads is forty. The distance may or may not be of increasing magnitude from the left support.

2. Pn (c.c. 9-14, 21-26, 33-38, 45-50) Form: XXX.XXX kips.

Pn is the concentrated load in kips.

D. STEEL BEAM DATA (3 in c.c. 1)

1. ROLLED BEAM (c.c. 2-17) BEAM 1 & 2 Form: XXWFXXX & XXWFXXX

This data must be given for a WF analysis (D/A=1) problem. These

fields (DEPTH, WEIGHT) determine the option used for a design (D/A=0) problem. All design options use the following procedure to determine the size of the necessary plates. The dimension in "BOTTOM COVER PLATE" ("WIDTH" card columns 36-39, card number 4) is checked to see if the Engineer has set the maximum plate width. When this "WIDTH" is zero (blank) the program computes a narrow plate with a width equal to the flange width minus 1½" (±). This narrow plate is incremented from 5/16" in thickness in 1/16" increments until a workable solution is found or 1½ times the flange thickness is exceeded. When a workable solution is not found, the plate width is increased to at least 3" wider than the flange width. This wide plate is then incremented from 5/16" in 1/16" increments until a workable solution is found or 1½ times the flange thickness is exceeded. When a workable solution is not found, the next heavier beam in the same series or the lightest beam of the next deeper series is tried and the incremental process is repeated. The minimum plate thickness allowed is 5/16". When a workable solution is found with a plate that has a thickness less than 5/16", the plate width is decremented in ½" decrements until the thickness is incremented to 5/16" or a zero width is reached. If a plate less than 4" wide is necessary, the next heavier beam in the same series or the lightest beam of the next deeper series is tried in the same manner. The first beam and plates combination found that will support the specified loading without exceeding the allowable stress, deflection, or thickness requirements is presented in the output.

The program has provision for designing two beams with cover plates; BEAM 1 and BEAM 2, with one input form. And, each option can be designed without a cover plate as well as with a cover plate. However, in an analysis problem, the program can only accept one beam (BEAM 1).

a. DEPTH (c.c. 2, 3 and 9, 10) Form: XX (00,18,21,...36)

The DEPTH must be given for an analysis (D/A=1) problem. The DEPTH and WEIGHT control the three options which determine the first trial beam used in a design (D/A=0) problem.

Option 1. The DEPTH is given as zero and the WEIGHT must also be zero (blanks are not allowed). The program uses the span length in inches divided by 25 to determine the minimum nominal depth rolled steel shape to consider. The lightest beam in this series is used for the first trial design beam.

Option 2. The DEPTH is given as 18, 21, ... or 36 and the WEIGHT is defined as zero (blank). The program adds plates to the lightest beam with this nominal depth for the first trial design.

Option 3. The DEPTH is given as 18, 21, ... or 36 and the WEIGHT is also given. The program adds plates to this beam as the first trial design.

b. WEIGHT (c.c. 6-8 and 13-15) Form: XXX pounds per foot.

WEIGHT is the weight of the rolled steel shape in pounds per foot of the beam being analyzed (D/A=1) or the first trial design beam (D/A=0) of option 3 above.

c. P (c.c. 16) Form: X (0, blank or 1)

The digit one signals the program to design BEAM 1 option with the cover plates input in card 4. The one also tells the program to design a plate for the beam defined by BEAM 2 option. For BEAM 2,

the plates sizes input in card 4 are ignored, i.e., the program selects the cover plate without the restrictions given in the Cover Plate data. (See example RP-2 on page 3-31.)

d. NP (c.c. 17) Form: X (0, blank or 1)

The digit one input tells the program to design the beam options specified in 1 and 2 above without plates (No Plates). See example RP-3 on page 3-39.

Note: The P and NP codes are applicable to Beam Types "RP" and "CB" only. The two beam options are applicable to Beam Types "RB", "RP", and "CB". The BEAM 2 option is available for design only (D/A=0), i. e., only one beam can be analyzed (D/A=1) with each input form.

2. SECTION PROPERTIES (c.c. 18-35) For analysis (D/A=1) only.

SECTION PROPERTIES gives the program the capability to analyze any symmetrical section to which cover plates (top and bottom) can be added to change the section as necessary, i.e., a built up section can have extra plate thickness added to the top and bottom as cover plates.

a. I_o IN.^{4} (c.c. 18-25) Form: XXXXXXX.X inches to the fourth power.

This is the moment of inertia of the symmetrical section in inches to the fourth power. The plates to be added in card 4 are <u>not</u> included in this section. The area of this section is computed from the WT.BM. (card columns 48-51) and WT.BM.MAT'L (card columns 60-62) given in card number one (1 in c.c. 1).

b. YTOP (c.c. 26-30) Form: XX.XXX inches.

YTOP is half the depth of the section given in I_o above.

c. YBOT (c.c. 31-35) Form: XX.XXX inches.

YBOT is equal to YTOP but must be given, i.e., if a non-standard section is to be analyzed YTOP AND YBOT must be greater than zero. This is all the data necessary in this card for analyzing a rolled beam with plates (RP) made up of a symmetrical section with plates top and bottom as necessary.

E. COVER PLATE DATA (4 in c.c. 1)

The program has the capability to design or analyze one plate on the top of the beam and one plate on the bottom of the beam. The design results will be symmetrical, i.e., the plates will be the same top and bottom. The plates for purposes of analysis need not be the same, i.e., the thickness, width, and length of the top and bottom plate need not be the same.

1. BOTTOM COVER PLATE (c.c. 27-45)

a. X-BEG (c.c. 27-30) Form: XX.XX feet.

X-BEG is the distance in feet to the beginning of the bottom plate from the left support. This distance is required for an analysis (D/A=1) problem, but is computed by the program for a design (D/A=0) problem. Therefore any data in X-BEG will be ignored in a design (D/A=0) problem. This X-BEG distance allows the Engineer to analyze a plate welded off center.

b. THICK (c.c. 31-35) Form: X.XXXX inches.

THICK is the thickness of the bottom plate. This thickness is required for an analysis (D/A=1) problem, but is computed by the program for a design (D/A=0) problem. If a thickness is given

in a design problem, it will be treated as a minimum thickness. Therefore, the program will not select a thinner plate. A minimum value of 5/16" is assumed by the program if a value of zero (or blank) is given.

c. WIDTH (c.c. 36-39) Form: XX.XX inches.

WIDTH is the width in inches of the bottom cover plate. WIDTH is required for an analysis (D/A=1) problem and can be used to limit the maximum width for a design (D/A=0) problem. When WIDTH is blank or zero for a design (D/A=0) problem, the program computes a narrow plate with a width equal to the beam flange width minus 1½" (±). This narrow plate is incremented from 5/16" in thickness in 1/16" increments until a workable solution is found or 1½ times the flange thickness is exceeded. When a workable solution is not found, the plate width is increased to at least 3" wider than the beam flange width. This wide plate is then incremented from 5/16" in 1/16" increments until a workable solution is found or 1½ times the flange thickness is exceeded. If no workable solution is found the next heavier beam in the same series or the lightest beam of the next deeper series is tried in the same manner. When no satisfactory combination of plates and beam can be found "ROLLED BEAM UNAVAILABLE" is printed in the output. When a workable solution is found with a plate that has a thickness less than minimum, the plate width is decremented in ½" decrements until the thickness is incremented to minimum or a zero width is reached. If a plate less than 4" wide is necessary the next heavier beam in the same series

or the lightest beam of the next deeper series is tried in the same manner. The first beam and plates combination found that will support the specified loading conditions without exceeding the allowable stress, deflection, or thickness requirements is presented in the output.

d. LENGTH (c.c. 40-45) Form: XXX.XXX feet.

LENGTH is the length in feet of the bottom plate. This length is required for an analysis (D/A-1) problem, but is computed by the program for a design (D/A=0) problem. Therefore any data in LENGTH will be ignored in a design (D/A=0) problem.

2. TOP COVER PLATE (c.c. 46-64)

a. X-BEG (c.c. 46-49) Form: XX.XX feet.

X-BEG is the distance in feet to the beginning of the top plate from the left support. This distance is required for an analysis (D/A=1) problem, but is computed by the program for a design (D/A=0) problem. Therefore any data in X-BEG will be ignored in a design (D/A=0) problem. This X-BEG distance allows the Engineer to analyze a plate welded off center.

b. THICK (c.c. 50-54) Form: X.XXXX inches.

THICK is the thickness in inches of the top plate. This thickness is required for an analysis (D/A=1) problem, but is computed by the program for a design (D/A=0) problem. Therefore any data in THICK will be ignored in a design (D/A=0) problem.

c. WIDTH (c.c. 55-58) Form: XX.XX inches.

WIDTH is the width in inches of top cover plate. WIDTH is required

for an analysis (D/A=1) problem, but is controlled by the bottom cover plate width for a design (D/A=0) problem. Hence, any data in WIDTH will be ignored in a design (D/A=0) problem. For the width options that are available in the program, see "BOTTOM COVER PLATE," "WIDTH."

d. LENGTH (c.c. 59-64) Form: XXX.XXX feet.

LENGTH is the length in feet of the top cover plate. This length is required for an analysis (D/A=1) problem, but is computed by the program for a design (D/A=0) problem. Therefore any data in LENGTH will be ignored in a design (D/A=0) problem.

ROLLED BEAM WITH COVER PLATES

OUTPUT DATA

A. The first page of the output listing contains the input data and should be be checked to verify that the proper quantities were punched in the input data cards.

B. The second page of the output listing tabulates the BEAM PROPERTIES, COVER PLATES, and the BEAM WITH PLATES PROPERTIES.

1. BEAM PROPERTIES: (From AISC Handbook)

   a. BEAM XXWFXXX Example: 27WF 84

      Nominal depth and weight in pounds per foot of the rolled steel shape. If the problem is a design, this is the beam selected by the program.

   b. AREA is the area in square inches of the WF beam.

   c. DEPTH is the depth in inches of the WF beam.

   d. FL.W is the flange width in inches of the WF beam.

   e. FL.T is the flange thickness in inches of the WF beam.

   f. WEB T is the web thickness in inches of the WF beam.

   b. I is the moment of inertia in inches to the fourth power of the WF beam.

2. COVER PLATES:

   a. X-BEGIN is the distance in feet from the left support to the beginning of the bottom (or top) cover plate. On a design problem (D/A=0), this distance is determined by the allowable fatigue stress adjacent to or connected by fillet welds (AASHO Specifica-

ations, TENTH EDITION*, 1969), or the theoretical end of the cover plate minus $1\frac{1}{2}$ times the cover plate width, whichever is less.

b. THICKNESS is the thickness in inches of the bottom (or top) cover plate.

c. WIDTH is the width in inches of the bottom (or top) cover plate.

d. LENGTH is the length in feet of the bottom (or top) cover plate. For a design problem this distance is the length of the span minus two times X-BEGIN.

* Interims 1970, 1971.

3. BEAM WITH PLATES PROPERTIES:

a. AREA is the Area of Steel of the combined cover plates and the beam.

b. YTOP is the distance in inches from the centroid to the extreme fiber at the top of the section with the cover plates.

c. YBOT is the distance in inches from the centroid to the extreme fiber at the bottom of the section with the cover plates.

d. I is the moment of inertia in inches to the fourth power of the section with the cover plates.

e. MIN TERMINAL WELD is the minimum terminal weld size based on the stress in the bottom plate at the theoretical end, the thickness of the plate, or flange whichever produces the largest weld size. Fatigue is considered in the weld metal.

C. The third page of the output listing tabulates the MOMENTS (K-FT.) and the STRESS (PSI) at the 1/20th points in the span for the left half of the span.

1. MOMENTS (K-FT.) AT SPAN 1/20 POINTS.

a. SP lists the span points in 20ths.

b. GIRDER lists the moments in kip-feet due to the weight of the beam and cover plates only.

c. P-LOAD lists the moments in kip-feet due to the concentrated loads only.

d. NON-C lists the moments in kip-feet due to the uniform dead load (WDLnc) only.

e. TOT.NC lists the sum of the GIRDER, P-LOAD, and NON-C moments in kip-feet.

f. COMP. lists the moments in kip-feet due to the uniform dead load input (WDLc) only.

g. SIDEWK lists the moments in kip-feet due to the sidewalk live load.

h. LIVE LOAD lists the moments in kip-feet due to the live load. Moments due to highway live loads include impact while railroad moments do not include impact. The letter code after the moment indicates the type of live load that governs as follows:

1) T designates the moment is due to the truck live load.

2) L designates the moment is due to the lane live load.

3) M designates the moment is due to the military live load.

4) R designates the moment is due to the railroad live load.

i. RR-I lists the moment in kip-feet due to railroad impact and is considered for railroad live load only.

2. STRESS (PSI) AT SPAN 1/20 POINTS.

A positive stress indicates compression. A negative stress indicates tension.

a. MINIMUM STRESS

1) SP lists the span point in 20ths.

2) TOP-S lists the minimum stress in psi at the top of the beam due to the dead loads.

3) BOT-S lists the minimum stress in psi at the bottom of the beam due to the dead loads.

b. MAXIMUM STRESS: If the problem is a design, the maximum stress should not exceed the allowable stress.

1) TOP-C lists the maximum stress in psi at the top of the concrete for a composite beam. For a rolled beam with plates (RP) this has a value of zero (0).

2) TOP-S lists the maximum stress in psi at the top of the beam or plate due to the dead and live loads.

3) BOT-S lists the maximum stress in psi at the bottom of the beam or plate due to the dead and live loads.

c. ALLOWABLE FS lists the allowable stress in the steel (base metal) considering the type of steel and/or the beam group. Fatigue is not considered, i.e., fatigue does not control base metal allowable stress in simple spans.

d. R FACTOR

1) TOP-S lists the ratio of the minimum stress to the maximum stress at the top of the beam or plate.

2) BOT-S lists the ratio of the minimum stress to the maximum stress at the bottom of the beam or plate.

C. The fourth page of the output listing tabulates the SHEARS (KIPS), the DEAD LOAD DEFLECTIONS (INCHES), the SHEAR RANGE (KIPS), the SHEAR CON. SPAC (IN), and the LIVE LOAD DEFLECTIONS (INCHES).

Shear is not considered when designing a Rolled beam with cover plates.

1. SHEARS (KIPS) AT SPAN 1/20 POINTS.

a. SP lists the span point in 20ths.

b. GIRDER lists the shears in kips due to the weight of the beam, and cover plates only.

c. P-LOAD lists the shears in kips due to the concentrated loads only.

d. NON-C lists the shears in kips due to the uniform dead load only (WDLnc).

e. TOT.NC lists the total of GIRDER, P-LOAD, and NON-C.

f. COMP. lists the shears in kips due to the uniform dead load given as WDLc.

g. SIDEWK lists the maximum positive shears in kips due to the sidewalk live load.

h. LIVE LOAD lists the maximum shears due to the standard highway or railroad live load. Shears due to highway live loads include impact while railroad shears do not include impact. The letter code after the shear value indicates the type of live load which controlled as follows:

1) T designates the shear is due to the truck live load.

2) L designates the shear is due to the lane live load.

3) M designates the shear is due to the military live load.

4) R designates the shear is due to the railroad live load.

i. RR-I lists the shears due to railroad impact and is considered with railroad live load only.

2. DEAD LOAD DEFLECTIONS (INCHES)

a. SP lists the span point in 20ths.

b. GIRDER lists the deflection in inches due to the beam and cover plates only.

c. P-LOAD lists the deflection in inches due to the concentrated loads only.

d. NON-C lists the deflection in inches due to the uniform dead load (WDLnc) only.

e. TOT.NC lists the total of GIRDER, P-LOAD, and NON-C.

f. COMP. lists the deflection due to the uniform dead load input in WDLc.

3. SHEAR

a. RANGE (KIPS) lists the difference in the minimum and maximum shear envelopes (excluding dead loads). The loading condition creating the maximum positive shear is listed (T,L,M,R) under LIVE LOAD and SIDEWK. The loading condition creating the maximum negative shear is not identified. Therefore, the RANGE (KIPS) may be sidewalk combined with truck and lane, lane and military, or truck and military; depending on which loading condition results in the maximum negative shear and whether it is a different loading condition than results in the maximum positive shear.

b. CON.SPA (IN) lists the shear connector spacing for composite construction. For a rolled beam with cover plates this is assigned a zero (0) value.

4. LIVE LOAD DEFLECTIONS (INCHES)

The live load deflections take into consideration impact (50/(L + 125) or 30% maximum for highway live loads and input (DFV) for railroad live loading), and the distribution factor (DFD) for deflections. If the problem is a design, the maximum live load deflection should not exceed the allowable live load deflection

a. TRUCK lists the maximum deflection in inches at the center line of the span due to the specified (H or HS) truck loading.

b. LANE lists the maximum deflection in inches at the center line of the span due to the specified lane loading.

c. MILITARY lists the maximum deflection in inches at the center line of the span due to the military loading

d. RAILROAD lists the deflection in inches computed by treating the maximum distributed moment, plus impact, due to the specified railroad live load at the center line of the span as the middle ordinate of a parabolic moment diagram. The beam is loaded with the resulting M/EI diagram and the center line deflection is computed by Simpson's rule for numerical integration. The results compare favorably (conservative by about 5%) with the deflection computed by using the actual M/EI diagram for the maximum moment at the centerline of a one hundred foot span.

e. SIDEWALK lists the deflection in inches at the center line of the span due to the sidewalk live load.

f. L/800 lists the allowable deflection in inches for highway live loads as the length of the span divided by eight hundred.
L/640 lists the allowable deflection in inches for railroad live loads as the length of the span divided by six hundred forty.
L/1000 lists the allowable deflection in inches when the sidewalk is loaded, as the length of the span divided by one thousand.

ROLLED BEAM WITH PLATES (RP)

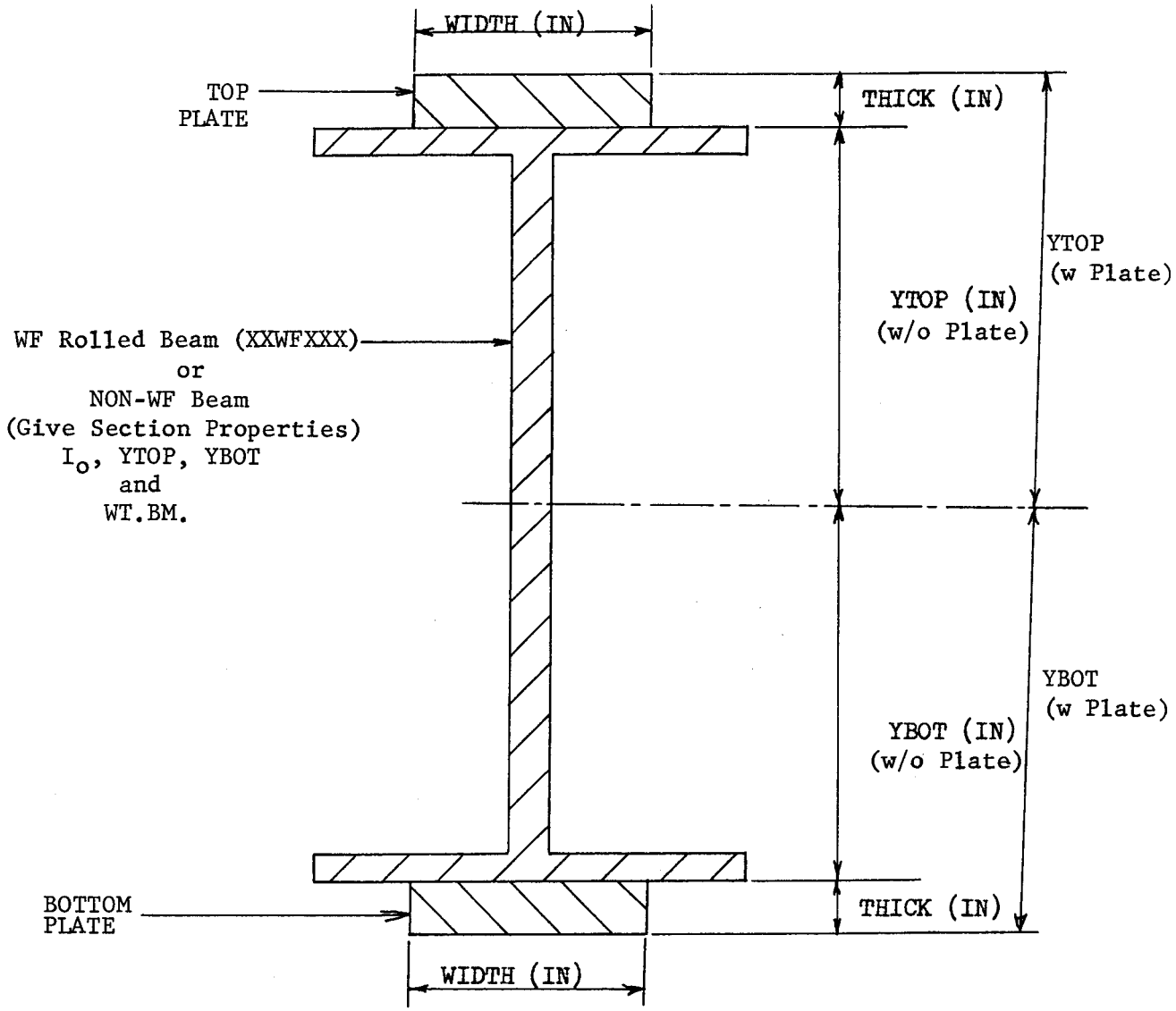

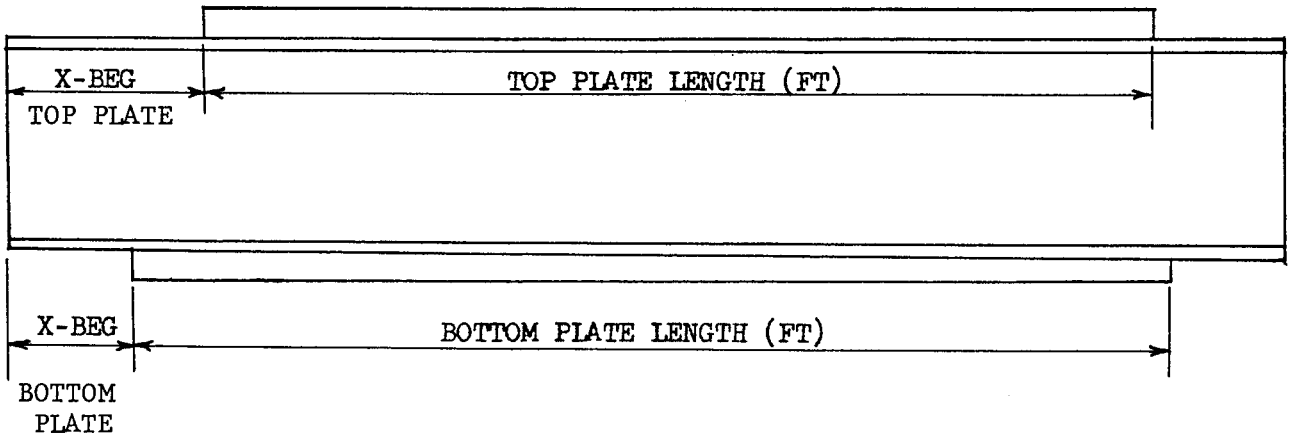

ROLLED BEAM WITH PLATES

EXAMPLE PROBLEMS

There are five different approaches to using this program.

1. Design a beam using L/25 to determine the minimum depth WF section to use for the first trial design. (See example RP-1 on page 3-26.)
2. Design a beam giving the preferred depth of the beam. (See example RP-2 on page 3-31.)
3. Design a beam giving the desired WF beam. (See example RP-3 on page 3-39.)
4. Analyze a given wide flange beam with plates top and bottom. (See example RP-4 on page 3-47.)
5. Analyze a given symmetrical section with plates added separately top and bottom. (See example RP-5 on page 3-52).

The following live loading conditions are explored:

1. H20, see example RP-1 on page 3-26.
2. HS20, see example RP-2 on page 3-31.
3. HS00, excluding military (sidewalk live load only), see example RP-3 on page 3-39.
4. HS15 with sidewalk, see example RP-4 on page 3-47.
5. RR72, see example RP-5 on page 3-52.

The allowable steel stresses are examined as indicated:

1. Type A36 steel, RP-2 on page 3-31.

2. Type A441 steel, examples RP-3 on page 3-39, and RP-4 on page 3-47.

3. Type A588 steel, example RP-1 on page 3-26.

4. Type A572 steel, example RP-5 on page 3-52.

The minimum plate thickness and maximum plate width controls are illustrated in example RP-2 on page 3-31.

Two designs from one input data form:

1. Two different beams, example RP-2 on page 3-31.

2. With and without plates, example RP-3 on page 3-39.

SIMPLE SPAN

10-15-70

STATE HIGHWAY DEPARTMENT OF GEORGIA
BRIDGE DIVISION

IDENTIFICATION

"CONT" TO CONTINUE REMARKS

PROG.	PROB. NO.	PROJECT NO.	COUNTY	DATE	DESIGNER	ETC.	
*B,0,4	R,P,-,1	USING L/25 TO GET DEPTH BEAMS SPACED 7-0 ROADWAY 28-0					CONT
*WIDE H 20 LOADING USE 588 STEEL 60-0 SPAN							

SPAN DATA

	CODE TYPE	D/A	LIVE LOAD CLASS	T	L	M	SPAN LENGTH	DFM	DFV	DFD	NPL	WDLNC	WDLC	WSWK	EBEAM X 10^6	WT.BM.	ALLOW. STRESS STEEL	ALLOW. STRESS CONC.	WT.BM. MAT'L.	TYPE STEEL
1	RP		H 20				60-0	1.273	1.429	8.00	4	.777	.105		29.00				490	588

1 = ANALYSIS (D/A) 1 = SKIP (T, L, M)
BLANK = DESIGN (D/A)

CONCENTRATED LOADS (LIMIT 40)

	X1	P1	X2	P2	X3	P3	X4	P4
2 1	0-0	1.680	20-0	2.100	40-0	2.100	60-0	1.680
2 2								
2 3								
2 4								

CODE: TYPE
RB – ROLLED BEAM
RP – ROLLED W/PLATE
CB – COMPOSITE ROLLED
PG – PLATE GIRDER
CG – COMPOSITE GIRDER
TB – CONCRETE BEAM

STEEL BEAM DATA

	ROLLED BEAM: BEAM 1 DEPTH & WEIGHT	BEAM 2 DEPTH & WEIGHT	P	NP	NON-STANDARD BEAM: SECTION PROPERTIES I_o IN.^4	YTOP	YBOT.	PLATE GIRDER: WEB DEPTH	WEB THICK.	TOP FLANGE WIDTH	TOP FLANGE THICK.	BOTTOM FLANGE WIDTH	BOTTOM FLANGE THICK.	CONN. W	CONN. T
3	0,0 WF	0,0,0 WF													

1 = CONSTANT THICKNESS (T) WIDTH (W)

	COMPOSITE SLAB: EFFECTIVE WIDTH	THICK.	COPING	SHEAR CONN. ΣZr	SU	N ES/EC	BOTTOM COVER PLATE: X-BEG.	THICK.	WIDTH	LENGTH	TOP COVER PLATE: X-BEG.	THICK.	WIDTH	LENGTH
4								50-0						

P = 1 DESIGN WITH ℞'s
N.P. = 1 DESIGN WITHOUT ℞'s

CONCRETE BEAM DATA (T, RECT., FLAT SLAB)

	"N" TEN.	COM.	NO. ROWS	BEAM (WEB) IN. WIDTH	ΔW	DEPTH	ΔD	'T' SLAB WIDTH	THICK.	COMPRESSION ST. NO.	SIZE	Δ	DIST.	ROW ONE NO.	SIZE	Δ	DIST.	ROW TWO NO.	SIZE	Δ	DIST.
3																					

	ROW THREE NO.	SIZE	Δ	DIST.	ROW FOUR NO.	SIZE	Δ	DIST.	ROW FIVE NO.	SIZE	Δ	DIST.	ROW SIX NO.	SIZE	Δ	DIST.	ROW SEVEN NO.	SIZE	Δ	DIST.	ROW EIGHT NO.	SIZE	Δ	DIST.	ROW NINE NO.	SIZE	Δ	DIST.
4																												

LENGTH – FT.
WDLNC – K/FT.
WDLC – K/FT.
WT. BM. – K/FT.

COPING – IN.
AL. STRESS – K.S.I.
WT. BM. MAT'L. – PCF
WSWK – K/FT.
X_n – FT.

DIMENSIONS

P_n – KIPS.
TYPE STEEL – 572, 588
DEPTH – IN.
THICK. – IN.

WEIGHT – LBS.
YTOP – IN.
ΣZr – K/ROW
X-BEG. – FT.
WIDTH – IN.

YBOT. – IN.
SU – K/EA.
SIZE – BAR SIZE (#4, #10, etc.)
Δ – INCREMENT (NO. OF BARS)
DIST. – IN.

SIMPLE SPAN INPUT DATA PROBLEM NUMBER RP-1

02/03/71 USING L/25 TO GET DEPTH BEAMS SPACED 7-0 ROADWAY 28-0 CONT

WIDE H 20 LOADING USE 588 STEEL 60-0 SPAN

SPAN DATA

BEAM	D/A	L.L.C.	T L M	LENGTH	D.F.M.	D.F.V.	D.F.D.	NPL
RP	0	H 20	0 0 0	60.000	1.273	1.429	0.800	4

WDLNC	WDLC	SWLL	E	W BM	FS	FC	WG	TYPE STEEL
0.777	0.105	0.0	29.00	0.0	0.0	0.0	0.490	588

CONCENTRATED LOADS

X1	P1	X2	P2	X3	P3	X4	P4
0.0	1.680	20.000	2.100	40.000	2.100	60.000	1.680

BEAM DATA

ROLLED		SECTION PROPERTIES			PLATE GIRDER WEB		TOP FLANGE		BOTTOM FLANGE	
BEAM	P NP	I	Y TOP	Y BOT	D	T	W	T	W	T
OWF	0 0 0	0.0	0.0	0.0	0.0	0.0	0.0	0.0	0.0	0.0
OWF	0									

BOTTOM COVER PLATE				TOP COVER PLATE				CONSTANT	
X-BEGIN	THICKNESS	WIDTH	LENGTH	X-BEGIN	THICKNESS	WIDTH	LENGTH	W	T
0.0	0.5000	0.0	0.0	0.0	0.0	0.0	0.0	0	0

SIMPLE SPAN OUTPUT DATA PROBLEM NUMBER RP-1

BEAM PROPERTIES

BEAM	AREA	DEPTH	FL. W	FL. T	WEB T	I
30WF 99	29.100	29.640	10.458	0.670	0.522	4000.0

COVER PLATES

BOTTOM COVER PLATE				TOP COVER PLATE			
X-BEGIN	THICKNESS	WIDTH	LENGTH	X-BEGIN	THICKNESS	WIDTH	LENGTH
5.31	0.8125	9.00	49.38	5.31	0.8125	9.00	49.38

BEAM WITH PLATES PROPERTIES

AREA	Y-TOP	Y-BOTTOM	I	MIN TERMINAL WELD
43.725	15.632	15.632	7391.4	6/16

SIMPLE SPAN OUTPUT DATA PROBLEM NUMBER RP-1

MOMENTS (K-FT.) AT SPAN 1/20 POINTS

SP	GIRDER	P-LOAD	NON-C.	TOT.NC	COMP.	SIDEWK	LIVE LOAD	RR-I
1	12.2	6.3	66.4	84.9	9.0	0.0	106.7 M	0.0
2	23.4	12.6	125.9	161.9	17.0	0.0	201.8 M	0.0
3	33.4	18.9	178.3	230.7	24.1	0.0	285.2 M	0.0
4	42.1	25.2	223.8	291.1	30.2	0.0	357.0 M	0.0
5	49.5	31.5	262.2	343.2	35.4	0.0	417.2 M	0.0
6	55.5	37.8	293.7	387.0	39.7	0.0	465.7 M	0.0
7	60.2	42.0	318.2	420.4	43.0	0.0	502.6 M	0.0
8	63.6	42.0	335.7	441.2	45.4	0.0	527.8 M	0.0
9	65.6	42.0	346.2	453.7	46.8	0.0	541.4 M	0.0
10	66.2	42.0	349.6	457.9	47.2	0.0	543.3 M	0.0

STRESS (PSI) AT SPAN 1/20 POINTS

	MINIMUM STRESS		MAXIMUM STRESS			ALLOWABLE	R FACTOR	
SP	TOP-S	BOT-S	TOP-C	TOP-S	BOT-S	FS	TOP-S	BOT-S
1	4173	-4173	0	8918	-8918	27000	0.468	0.468
2	4539	-4539	0	9661	-9661	27000	0.470	0.470
3	6465	-6465	0	13705	-13705	27000	0.472	0.472
4	8155	-8155	0	17217	-17217	27000	0.474	0.474
5	9610	-9610	0	20198	-20198	27000	0.476	0.476
6	10830	-10830	0	22649	-22649	27000	0.478	0.478
7	11760	-11760	0	24515	-24515	27000	0.480	0.480
8	12349	-12349	0	25744	-25744	27000	0.480	0.480
9	12702	-12702	0	26442	-26442	27000	0.480	0.480
10	12820	-12820	0	26609	-26609	27000	0.482	0.482

SHEARS (KIPS) AT SPAN 1/20 POINTS RP-1

SP	GIRDER	P-LOAD	NON-C.	TOT.NC	COMP.	SIDEWK	LIVE LOAD	RR-I
0	4.2	3.8	23.3	31.3	3.1	0.0	39.9 M	0.0
1	3.9	2.1	21.0	27.0	2.8	0.0	35.7 M	0.0
2	3.6	2.1	18.6	24.3	2.5	0.0	33.9 M	0.0
3	3.1	2.1	16.3	21.5	2.2	0.0	32.0 M	0.0
4	2.7	2.1	14.0	18.8	1.9	0.0	30.2 M	0.0
5	2.2	2.1	11.7	16.0	1.6	0.0	28.3 M	0.0
6	1.8	2.1	9.3	13.2	1.3	0.0	26.5 M	0.0
7	1.3	-0.0	7.0	8.3	0.9	0.0	24.5 M	0.0
8	0.9	-0.0	4.7	5.6	0.6	0.0	22.5 M	0.0
9	0.4	-0.0	2.3	2.8	0.3	0.0	20.5 M	0.0
10	-0.0	-0.0	-0.0	-0.0	-0.0	0.0	18.5 M	0.0

	DEAD LOAD DEFLECTIONS (INCHES)					SHEAR	
SP	GIRDER	P-LOAD	NON-C.	TOT.NC	COMP.	RANGE(KIPS)	CON.SPAC(IN)
0	0.0	0.0	0.0	0.0	0.0	39.9	0.0
1	0.033	0.021	0.174	0.228	0.024	37.0	0.0
2	0.064	0.041	0.340	0.445	0.046	36.5	0.0
3	0.093	0.060	0.494	0.647	0.067	36.7	0.0
4	0.120	0.077	0.636	0.833	0.086	36.8	0.0
5	0.144	0.093	0.761	0.998	0.103	36.9	0.0
6	0.164	0.106	0.868	1.138	0.117	37.1	0.0
7	0.180	0.117	0.953	1.249	0.129	37.1	0.0
8	0.192	0.124	1.015	1.331	0.137	37.1	0.0
9	0.199	0.129	1.052	1.380	0.142	37.1	0.0
10	0.201	0.131	1.065	1.397	0.144	37.1	0.0

LIVE LOAD DEFLECTIONS (INCHES)

TRUCK	LANE	MILITARY	RAILROAD	SIDEWALK	L/ 800
0.706	0.779	0.881	0.0	0.0	0.900

SIMPLE SPAN

10-15-70

STATE HIGHWAY DEPARTMENT OF GEORGIA
BRIDGE DIVISION

IDENTIFICATION

"CONT" TO CONTINUE REMARKS

PROG.	PROB. NO.	PROJECT NO.	COUNTY	DATE	DESIGNER	ETC.	
* B04	RP-2	FIND 24WF AND 27WF THAT WILL CARRY LOADS	A36 STEEL	7-0			CONT
* SPACING PLATES MIN THICKNESS 0.5 MAX WIDTH 7.5							

SPAN DATA

CODE TYPE	CODE D/A	LIVE LOAD CLASS	T	L	M	SPAN LENGTH	DFM	DFV	DFD	NPL	WDLNC	WDLC	WSWK	EBEAM X 10^6	WT.BM.	ALLOW. STRESS STEEL	ALLOW. STRESS CONC.	WT.BM. MAT'L.	TYPE STEEL
RP		HS20				50.0	1.273	1.479	0.800	3	.777	.105		29.00				490	36

1 = ANALYSIS (D/A) 1 = SKIP (T, L, M)
BLANK = DESIGN (D/A)

CONCENTRATED LOADS (LIMIT 40)

	X1	P1	X2	P2	X3	P3	X4	P4
2 1	0.0	1.680	25.0	2.100	50.0	1.680		
2 2								
2 3								
2 4								

CODE: TYPE
RB – ROLLED BEAM
RP – ROLLED W/PLATE
CB – COMPOSITE ROLLED
PG – PLATE GIRDER
CG – COMPOSITE GIRDER
TB – CONCRETE BEAM

STEEL BEAM DATA

ROLLED BEAM: BEAM 1 DEPTH & WEIGHT			BEAM 2 DEPTH & WEIGHT			P	NP	NON-STANDARD BEAM: SECTION PROPERTIES Io IN.^4	YTOP	YBOT.	PLATE GIRDER: WEB DEPTH	WEB THICK.	TOP FLANGE WIDTH	TOP FLANGE THICK.	BOTTOM FLANGE WIDTH	BOTTOM FLANGE THICK.	CONT. W	CONT. T
3	24	WF	27	WF		1												

1 = CONSTANT THICKNESS (T) WIDTH (W)

COMPOSITE SLAB: EFFECTIVE WIDTH	THICK.	COPING	SHEAR CONN. ΣZr	SU	N ES/EC	BOTTOM COVER PLATE X-BEG.	THICK.	WIDTH	LENGTH	TOP COVER PLATE X-BEG.	THICK.	WIDTH	LENGTH
4							50.00	750					

P = 1 DESIGN WITH ℄'s
N.P. = 1 DESIGN WITHOUT ℄'s

CONCRETE BEAM DATA (T, RECT., FLAT SLAB)

"N" TEN.	"N" COM.	NO. ROWS	BEAM (WEB) IN. WIDTH	ΔW	DEPTH	ΔD	'T' SLAB WIDTH	THICK.	COMPRESSION ST. NO.	SIZE	Δ	DIST.	ROW ONE NO.	SIZE	Δ	DIST.	ROW TWO NO.	SIZE	Δ	DIST.
3																				

ROW THREE NO.	SIZE	Δ	DIST.	ROW FOUR NO.	SIZE	Δ	DIST.	ROW FIVE NO.	SIZE	Δ	DIST.	ROW SIX NO.	SIZE	Δ	DIST.	ROW SEVEN NO.	SIZE	Δ	DIST.	ROW EIGHT NO.	SIZE	Δ	DIST.	ROW NINE NO.	SIZE	Δ	DIST.
4																											

DIMENSIONS

LENGTH – FT.
WDLNC – K/FT.
WDLC – K/FT.
WT. BM. – K/FT.
COPING – IN.
AL. STRESS – K.S.I.
WT. BM. MAT'L. – PCF
WSWK – K/FT.
Xn – FT.
Pn – KIPS
TYPE STEEL – 572, 588
DEPTH – IN.
THICK. – IN.
WEIGHT – LBS.
YTOP – IN.
ΣZr – K/ROW
X-BEG. – FT.
WIDTH – IN.
YBOT. – IN.
SU – K/EA.
SIZE – BAR SIZE (#4, #10, etc.)
Δ – INCREMENT (NO. OF BARS)
DIST. – IN.

SIMPLE SPAN INPUT DATA PROBLEM NUMBER RP-2

02/03/71 FIND 24WF AND 27WF THAT WILL CARRY LOADS A36 STEEL 7-0 CONT

SPACING PLATES MIN THICKNESS 0.5 MAX WIDTH 7.5

SPAN DATA

BEAM	D/A	L.L.C.	T L M	LENGTH	D.F.M.	D.F.V.	D.F.D.	NPL
RP	0	HS20	0 0 0	50.000	1.273	1.429	0.800	3

WDLNC	WDLC	SWLL	E	W BM	FS	FC	WG	TYPE STEEL
0.777	0.105	0.0	29.00	0.0	0.0	0.0	0.490	36

CONCENTRATED LOADS

X1	P1	X2	P2	X3	P3	X4	P4
0.0	1.680	25.000	2.100	50.000	1.680	0.0	0.0

BEAM DATA

ROLLED			SECTION PROPERTIES			PLATE GIRDER WEB		TOP FLANGE		BOTTOM FLANGE	
BEAM	P	NP	I	Y TOP	Y BOT	D	T	W	T	W	T
24WF	0	1 0	0.0	0.0	0.0	0.0	0.0	0.0	0.0	0.0	0.0
27WF	0										

BOTTOM COVER PLATE				TOP COVER PLATE				CONSTANT	
X-BEGIN	THICKNESS	WIDTH	LENGTH	X-BEGIN	THICKNESS	WIDTH	LENGTH	W	T
0.0	0.5000	7.50	0.0	0.0	0.0	0.0	0.0	0	0

SIMPLE SPAN OUTPUT DATA PROBLEM NUMBER RP-2

BEAM PROPERTIES

BEAM	AREA	DEPTH	FL. W	FL. T	WEB T	I
24WF120	35.400	24.310	12.088	0.930	0.556	3650.0

COVER PLATES

BOTTOM COVER PLATE				TOP COVER PLATE			
X-BEGIN	THICKNESS	WIDTH	LENGTH	X-BEGIN	THICKNESS	WIDTH	LENGTH
7.19	1.3750	7.50	35.63	7.19	1.3750	7.50	35.63

BEAM WITH PLATES PROPERTIES

AREA	Y-TOP	Y-BOTTOM	I	MIN TERMINAL WELD
56.025	13.530	13.530	7054.9	8/16

SIMPLE SPAN OUTPUT DATA PROBLEM NUMBER RP-2

MOMENTS (K-FT.) AT SPAN 1/20 POINTS

SP	GIRDER	P-LOAD	NON-C.	TOT.NC	COMP.	SIDEWK	LIVE LOAD	RR-I
1	10.3	2.6	46.1	59.0	6.2	0.0	112.4 T	0.0
2	19.8	5.2	87.4	112.4	11.8	0.0	210.2 T	0.0
3	28.5	7.9	123.8	160.2	16.7	0.0	293.1 T	0.0
4	36.2	10.5	155.4	202.1	21.0	0.0	361.4 T	0.0
5	42.8	13.1	182.1	238.0	24.6	0.0	414.9 T	0.0
6	48.1	15.7	204.0	267.8	27.6	0.0	453.7 T	0.0
7	52.3	18.4	221.0	291.6	29.9	0.0	482.3 T	0.0
8	55.2	21.0	233.1	309.3	31.5	0.0	505.4 T	0.0
9	57.0	23.6	240.4	321.0	32.5	0.0	513.8 T	0.0
10	57.6	26.2	242.8	326.7	32.8	0.0	507.4 T	0.0

STRESS (PSI) AT SPAN 1/20 POINTS

	MINIMUM STRESS		MAXIMUM STRESS			ALLOWABLE	R FACTOR	
SP	TOP-S	BOT-S	TOP-C	TOP-S	BOT-S	FS	TOP-S	BOT-S
1	2607	-2607	0	7100	-7100	20000	0.367	0.367
2	4964	-4964	0	13362	-13362	20000	0.372	0.372
3	4072	-4072	0	10818	-10818	20000	0.376	0.376
4	5134	-5134	0	13451	-13451	20000	0.382	0.382
5	6043	-6043	0	15592	-15592	20000	0.388	0.388
6	6797	-6797	0	17239	-17239	20000	0.394	0.394
7	7398	-7398	0	18498	-18498	20000	0.400	0.400
8	7844	-7844	0	19475	-19475	20000	0.403	0.403
9	8135	-8135	0	19959	-19959	20000	0.408	0.408
10	8273	-8273	0	19950	-19950	20000	0.415	0.415

SHEARS (KIPS) AT SPAN 1/20 POINTS RP-2

SP	GIRDER	P-LOAD	NON-C.	TOT.NC	COMP.	SIDEWK	LIVE LOAD	RR-I
0	4.3	2.7	19.4	26.4	2.6	0.0	51.1 T	0.0
1	4.0	1.0	17.5	22.5	2.4	0.0	45.1 T	0.0
2	3.7	1.0	15.5	20.2	2.1	0.0	42.3 T	0.0
3	3.3	1.0	13.6	18.0	1.8	0.0	39.5 T	0.0
4	2.9	1.0	11.7	15.6	1.6	0.0	36.5 T	0.0
5	2.4	1.0	9.7	13.1	1.3	0.0	33.6 T	0.0
6	1.9	1.0	7.8	10.7	1.0	0.0	30.6 T	0.0
7	1.4	1.0	5.8	8.3	0.8	0.0	27.6 T	0.0
8	1.0	1.0	3.9	5.9	0.5	0.0	24.6 T	0.0
9	0.5	1.0	1.9	3.5	0.3	0.0	21.7 T	0.0
10	0.0	1.0	-0.0	1.0	-0.0	0.0	19.1 T	0.0

	DEAD LOAD DEFLECTIONS (INCHES)					SHEAR	
SP	GIRDER	P-LOAD	NON-C.	TOT.NC	COMP.	RANGE(KIPS)	CON.SPAC(IN)
0	0.0	0.0	0.0	0.0	0.0	51.1	0.0
1	0.022	0.007	0.093	0.123	0.013	46.4	0.0
2	0.043	0.015	0.182	0.239	0.025	45.0	0.0
3	0.061	0.021	0.262	0.344	0.035	43.8	0.0
4	0.078	0.027	0.333	0.439	0.045	42.9	0.0
5	0.093	0.033	0.397	0.523	0.054	41.9	0.0
6	0.106	0.038	0.450	0.594	0.061	40.9	0.0
7	0.116	0.042	0.493	0.651	0.067	39.9	0.0
8	0.124	0.045	0.525	0.693	0.071	38.9	0.0
9	0.128	0.046	0.544	0.718	0.073	38.1	0.0
10	0.130	0.047	0.550	0.727	0.074	38.1	0.0

LIVE LOAD DEFLECTIONS (INCHES)

TRUCK	LANE	MILITARY	RAILROAD	SIDEWALK	L/ 800
0.690	0.441	0.548	0.0	0.0	0.750

SIMPLE SPAN OUTPUT DATA PROBLEM NUMBER RP-2

BEAM PROPERTIES

BEAM	AREA	DEPTH	FL. W	FL. T	WEB T	I
27WF 84	24.800	26.690	9.963	0.636	0.463	2830.0

COVER PLATES

BOTTOM COVER PLATE				TOP COVER PLATE			
X-BEGIN	THICKNESS	WIDTH	LENGTH	X-BEGIN	THICKNESS	WIDTH	LENGTH
3.75	0.9375	13.00	42.51	3.75	0.9375	13.00	42.51

BEAM WITH PLATES PROPERTIES

AREA	Y-TOP	Y-BOTTOM	I	MIN TERMINAL WELD
49.175	14.282	14.282	7483.0	5/16

SIMPLE SPAN OUTPUT DATA PROBLEM NUMBER RP-2

MOMENTS (K-FT.) AT SPAN 1/20 POINTS

SP	GIRDER	P-LOAD	NON-C.	TOT.NC	COMP.	SIDEWK	LIVE LOAD	RR-I
1	9.4	2.6	46.1	58.2	6.2	0.0	112.4 T	0.0
2	18.2	5.2	87.4	110.9	11.8	0.0	210.2 T	0.0
3	26.0	7.9	123.8	157.7	16.7	0.0	293.1 T	0.0
4	32.8	10.5	155.4	198.7	21.0	0.0	361.4 T	0.0
5	38.5	13.1	182.1	233.8	24.6	0.0	414.9 T	0.0
6	43.2	15.7	204.0	263.0	27.6	0.0	453.7 T	0.0
7	46.9	18.4	221.0	286.2	29.9	0.0	482.3 T	0.0
8	49.5	21.0	233.1	303.6	31.5	0.0	505.4 T	0.0
9	51.1	23.6	240.4	315.1	32.5	0.0	513.8 T	0.0
10	51.6	26.2	242.8	320.6	32.8	0.0	507.4 T	0.0

STRESS (PSI) AT SPAN 1/20 POINTS

	MINIMUM STRESS			MAXIMUM STRESS		ALLOWABLE	R FACTOR	
SP	TOP-S	BOT-S	TOP-C	TOP-S	BOT-S	FS	TOP-S	BOT-S
1	3643	-3643	0	10006	-10006	20000	0.364	0.364
2	2809	-2809	0	7623	-7623	20000	0.369	0.369
3	3995	-3995	0	10709	-10709	20000	0.373	0.373
4	5032	-5032	0	13309	-13309	20000	0.378	0.378
5	5918	-5918	0	15421	-15421	20000	0.384	0.384
6	6653	-6653	0	17045	-17045	20000	0.390	0.390
7	7239	-7239	0	18287	-18287	20000	0.396	0.396
8	7675	-7675	0	19251	-19251	20000	0.399	0.399
9	7960	-7960	0	19727	-19727	20000	0.404	0.404
10	8095	-8095	0	19716	-19716	20000	0.411	0.411

SHEARS (KIPS) AT SPAN 1/20 POINTS RP-2

SP	GIRDER	P-LOAD	NON-C.	TOT.NC	COMP.	SIDEWK	LIVE LOAD	RR-I
0	3.9	2.7	19.4	26.0	2.6	0.0	51.1 T	0.0
1	3.7	1.0	17.5	22.2	2.4	0.0	45.1 T	0.0
2	3.3	1.0	15.5	19.9	2.1	0.0	42.3 T	0.0
3	2.9	1.0	13.6	17.6	1.8	0.0	39.5 T	0.0
4	2.5	1.0	11.7	15.2	1.6	0.0	36.5 T	0.0
5	2.1	1.0	9.7	12.8	1.3	0.0	33.6 T	0.0
6	1.7	1.0	7.8	10.5	1.0	0.0	30.6 T	0.0
7	1.3	1.0	5.8	8.1	0.8	0.0	27.6 T	0.0
8	0.8	1.0	3.9	5.8	0.5	0.0	24.6 T	0.0
9	0.4	1.0	1.9	3.4	0.3	0.0	21.7 T	0.0
10	-0.0	1.0	-0.0	1.0	-0.0	0.0	19.1 T	0.0

DEAD LOAD DEFLECTIONS (INCHES) SHEAR

SP	GIRDER	P-LOAD	NON-C.	TOT.NC	COMP.	RANGE(KIPS)	CON.SPAC(IN)
0	0.0	0.0	0.0	0.0	0.0	51.1	0.0
1	0.017	0.007	0.082	0.106	0.011	46.4	0.0
2	0.034	0.013	0.160	0.207	0.022	45.0	0.0
3	0.049	0.019	0.234	0.302	0.032	43.8	0.0
4	0.064	0.025	0.301	0.390	0.041	42.9	0.0
5	0.076	0.030	0.361	0.467	0.049	41.9	0.0
6	0.087	0.035	0.411	0.533	0.056	40.9	0.0
7	0.096	0.038	0.452	0.586	0.061	39.9	0.0
8	0.102	0.041	0.481	0.625	0.065	38.9	0.0
9	0.106	0.043	0.499	0.648	0.067	38.1	0.0
10	0.107	0.044	0.505	0.656	0.068	38.1	0.0

LIVE LOAD DEFLECTIONS (INCHES)

TRUCK	LANE	MILITARY	RAILROAD	SIDEWALK	L/ 800
0.636	0.407	0.507	0.0	0.0	0.750

SIMPLE SPAN

IDENTIFICATION

"CONT" TO CONTINUE REMARKS

PROG.	PROB. NO.	PROJECT NO.	COUNTY	DATE	DESIGNER	ETC.
* B04	RP-3	USING 36WF135 AS FIRST TRIAL FIND BEAM WITH PLATES AND CONT				
* BEAM W/O PLATES A441 STEEL PEDESTRIAN OVER PASS						

SPAN DATA

CODE TYPE	D/A	CLASS	LIVE LOAD T	L	M	SPAN LENGTH	DFM	DFV	DFD	NPL	WDLNC	WDLC	WSWK	EBEAM X 10^6	WT.BM.	ALLOW. STRESS STEEL	CONC.	WT.BM. MAT'L.	TYPE STEEL
RP		HS0.0		1		90.000	1.273	1.429	.800	3	.389		.298	29.00				490	441

1 = ANALYSIS (D/A) 1 = SKIP (T, L, M)
BLANK = DESIGN (D/A)

CONCENTRATED LOADS (LIMIT 40)

		X1	P1	X2	P2	X3	P3	X4	P4
2	1	22.500	1.000	45.000	1.000	67.500	1.000		
2	2								
2	3								
2	4								

CODE: TYPE
RB – ROLLED BEAM
RP – ROLLED W/PLATE
CB – COMPOSITE ROLLED
PG – PLATE GIRDER
CG – COMPOSITE GIRDER
TB – CONCRETE BEAM

STEEL BEAM DATA

ROLLED BEAM: BEAM 1 DEPTH & WEIGHT		BEAM 2 DEPTH & WEIGHT		P	NP	NON-STANDARD BEAM: SECTION PROPERTIES I_o IN.^4	YTOP	YBOT.	PLATE GIRDER: WEB DEPTH	WEB THICK.	TOP FLANGE WIDTH	TOP FLANGE THICK.	BOTTOM FLANGE WIDTH	BOTTOM FLANGE THICK.	CONW	CONT
36	WF	135	WF		1											

1 = CONSTANT THICKNESS (T) WIDTH (W)

COMPOSITE SLAB: EFFECTIVE WIDTH	THICK.	COPING	SHEAR CONN. ΣZr	SU	N ES/EC	BOTTOM COVER PLATE: X-BEG.	THICK.	WIDTH	LENGTH	TOP COVER PLATE: X-BEG.	THICK.	WIDTH	LENGTH
							50.00						

P = 1 DESIGN WITH PL's
N.P. = 1 DESIGN WITHOUT PL's

CONCRETE BEAM DATA (T, RECT., FLAT SLAB)

"N" TEN.	COM.	NO. ROWS	BEAM (WEB) IN. WIDTH	ΔW	DEPTH	ΔD	'T' SLAB WIDTH	THICK.	COMPRESSION ST. NO.	SIZE	Δ	DIST.	ROW ONE NO.	SIZE	Δ	DIST.	ROW TWO NO.	SIZE	Δ	DIST.

ROW THREE NO.	SIZE	Δ	DIST.	ROW FOUR NO.	SIZE	Δ	DIST.	ROW FIVE NO.	SIZE	Δ	DIST.	ROW SIX NO.	SIZE	Δ	DIST.	ROW SEVEN NO.	SIZE	Δ	DIST.	ROW EIGHT NO.	SIZE	Δ	DIST.	ROW NINE NO.	SIZE	Δ	DIST.

DIMENSIONS

LENGTH – FT.
WDLNC – K/FT.
WDLC – K/FT.
WT. BM. – K/FT.
COPING – IN.
AL. STRESS – K.S.I.
WT. BM. MAT'L. – PCF
WSWK – K/FT.
X_n – FT.
P_n – KIPS.
TYPE STEEL – 572, 588
DEPTH – IN.
THICK. – IN.
WEIGHT – LBS.
YTOP – IN.
ΣZ_r – K/ROW
X-BEG. – FT.
WIDTH – IN.
YBOT. – IN.
SU – K/EA.
SIZE – BAR SIZE (#4, #10, etc.)
Δ – INCREMENT (NO. OF BARS)
DIST. – IN.

10-15-70
STATE HIGHWAY DEPARTMENT OF GEORGIA
BRIDGE DIVISION

SIMPLE SPAN INPUT DATA PROBLEM NUMBER RP-3

02/03/71 USING 36WF135 AS FIRST TRIAL FIND BEAM WITH PLATES ANDCONT

BEAM W/O PLATES A441 STEEL PEDESTRIAN OVER PASS

SPAN DATA

BEAM	D/A	L.L.C.	T L M	LENGTH	D.F.M.	D.F.V.	D.F.D.	NPL
RP	0	HS 0	0 0 1	90.000	1.273	1.429	0.800	3

WDLNC	WDLC	SWLL	E	W BM	FS	FC	WG	TYPE STEEL
0.389	0.0	0.298	29.00	0.0	0.0	0.0	0.490	441

CONCENTRATED LOADS

X1	P1	X2	P2	X3	P3	X4	P4
22.500	1.000	45.000	1.000	67.500	1.000	0.0	0.0

BEAM DATA

ROLLED		SECTION PROPERTIES			PLATE GIRDER WEB		TOP FLANGE		BOTTOM FLANGE	
BEAM	P NP	I	Y TOP	Y BOT	D	T	W	T	W	T
36WF135	0 1	0.0	0.0	0.0	0.0	0.0	0.0	0.0	0.0	0.0

OWF 0

BOTTOM COVER PLATE				TOP COVER PLATE				CONSTANT	
X-BEGIN	THICKNESS	WIDTH	LENGTH	X-BEGIN	THICKNESS	WIDTH	LENGTH	W	T
0.0	0.5000	0.0	0.0	0.0	0.0	0.0	0.0	0	0

SIMPLE SPAN OUTPUT DATA PROBLEM NUMBER RP-3

BEAM PROPERTIES

BEAM	AREA	DEPTH	FL. W	FL. T	WEB T	I
36WF135	39.800	35.550	11.945	0.794	0.598	7820.0

COVER PLATES

BOTTOM COVER PLATE				TOP COVER PLATE			
X-BEGIN	THICKNESS	WIDTH	LENGTH	X-BEGIN	THICKNESS	WIDTH	LENGTH
11.19	0.9375	10.50	67.63	11.19	0.9375	10.50	67.63

BEAM WITH PLATES PROPERTIES

AREA	Y-TOP	Y-BOTTOM	I	MIN TERMINAL WELD
59.487	18.712	18.712	14374.1	6/16

SIMPLE SPAN OUTPUT DATA PROBLEM NUMBER RP-3

MOMENTS (K-FT.) AT SPAN 1/20 POINTS

SP	GIRDER	P-LOAD	NON-C.	TOT.NC	COMP.	SIDEWK	LIVE LOAD	RR-I
1	36.2	6.8	74.8	117.7	0.0	57.3	0.0 M	0.0
2	69.6	13.5	141.8	224.9	0.0	108.6	0.0 M	0.0
3	100.1	20.3	200.9	321.2	0.0	153.9	0.0 M	0.0
4	126.7	27.0	252.1	405.8	0.0	193.1	0.0 M	0.0
5	149.2	33.8	295.4	478.3	0.0	226.3	0.0 M	0.0
6	167.6	36.0	330.8	534.4	0.0	253.4	0.0 M	0.0
7	181.9	38.3	358.4	578.6	0.0	274.6	0.0 M	0.0
8	192.1	40.5	378.1	610.8	0.0	289.7	0.0 M	0.0
9	198.3	42.8	389.9	631.0	0.0	298.7	0.0 M	0.0
10	200.3	45.0	393.9	639.2	0.0	301.7	0.0 M	0.0

STRESS (PSI) AT SPAN 1/20 POINTS

	MINIMUM STRESS		MAXIMUM STRESS			ALLOWABLE	R FACTOR	
SP	TOP-S	BOT-S	TOP-C	TOP-S	BOT-S	FS	TOP-S	BOT-S
1	3211	-3211	0	4775	-4775	27000	0.673	0.673
2	6133	-6133	0	9096	-9096	27000	0.674	0.674
3	5018	-5018	0	7422	-7422	25000	0.676	0.676
4	6338	-6338	0	9355	-9355	25000	0.678	0.678
5	7472	-7472	0	11007	-11007	25000	0.679	0.679
6	8349	-8349	0	12308	-12308	25000	0.678	0.678
7	9038	-9038	0	13327	-13327	25000	0.678	0.678
8	9541	-9541	0	14066	-14066	25000	0.678	0.678
9	9856	-9856	0	14522	-14522	25000	0.679	0.679
10	9985	-9985	0	14698	-14698	25000	0.679	0.679

SHEARS (KIPS) AT SPAN 1/20 POINTS RP-3

SP	GIRDER	P-LOAD	NON-C.	TOT.NC	COMP.	SIDEWK	LIVE LOAD	RR-I
0	8.3	1.5	17.5	27.3	0.0	13.4	0.0 M	0.0
1	7.7	1.5	15.8	25.0	-0.0	12.1	0.0 M	0.0
2	7.1	1.5	14.0	22.6	-0.0	10.9	0.0 M	0.0
3	6.4	1.5	12.3	20.1	-0.0	9.7	0.0 M	0.0
4	5.5	1.5	10.5	17.5	-0.0	8.6	0.0 M	0.0
5	4.5	1.5	8.8	14.8	-0.0	7.5	0.0 M	0.0
6	3.6	0.5	7.0	11.1	-0.0	6.6	0.0 M	0.0
7	2.7	0.5	5.3	8.5	-0.0	5.7	0.0 M	0.0
8	1.8	0.5	3.5	5.8	-0.0	4.8	0.0 M	0.0
9	0.9	0.5	1.8	3.2	-0.0	4.1	0.0 M	0.0
10	0.0	0.5	-0.0	0.5	-0.0	3.4	0.0 M	0.0

	DEAD LOAD DEFLECTIONS (INCHES)					SHEAR	
SP	GIRDER	P-LOAD	NON-C.	TOT.NC	COMP.	RANGE(KIPS)	CON.SPAC(IN)
0	0.0	0.0	0.0	0.0	0.0	13.4	0.0
1	0.116	0.025	0.230	0.371	-0.0	12.1	0.0
2	0.227	0.048	0.449	0.724	-0.0	11.0	0.0
3	0.329	0.070	0.651	1.049	-0.0	10.0	0.0
4	0.422	0.090	0.835	1.347	-0.0	9.1	0.0
5	0.505	0.108	0.999	1.611	-0.0	8.4	0.0
6	0.575	0.123	1.137	1.835	-0.0	7.8	0.0
7	0.632	0.135	1.248	2.015	-0.0	7.3	0.0
8	0.673	0.144	1.329	2.145	-0.0	7.0	0.0
9	0.698	0.149	1.378	2.225	-0.0	6.8	0.0
10	0.706	0.151	1.395	2.252	-0.0	6.7	0.0

LIVE LOAD DEFLECTIONS (INCHES)

TRUCK	LANE	MILITARY	RAILROAD	SIDEWALK	L/1000
0.0	0.0	0.0	0.0	1.068	1.080

SIMPLE SPAN OUTPUT DATA PROBLEM NUMBER RP-3

BEAM PROPERTIES

BEAM	AREA	DEPTH	FL. W	FL. T	WEB T	I
36WF230	67.700	35.880	16.471	1.260	0.761	15000.0

COVER PLATES

BOTTOM COVER PLATE				TOP COVER PLATE			
X-BEGIN	THICKNESS	WIDTH	LENGTH	X-BEGIN	THICKNESS	WIDTH	LENGTH
45.00	0.0	0.0	-0.0	45.00	0.0	0.0	-0.0

BEAM WITH PLATES PROPERTIES

AREA	Y-TOP	Y-BOTTOM	I	MIN TERMINAL WELD
67.700	17.940	17.940	15000.0	5/16

SIMPLE SPAN OUTPUT DATA PROBLEM NUMBER RP-3

MOMENTS (K-FT.) AT SPAN 1/20 POINTS

SP	GIRDER	P-LOAD	NON-C.	TOT.NC	COMP.	SIDEWK	LIVE LOAD	RR-I
1	44.2	6.8	74.8	125.8	0.0	57.3	0.0 M	0.0
2	83.8	13.5	141.8	239.1	0.0	108.6	0.0 M	0.0
3	118.8	20.3	200.9	339.9	0.0	153.9	0.0 M	0.0
4	149.0	27.0	252.1	428.1	0.0	193.1	0.0 M	0.0
5	174.7	33.8	295.4	503.8	0.0	226.3	0.0 M	0.0
6	195.6	36.0	330.8	562.5	0.0	253.4	0.0 M	0.0
7	211.9	38.3	358.4	608.6	0.0	274.6	0.0 M	0.0
8	223.6	40.5	378.1	642.2	0.0	289.7	0.0 M	0.0
9	230.5	42.8	389.9	663.2	0.0	298.7	0.0 M	0.0
10	232.9	45.0	393.9	671.7	0.0	301.7	0.0 M	0.0

STRESS (PSI) AT SPAN 1/20 POINTS

	MINIMUM STRESS		MAXIMUM STRESS			ALLOWABLE	R FACTOR	
SP	TOP-S	BOT-S	TOP-C	TOP-S	BOT-S	FS	TOP-S	BOT-S
1	1805	-1805	0	2628	-2628	25000	0.687	0.687
2	3431	-3431	0	4990	-4990	25000	0.688	0.688
3	4878	-4878	0	7086	-7086	25000	0.688	0.688
4	6144	-6144	0	8915	-8915	25000	0.689	0.689
5	7230	-7230	0	10478	-10478	25000	0.690	0.690
6	8072	-8072	0	11709	-11709	25000	0.689	0.689
7	8734	-8734	0	12674	-12674	25000	0.689	0.689
8	9216	-9216	0	13373	-13373	25000	0.689	0.689
9	9518	-9518	0	13805	-13805	25000	0.689	0.689
10	9640	-9640	0	13971	-13971	25000	0.690	0.690

SHEARS (KIPS) AT SPAN 1/20 POINTS RP-3

SP	GIRDER	P-LOAD	NON-C.	TOT.NC	COMP.	SIDEWK	LIVE LOAD	RR-I
0	10.3	1.5	17.5	29.4	0.0	13.4	0.0 M	0.0
1	9.3	1.5	15.8	26.6	-0.0	12.1	0.0 M	0.0
2	8.3	1.5	14.0	23.8	-0.0	10.9	0.0 M	0.0
3	7.2	1.5	12.3	21.0	-0.0	9.7	0.0 M	0.0
4	6.2	1.5	10.5	18.2	-0.0	8.6	0.0 M	0.0
5	5.2	1.5	8.8	15.4	-0.0	7.5	0.0 M	0.0
6	4.1	0.5	7.0	11.6	-0.0	6.6	0.0 M	0.0
7	3.1	0.5	5.3	8.9	-0.0	5.7	0.0 M	0.0
8	2.1	0.5	3.5	6.1	-0.0	4.8	0.0 M	0.0
9	1.0	0.5	1.8	3.3	-0.0	4.1	0.0 M	0.0
10	-0.0	0.5	-0.0	0.5	-0.0	3.4	0.0 M	0.0

	DEAD LOAD DEFLECTIONS (INCHES)					SHEAR	
SP	GIRDER	P-LOAD	NON-C.	TOT.NC	COMP.	RANGE(KIPS)	CON.SPAC(IN)
0	0.0	0.0	0.0	0.0	0.0	13.4	0.0
1	0.124	0.023	0.210	0.357	-0.0	12.1	0.0
2	0.245	0.045	0.414	0.704	-0.0	11.0	0.0
3	0.359	0.065	0.607	1.032	-0.0	10.0	0.0
4	0.464	0.085	0.784	1.332	-0.0	9.1	0.0
5	0.556	0.102	0.941	1.599	-0.0	8.4	0.0
6	0.635	0.116	1.073	1.824	-0.0	7.8	0.0
7	0.697	0.128	1.180	2.005	-0.0	7.3	0.0
8	0.743	0.136	1.257	2.137	-0.0	7.0	0.0
9	0.771	0.142	1.304	2.217	-0.0	6.8	0.0
10	0.781	0.143	1.320	2.244	-0.0	6.7	0.0

LIVE LOAD DEFLECTIONS (INCHES)

TRUCK	LANE	MILITARY	RAILROAD	SIDEWALK	L/1000
0.0	0.0	0.0	0.0	1.011	1.080

SIMPLE SPAN

10-15-70

STATE HIGHWAY DEPARTMENT OF GEORGIA
BRIDGE DIVISION

IDENTIFICATION

"CONT" TO CONTINUE REMARKS

PROG.	PROB. NO.	PROJECT NO.	COUNTY	DATE	DESIGNER	ETC.
* B04	RP-4	ANALYZE 24WF94 WITH PLATES TOP AND BOTTOM				
*						

SPAN DATA

	CODE TYPE	CODE D/A	LIVE LOAD CLASS	T	L	M	SPAN LENGTH	DFM	DFV	DFD	NPL	WDLNC	WDLC	WSWK	EBEAM X 10^6	WT.BM.	ALLOW. STRESS STEEL	ALLOW. STRESS CONC.	WT.BM. MAT'L.	TYPE STEEL
1	RP	1	HS15				40.0	1.273	1.429	8.00	3	.777	.105	.238	29.00					441

1 = ANALYSIS (D/A) 1 = SKIP (T, L, M)
BLANK = DESIGN (D/A)

CONCENTRATED LOADS (LIMIT 40)

		X1	P1	X2	P2	X3	P3	X4	P4
2	1	0.00	21.00	20.0	21.00	40.0	21.00		
2	2								
2	3								
2	4								

CODE: TYPE
RB – ROLLED BEAM
RP – ROLLED W/PLATE
CB – COMPOSITE ROLLED
PG – PLATE GIRDER
CG – COMPOSITE GIRDER
TB – CONCRETE BEAM

STEEL BEAM DATA

	ROLLED BEAM: BEAM 1 DEPTH & WEIGHT		ROLLED BEAM: BEAM 2 DEPTH & WEIGHT		P	NP	NON-STANDARD BEAM: SECTION PROPERTIES I_o IN.^4	YTOP	YBOT.	PLATE GIRDER: WEB DEPTH	WEB THICK.	TOP FLANGE WIDTH	TOP FLANGE THICK.	BOTTOM FLANGE WIDTH	BOTTOM FLANGE THICK.	CONW	CONT
3	24	WF	94	WF													

1 = CONSTANT THICKNESS (T) WIDTH (W)

	COMPOSITE SLAB: EFFECTIVE WIDTH	THICK.	COPING	SHEAR CONN. ΣZ_r	SU	N ES/EC	BOTTOM COVER PLATE X-BEG.	THICK.	WIDTH	LENGTH	TOP COVER PLATE X-BEG.	THICK.	WIDTH	LENGTH
4							30.0	1.0	7.50	340.00	30.0	1.0	7.50	340.00

P = 1 DESIGN WITH PL'S
N.P. = 1 DESIGN WITHOUT PL'S

CONCRETE BEAM DATA (T, RECT., FLAT SLAB)

"N" TEN.	"N" COM.	NO. ROWS	BEAM (WEB) IN. WIDTH	ΔW	DEPTH	ΔD	'T' SLAB WIDTH	THICK.	COMPRESSION ST. NO.	SIZE	Δ	DIST.	ROW ONE NO.	SIZE	Δ	DIST.	ROW TWO NO.	SIZE	Δ	DIST.
3																				

	ROW THREE NO.	SIZE	Δ	DIST.	ROW FOUR NO.	SIZE	Δ	DIST.	ROW FIVE NO.	SIZE	Δ	DIST.	ROW SIX NO.	SIZE	Δ	DIST.	ROW SEVEN NO.	SIZE	Δ	DIST.	ROW EIGHT NO.	SIZE	Δ	DIST.	ROW NINE NO.	SIZE	Δ	DIST.
4																												

DIMENSIONS

LENGTH – FT.
WDLNC – K/FT.
WDLC – K/FT.
WT. BM. – K/FT.
COPING – IN.
AL. STRESS – K.S.I.
WT. BM. MAT'L. – PCF
WSWK – K/FT.
X_n – FT.
P_n – KIPS.
TYPE STEEL – 572, 588
DEPTH – IN.
THICK. – IN.
WEIGHT – LBS.
YTOP – IN.
ΣZ_r – K/ROW
X-BEG. – FT.
WIDTH – IN.
YBOT. – IN.
SU – K/EA.
SIZE – BAR SIZE (#4, #10, etc.)
Δ – INCREMENT (NO. OF BARS)
DIST. – IN.

SIMPLE SPAN INPUT DATA PROBLEM NUMBER RP-4

02/03/71 ANALYZE 24WF94 WITH PLATES TOP AND BOTTOM

SPAN DATA

BEAM	D/A	L.L.C.	T L M	LENGTH	D.F.M.	D.F.V.	D.F.D.	NPL
RP	1	HS15	0 0 0	40.000	1.273	1.429	0.800	3

WDLNC	WDLC	SWLL	E	W BM	FS	FC	WG	TYPE STEEL
0.777	0.105	0.238	29.00	0.0	0.0	0.0	0.0	441

CONCENTRATED LOADS

X1	P1	X2	P2	X3	P3	X4	P4
0.0	2.100	20.000	2.100	40.000	2.100	0.0	0.0

BEAM DATA

ROLLED		SECTION PROPERTIES			PLATE GIRDER WEB		TOP FLANGE		BOTTOM FLANGE	
BEAM	P NP	I	Y TOP	Y BOT	D	T	W	T	W	T
24WF 94	0 0	0.0	0.0	0.0	0.0	0.0	0.0	0.0	0.0	0.0
OWF 0										

BOTTOM COVER PLATE				TOP COVER PLATE				CONSTANT	
X-BEGIN	THICKNESS	WIDTH	LENGTH	X-BEGIN	THICKNESS	WIDTH	LENGTH	W	T
3.00	1.0000	7.50	34.00	3.00	1.0000	7.50	34.00	0	0

SIMPLE SPAN OUTPUT DATA PROBLEM NUMBER RP-4

BEAM PROPERTIES

BEAM	AREA	DEPTH	FL. W	FL. T	WEB T	I
24WF 94	27.700	24.290	9.061	0.872	0.516	2690.0

COVER PLATES

BOTTOM COVER PLATE				TOP COVER PLATE			
X-BEGIN	THICKNESS	WIDTH	LENGTH	X-BEGIN	THICKNESS	WIDTH	LENGTH
3.00	1.0000	7.50	34.00	3.00	1.0000	7.50	34.00

BEAM WITH PLATES PROPERTIES

AREA	Y-TOP	Y-BOTTOM	I	MIN TERMINAL WELD
42.700	13.145	13.145	5089.7	7/16

SIMPLE SPAN OUTPUT DATA PROBLEM NUMBER RP-4

MOMENTS (K-FT.) AT SPAN 1/20 POINTS

SP	GIRDER	P-LOAD	NON-C.	TOT.NC	COMP.	SIDEWK	LIVE LOAD	RR-I
1	5.3	2.1	29.5	36.9	4.0	9.0	71.5 M	0.0
2	10.2	4.2	55.9	70.4	7.6	17.1	135.0 M	0.0
3	14.6	6.3	79.3	100.1	10.7	24.3	190.6 M	0.0
4	18.3	8.4	99.5	126.2	13.4	30.5	238.3 M	0.0
5	21.5	10.5	116.5	148.6	15.7	35.7	278.0 M	0.0
6	24.1	12.6	130.5	167.3	17.6	40.0	309.8 M	0.0
7	26.2	14.7	141.4	182.3	19.1	43.3	333.6 M	0.0
8	27.6	16.8	149.2	193.6	20.2	45.7	349.5 M	0.0
9	28.5	18.9	153.8	201.2	20.8	47.1	357.5 M	0.0
10	28.8	21.0	155.4	205.2	21.0	47.6	357.5 M	0.0

STRESS (PSI) AT SPAN 1/20 POINTS

	MINIMUM STRESS		MAXIMUM STRESS			ALLOWABLE	R FACTOR	
SP	TOP-S	BOT-S	TOP-C	TOP-S	BOT-S	FS	TOP-S	BOT-S
1	2217	-2217	0	6580	-6580	27000	0.337	0.337
2	2414	-2414	0	7131	-7131	25000	0.339	0.339
3	3434	-3434	0	10095	-10095	25000	0.340	0.340
4	4327	-4327	0	12657	-12657	25000	0.342	0.342
5	5092	-5092	0	14815	-14815	25000	0.344	0.344
6	5730	-5730	0	16571	-16571	25000	0.346	0.346
7	6241	-6241	0	17923	-17923	25000	0.348	0.348
8	6624	-6624	0	18873	-18873	25000	0.351	0.351
9	6880	-6880	0	19419	-19419	25000	0.354	0.354
10	7009	-7009	0	19563	-19563	25000	0.358	0.358

SHEARS (KIPS) AT SPAN 1/20 POINTS RP-4

SP	GIRDER	P-LOAD	NON-C.	TOT.NC	COMP.	SIDEWK	LIVE LOAD	RR-I
0	2.7	3.1	15.5	21.4	2.1	4.8	40.2 M	0.0
1	2.6	1.0	14.0	17.6	1.9	4.3	35.7 M	0.0
2	2.3	1.0	12.4	15.8	1.7	3.9	33.8 M	0.0
3	2.0	1.0	10.9	14.0	1.5	3.4	31.8 M	0.0
4	1.7	1.0	9.3	12.1	1.3	3.0	29.8 M	0.0
5	1.5	1.0	7.8	10.3	1.0	2.7	27.8 M	0.0
6	1.2	1.0	6.2	8.4	0.8	2.3	25.8 M	0.0
7	0.9	1.0	4.7	6.6	0.6	2.0	23.8 M	0.0
8	0.6	1.0	3.1	4.7	0.4	1.7	21.8 M	0.0
9	0.3	1.0	1.6	2.9	0.2	1.4	19.9 M	0.0
10	-0.0	1.0	-0.0	1.0	-0.0	1.2	17.9 M	0.0

	DEAD LOAD DEFLECTIONS (INCHES)					SHEAR	
SP	GIRDER	P-LOAD	NON-C.	TOT.NC	COMP.	RANGE(KIPS)	CON.SPAC(IN)
0	0.0	0.0	0.0	0.0	0.0	44.9	0.0
1	0.009	0.005	0.049	0.063	0.007	41.0	0.0
2	0.018	0.010	0.096	0.123	0.013	39.6	0.0
3	0.026	0.014	0.140	0.181	0.019	39.3	0.0
4	0.033	0.019	0.181	0.233	0.024	39.0	0.0
5	0.040	0.023	0.217	0.280	0.029	38.7	0.0
6	0.046	0.026	0.248	0.320	0.033	38.5	0.0
7	0.050	0.029	0.272	0.351	0.037	38.3	0.0
8	0.054	0.031	0.290	0.375	0.039	38.2	0.0
9	0.056	0.032	0.301	0.389	0.041	38.1	0.0
10	0.056	0.033	0.305	0.394	0.041	38.1	0.0

LIVE LOAD DEFLECTIONS (INCHES)

TRUCK	LANE	MILITARY	RAILROAD	SIDEWALK	L/1000
0.326	0.208	0.385	0.0	0.093	0.480

SIMPLE SPAN

10-15-70

STATE HIGHWAY DEPARTMENT OF GEORGIA
BRIDGE DIVISION

IDENTIFICATION

"CONT" TO CONTINUE REMARKS

	PROG.	PROB. NO.	PROJECT NO.	COUNTY	DATE	DESIGNER	ETC.
*	B04	RP-5	ANALYZE GIRDER GIVEN WEB & PLATES			RAILROAD LIVE LOAD	
*							

SPAN DATA

CODE			LIVE LOAD				SPAN LENGTH	DFM	DFV	DFD	NPL	WDLNC	WDLC	WSWK	E BEAM X 10^6	WT.BM.	ALLOW. STRESS		WT.BM. MAT'L.	TYPE STEEL
	TYPE	D/A	CLASS	T	L	M											STEEL	CONC.		
1	RP	1	RR72				68.000	1.000	.477	1.000	4	.777	.105		29.00	.245	27.00		490	572

1 = ANALYSIS (D/A) 1 = SKIP (T, L, M)
BLANK = DESIGN (D/A)

CONCENTRATED LOADS (LIMIT 40)

	X1	P1	X2	P2	X3	P3	X4	P4
2 1	0	1.680	22.000	.500	44.000	.500	68.000	1.680
2 2								
2 3								
2 4								

CODE: TYPE
RB – ROLLED BEAM
RP – ROLLED W/PLATE
CB – COMPOSITE ROLLED
PG – PLATE GIRDER
CG – COMPOSITE GIRDER
TB – CONCRETE BEAM

STEEL BEAM DATA

ROLLED BEAM						NON-STANDARD BEAM			PLATE GIRDER							
BEAM 1		BEAM 2		P	NP	SECTION PROPERTIES			WEB		TOP FLANGE		BOTTOM FLANGE		CONW	CONT
DEPTH & WEIGHT		DEPTH & WEIGHT				I_o IN.^4	YTOP	YBOT.	DEPTH	THICK.	WIDTH	THICK.	WIDTH	THICK.		
3	WF		WF			31104.0	36.000	36.000								

1 = CONSTANT THICKNESS (T)
WIDTH (W)

COMPOSITE SLAB			SHEAR CONN.		N	BOTTOM COVER PLATE				TOP COVER PLATE			
EFFECTIVE WIDTH	THICK.	COPING	ΣZ_r	SU	ES/EC	X-BEG.	THICK.	WIDTH	LENGTH	X-BEG.	THICK.	WIDTH	LENGTH
4						0.00	1.500	18.00	68.000	0.00	1.500	18.00	68.000

P = 1 DESIGN WITH PL'S
N.P. = 1 DESIGN WITHOUT PL'S

CONCRETE BEAM DATA (T, RECT., FLAT SLAB)

"N"		NO.	BEAM (WEB) IN.				'T' SLAB		COMPRESSION ST.				ROW ONE				ROW TWO			
TEN.	COM.	ROWS	WIDTH	ΔW	DEPTH	ΔD	WIDTH	THICK.	NO.	SIZE	Δ	DIST.	NO.	SIZE	Δ	DIST.	NO.	SIZE	Δ	DIST.
3																				

ROW THREE				ROW FOUR				ROW FIVE				ROW SIX				ROW SEVEN				ROW EIGHT				ROW NINE			
NO.	SIZE	Δ	DIST.	NO.	SIZE	Δ	DIST.	NO.	SIZE	Δ	DIST.	NO.	SIZE	Δ	DIST.	NO.	SIZE	Δ	DIST.	NO.	SIZE	Δ	DIST.	NO.	SIZE	Δ	DIST.
4																											

LENGTH – FT.
WDLNC – K/FT.
WDLC – K/FT.
WT. BM. – K/FT.

COPING – IN.
AL. STRESS – K.S.I.
WT. BM. MAT'L. – PCF
WSWK – K/FT.
X_n – FT.

DIMENSIONS
P_n – KIPS.
TYPE STEEL – 572, 588
DEPTH – IN.
THICK. – IN.

WEIGHT – LBS.
YTOP – IN.
ΣZ_r – K/ROW
X-BEG. – FT.
WIDTH – IN.

YBOT. – IN.
SU – K/EA.
SIZE – BAR SIZE (#4, #10, etc.)
Δ – INCREMENT (NO. OF BARS)
DIST. – IN.

SIMPLE SPAN INPUT DATA PROBLEM NUMBER RP-5

02/03/71 ANALYZE GIRDER GIVEN WEB & PLATES RAILROAD LIVE LOAD

SPAN DATA

BEAM	D/A	L.L.C.	T L M	LENGTH	D.F.M.	D.F.V.	D.F.D.	NPL
RP	1	RR72	0 0 0	68.000	1.000	0.477	1.000	4

WDLNC	WDLC	SWLL	E	W BM	FS	FC	WG	TYPE STEEL
0.777	0.105	0.0	29.00	0.245	27.00	0.0	0.490	572

CONCENTRATED LOADS

X1	P1	X2	P2	X3	P3	X4	P4
0.0	1.680	22.000	0.500	44.000	0.500	68.000	1.680

BEAM DATA

ROLLED			SECTION PROPERTIES			PLATE GIRDER WEB		TOP FLANGE		BOTTOM FLANGE	
BEAM	P	NP	I	Y TOP	Y BOT	D	T	W	T	W	T
OWF	0 0 0		31104.0	36.000	36.000	0.0	0.0	0.0	0.0	0.0	0.0
OWF	0										

BOTTOM COVER PLATE				TOP COVER PLATE				CONSTANT	
X-BEGIN	THICKNESS	WIDTH	LENGTH	X-BEGIN	THICKNESS	WIDTH	LENGTH	W	T
0.0	1.5000	18.00	68.00	0.0	1.5000	18.00	68.00	0	0

SIMPLE SPAN OUTPUT DATA PROBLEM NUMBER RP-5

BEAM PROPERTIES

BEAM	AREA	DEPTH	FL. W	FL. T	WEB T	I
OWF 0	72.000	72.000	0.0	0.0	0.0	31104.0

COVER PLATES

BOTTOM COVER PLATE				TOP COVER PLATE			
X-BEGIN	THICKNESS	WIDTH	LENGTH	X-BEGIN	THICKNESS	WIDTH	LENGTH
0.0	1.5000	18.00	68.00	0.0	1.5000	18.00	68.00

BEAM WITH PLATES PROPERTIES

AREA	Y-TOP	Y-BOTTOM	I	MIN TERMINAL WELD
126.000	37.500	37.500	104044.5	9/16

SIMPLE SPAN OUTPUT DATA PROBLEM NUMBER RP-5

MOMENTS (K-FT.) AT SPAN 1/20 POINTS

SP	GIRDER	P-LOAD	NON-C.	TOT.NC	COMP.	SIDEWK	LIVE LOAD	RR-I
1	47.1	1.7	85.3	134.2	11.5	0.0	600.6 R	286.5
2	89.2	3.5	161.7	254.4	21.8	0.0	1093.8 R	521.8
3	126.4	5.3	229.0	360.7	31.0	0.0	1533.3 R	731.4
4	158.6	7.0	287.4	453.0	38.8	0.0	1910.9 R	911.5
5	185.9	8.7	336.8	531.4	45.5	0.0	2236.0 R	1066.6
6	208.2	10.5	377.2	595.9	51.0	0.0	2471.2 R	1178.8
7	225.5	11.3	408.7	645.5	55.2	0.0	2665.2 R	1271.3
8	237.9	11.4	431.1	680.4	58.3	0.0	2800.5 R	1335.8
9	245.3	11.4	444.6	701.4	60.1	0.0	2882.8 R	1375.1
10	247.8	11.5	449.1	708.4	60.7	0.0	2922.3 R	1393.9

STRESS (PSI) AT SPAN 1/20 POINTS

	MINIMUM STRESS			MAXIMUM STRESS		ALLOWABLE	R FACTOR	
SP	TOP-S	BOT-S	TOP-C	TOP-S	BOT-S	FS	TOP-S	BOT-S
1	630	-630	0	4466	-4466	27000	0.141	0.141
2	1194	-1194	0	8182	-8182	27000	0.146	0.146
3	1693	-1693	0	11488	-11488	27000	0.147	0.147
4	2127	-2127	0	14334	-14334	27000	0.148	0.148
5	2495	-2495	0	16779	-16779	27000	0.149	0.149
6	2797	-2797	0	18584	-18584	27000	0.151	0.151
7	3030	-3030	0	20056	-20056	27000	0.151	0.151
8	3194	-3194	0	21084	-21084	27000	0.152	0.152
9	3293	-3293	0	21708	-21708	27000	0.152	0.152
10	3326	-3326	0	21994	-21994	27000	0.151	0.151

SHEARS (KIPS) AT SPAN 1/20 POINTS RP-5

SP	GIRDER	P-LOAD	NON-C.	TOT.NC	COMP.	SIDEWK	LIVE LOAD	RR-I
0	14.6	2.2	26.4	43.2	3.6	0.0	194.1 R	92.6
1	13.1	0.5	23.8	37.4	3.2	0.0	176.6 R	84.3
2	11.7	0.5	21.1	33.3	2.9	0.0	160.9 R	76.7
3	10.2	0.5	18.5	29.2	2.5	0.0	145.8 R	69.5
4	8.7	0.5	15.9	25.1	2.1	0.0	131.0 R	62.5
5	7.3	0.5	13.2	21.0	1.8	0.0	116.7 R	55.7
6	5.8	0.5	10.6	16.9	1.4	0.0	103.1 R	49.2
7	4.4	0.0	7.9	12.3	1.1	0.0	90.3 R	43.1
8	2.9	0.0	5.3	8.2	0.7	0.0	77.5 R	37.0
9	1.5	0.0	2.6	4.1	0.4	0.0	65.7 R	31.3
10	0.0	0.0	0.0	0.0	0.0	0.0	54.4 R	25.9

	DEAD LOAD DEFLECTIONS (INCHES)					SHEAR	
SP	GIRDER	P-LOAD	NON-C.	TOT.NC	COMP.	RANGE(KIPS)	CON.SPAC(IN)
0	0.0	0.0	0.0	0.0	0.0	194.1	0.0
1	0.011	0.001	0.020	0.031	0.003	176.6	0.0
2	0.021	0.001	0.039	0.061	0.005	160.9	0.0
3	0.031	0.001	0.057	0.090	0.008	145.8	0.0
4	0.041	0.002	0.074	0.116	0.010	131.0	0.0
5	0.049	0.002	0.088	0.139	0.012	116.7	0.0
6	0.056	0.003	0.101	0.159	0.014	103.1	0.0
7	0.061	0.003	0.111	0.175	0.015	90.3	0.0
8	0.065	0.003	0.118	0.186	0.016	77.5	0.0
9	0.068	0.003	0.122	0.193	0.017	65.7	0.0
10	0.068	0.003	0.124	0.195	0.017	54.4	0.0

LIVE LOAD DEFLECTIONS (INCHES)

TRUCK	LANE	MILITARY	RAILROAD	SIDEWALK	L/ 640
0.0	0.0	0.0	1.191	0.0	1.275

IV. COMPOSITE ROLLED BEAM (CB)

INPUT DATA

A Composite rolled Beam is any standard 18 through 36 inch depth wide flange section with a composite concrete slab on top and optional cover plates top and bottom. Section properties (area, depth, flange width and thickness, web thickness, and moment of inertia) of all 18, 21, 24, 27, 30, 33 and 36 inch depth wide flange sections are available in the program.

A. IDENTIFICATION (* in c.c. 1).

The IDENTIFICATION lines are used to supply any pertinent information about the bridge that the engineer wishes to head the output listing. The project number, county, date, and the designer's name or initials should always be given. Card columns 2-4 of the first line are reserved for the program number.

Card columns 5-8 of the first line are reserved for the problem number. This space is always left blank by the Engineer since the problem number is assigned from the log book of the Bridge Division computer problems. The problem number is associated with any error messages and appears on the output listing.

Any number of IDENTIFICATION lines may be used to enter remarks, etc. Whenever more than one line (card) is used, the code "CONT" must be entered in card columns 65-68 of all lines (cards), except the last line, to indicate to the program that another IDENTIFICATION card will follow. If only one line (card) of IDENTIFICATION is used, "CONT" is not required.

B. SPAN DATA (1 in c.c. 1).

The SPAN DATA card gives information relating to the span, generally without regard to the type of beam under consideration. The digit one (1) in card column one is used for identification and is of no significance to the Engineer.

1. CODE (c.c. 2-4) Form: CBX

   a. TYPE (c.c. 2,3) Form: CB

      Enter the TYPE of beam in card columns 2, 3. "CB" defines a Composite rolled Beam with or without cover plates. The rolled beam must be a standard 18, 21, 24, 27, 30, 33 or 36 inch depth wide flange section in a design problem.

   b. D/A (c.c. 4) Form: X (blank or 1).

      The digit one (1) indicates that a given section is to be analyzed and, a blank (or zero) indicates that the beam is to be designed (determined). Any other character is illegal.

2. LIVE LOAD (c.c. 5-11). This input data defines the class of live load and the various loads that are to be omitted. The live load is considered acting on the composite section.

   a. CLASS (c.c. 5-8)

      The LIVE LOAD CLASS is entered in card columns 5-8, i.e., HS20, H 15, RR80, etc. Following are the live loads considered by the program.

      HS20* (AASHO designation HS20-44)

      HS15 (AASHO designation HS15-44)

      H 20 (AASHO designation H20-44)

      H 15 (AASHO designation H15-44)

      H 10 (AASHO designation H10-44)

      (*This number can be increased or decreased by any amount to check the overstress provisions of the AASHO Specifications.)

The program uses 80% of the input value for the largest wheel load. Uniform lane load and concentrated lane loads are proportioned accordingly. Moments are computed with the wheel loads adjusted by impact and the distribution factor for moments (DFM). For the end reaction, the wheel at the support is adjusted by the impact factor and the distribution factor for shear (DFV). Intermediate shear values are computed with the wheel loads adjusted by the impact factor for the loaded span and the distribution factor for moments. Deflections are a function of the wheel loads adjusted by the impact factor and the distribution factor for deflections (DFD).

Railroad live loads:

RR80 (AREA Cooper E 80 load).

RR72 (AREA Cooper E 72 load).

RR** (AREA Cooper E ** load).

The program computes the moments, shears, and approximates the deflection for one rail adjusted by impact and distribution factors using one-half of the input value (80, 72, etc.) as the largest wheel load.

b. T (c.c. 9) Form: X (blank or 1).

The truck live load can be eliminated from consideration by entering the digit one (1) in card column 9 when using a standard highway loading. Leave blank if truck loading is to be considered.

c. L (c.c. 10) Form: X (blank or 1).

The lane live load can be eliminated from consideration by entering the digit one (1) in card column 10 when using a standard highway loading. Leave blank if lane loading is to be considered.

d. M (c.c. 11) Form: X (blank or 1).

The military live load can be eliminated from consideration by entering the digit one (1) in card column 11 when using a standard highway loading. Leave blank if military loading is to be considered.

Sidewalk live load only can be achieved by placing 111 in T, L, M, (c.c. 9, 10, 11) with a standard highway load. This eliminates the truck lane, and military from consideration leaving the sidewalk load as the only live load when computing moments, stresses, shears and deflections.

The omission of truck, lane, and military live load has no meaning when railroad live load is designated.

3. LENGTH (c.c. 12-17) Form: XXX.XXX feet.

LENGTH is the design span length in feet from center line of bearing to center line of bearing.

4. DFM (c.c. 18-21) Form: X.XXX ratio.

DFM, the distribution factor for moments, is the proportion of one row of wheels for highway and railroad loadings acting on the beam for moment and intermediate shear. This factor must always be greater than zero.

5. DFV (c.c. 22-25) Form: X.XXX ratio.

DFV, the distribution factor for end shear, is the proportion of one wheel on the beam at the end support for highway live load. When railroad live load is indicated, DFV is the amount the loads are increased for impact.

6. DFD (c.c. 26-29) Form: X.XXX ratio.

DFD, the distribution factor for deflections, is the proportion of one row of wheels for highway and railroad live loadings acting on the beam for calculating live load deflections. DFD is completely independent of DFM or DFV.

7. NPL (c.c. 30, 31) Form: XX (1-40).

NPL is the number of concentrated loads in the span.

A maximum of forty is available.

8. WDLnc (c.c. 32-35) Form: X.XXX kips per foot.

WDLnc is the weight of the uniform non-composite dead load (slab, coping, etc.) in kips per foot. The weight of the beam normally should not be included.

9. WDLc (c.c. 36-39) Form: X.XXX kips per foot.

WDLc is the weight of the uniform composite dead load (curb, handrail, utilities, future paving, future construction, etc.) in kips per foot. The N value used to convert the concrete to an equivalent steel area for this load is three times that used for the live load. Any composite concentrated loads must be included in this load.

10. WSWK (c.c. 40-43) Form: X.XXX kips per foot.

WSWK is the uniform sidewalk live load in kips per foot. The deflection resulting from this load is added to the highway (H, HS) or railroad (RR) live load deflections when checking to see if the allowable live load deflection (L/1000) is exceeded. It is assumed that the maximum sidewalk deflection and the maximum highway or railroad deflection would be coincidental.

11. E BEAM X 10^6 (c.c. 44-47) Form: XX.XX mpsi.

This is the Modulus of Elasticity of the beam material in million pounds

per square inch, and is used in computing deflections. If a value of E equal to zero (0) is entered or this data field is left blank, the program will by-pass all computations for deflections.

12. WT.BM. (c.c. 48-51) Form: X.XXX kips per foot.

This is the uniform weight of the non-standard beam specified in "SECTION PROPERTIES", and is not used with a WF Composite rolled Beam. If a non-standard section is analyzed (Section Properties are given), the beam weight should be given here or included in WDLnc. The area of the beam is determined from the weight.

13. ALLOWABLE STRESS (c.c. 52-59)

a. STEEL (c.c. 52-55) Form: XX.XX ksi.

STEEL is the allowable stress in ksi in the beam to determine which grade of A572 to consider, or the ALLOWABLE STRESS for other grades or metals. If this is left blank TYPE STEEL will govern the allowable stress. The Allowable stress is not required for A36, A441, or A588 types of steel.

b. CONC (c.c. 56-59) Form: X.XXX ksi.

This is the allowable stress in ksi in the concrete. If this data is blank (or zero) a value of 1.200 ksi is used.

14. WT.BM.MAT'L (c.c. 60-62) Form: XXX pounds per cu.ft.

This is the weight of the beam material in pounds per cubic foot. This data is required for the Composite rolled Beam (CB) with or without plates span if the plates weight other than 490 pounds per cubic foot.

15. TYPE STEEL (c.c. 63-65) Form: XXX (36,441, etc.)

The program has provisions to use A36 (enter 36), A441 (enter 441),

A588 (enter 588), A572 (enter 572), or A514 (enter 514). When type A572 is used the ALLOW. STRESS (STEEL card columns 52-55) must be given to show which grade is to be considered. If STEEL (c.c. 52-55) and TYPE STEEL (c.c. 63-65)are both blank, type A36 steel allowable stresses are used.

C. CONCENTRATED LOADS (2 in c.c. 1)

Card columns one and two are used to keep the cards in sequence and contain 21, 22, 23, etc.to 30. The input data form shows two cards (the program has provisions for ten). When necessary, write between the lines or attach extra forms to provide space for the required CONCENTRATED LOADS.

1. Xn (c.c. 3-8, 15-20, 27-32, 39-44) Form: XXX.XXX feet.

   Xn is the distance in feet from the left support to the concentrated load (diaphragm, handrail post, utility pole, sign, etc.)Pn. The maximum number of loads is forty. The distance may or may not be of increasing magnitude from the left support.

2. Pn (c.c. 9-14, 21-26,33-38, 45-50) Form: XXX.XXX kips.

   Pn is the concentrated load in kips.

D. STEEL BEAM DATA (3 in c.c. 1)

1. ROLLED BEAM (c.c. 2-17) (BEAMS 1 & 2) Form: XXWFXXX & XXWFXXX

   This data must be given for an analysis (D/A=1) problem. These fields (DEPTH, WEIGHT) determine the option used for a design (D/A=0) problem. All design options use the following procedure to determine the size of the bottom plate required. The dimension in "BOTTOM COVER PLATE", "WIDTH" (card columns 36-39 card number 4) is checked to see if the Engineer has set the maximum plate width. When this "WIDTH" is zero

(blank) the program computes a narrow plate with a width equal to the flange width minus 1½" (±). This narrow plate is incremented from 5/16" in thickness in 1/16" increments until a workable solution is found or 1½ times the flange thickness is exceeded. When a workable solution is not found, the plate width is increased to at least 3" wider than the flange width. This wide plate is then incremented from 5/16" in 1/16" increments until a workable solution is found or 1½ times the flange thickness is exceeded. When a workable solution is not found the next heavier beam in the same series or the lightest beam of the next deeper series is tried and the incremental process is repeated. When a workable solution is found with a plate that has a thickness less than minimum, the plate width is decremented in ½" decrements until the thickness is incremented to the minimum or a zero width is reached. If a plate less than 4" wide is necessary the next heavier beam in the same series or the lightest beam of the next deeper series is tried in the same manner. The first composite beam and plate combination found that will support the specified loading conditions without exceeding the allowable stress, deflection, or thickness requirements is presented in the output.

When a composite rolled beam design (D/A=0) without a bottom cover plate is desired, input the "BOTTOM COVER PLATE", "WIDTH" (card columns 36-39 card number 4) as 0.01 inch. This compels the program to select a new beam rather than increment the bottom cover plate.

The design process does not change the dimensions of the top cover

plate. The purpose of this is to let the Engineer use a top plate if one is needed and let the program handle the usual case of the bottom plate only.

a. DEPTH (c.c. 2,3, and 9, 10) Form: XX (00,18,21,...36)

The DEPTH must be given for an analysis (D/A=1) problem. The DEPTH and WEIGHT control the three options which determine the first trial beam used in a design (D/A=0) problem.

Option 1. The DEPTH is given as zero and the WEIGHT must also be zero (blanks are not allowed). The program uses the span length in inches divided by 25 to determine the minimum nominal depth WF rolled steel shape to consider. The lightest beam in this series is used for the first trial design.

Option 2. The DEPTH is given as 18, 21 , 111 or 36 and the WEIGHT is defined as zero (blank). The program adds a plate to the lightest beam with this nominal depth for the first trial design.

Option 3. The DEPTH is given as 18, 21, ... or 36 and the WEIGHT is also given. The program adds a plate to this beam as the first trial design.

b. WEIGHT (c.c. 6-8 and 13-15) Form: XXX pounds per foot.

WEIGHT is the weight of the rolled steel shape in pounds per foot of the beam being analyzed (D/A=1) or the first trial design beam (D/A=0) of option 3 above.

c. P (c.c. 16) Form: X (0, blank or 1)

The digit one signals the program to design BEAM 1 above with the

cover plates input in card 4. The one also tells the program to design a plate for the beam defined by BEAM 2 above. For BEAM 2, the plates sizes input in card 4 are ignored, i.e., the program selects the cover plate without the restrictions given in the Cover Plate data. (See example CB-1 on page 4-29)

d. NP (c.c. 17) Form: X (0, blank or 1)

The digit one input tells the program to design the beam options specified as BEAM 1 and BEAM 2 without plates (No Plates). (See example CB-2 on page 4-37)

Note: The P and NP codes are applicable to Beam Types "RP" and "CB" only. The two beam options are applicable to Beam Types "RB", "RP", and "CB". The BEAM 2 option is available for design only (D/A=0), i. e., only one beam can be analyzed (D/A=1) with each input form.

2. SECTION PROPERTIES (c.c. 18-35) For analysis (D/A=1) only.

SECTION PROPERTIES gives the program the capability to analyze any symmetrical section with a composite concrete slab on top, and to which cover plates (bottom and/or top) can be added to change the section as necessary i.e., a built up section can have extra plate thickness added to the top or bottom as a cover plate.

a. I_o IN.^{4} (c.c. 18-25) Form: XXXXXXX.X inches to the fourth power.

This is the moment of inertia of the symmetrical section in inches to the fourth power. The plates to be added in card 4 are <u>not</u> included in this section. The area of this section is computed from the WT.BM. (card columns 48-51) and WT.BM.MAT'L (card columns 60-62) given in card number one (1 in c.c. 1).

b. YTOP (c.c. 26-30) Form: XX.XXX inches.

YTOP is half the depth of the "non-standard" beam section

c. YBOT (c.c. 31-35) Form: XX.XXX inches.

YBOT is equal to YTOP but must be given, i.e., if a non-standard section is to be analyzed YTOP and YBOT must be greater than zero.

This is all the data necessary in this card for analyzing a composite beam (CB) made up of a symmetrical section with a composite concrete slab on top and plates top and bottom as necessary.

E. COVER PLATE DATA (4 in c.c. 1)

The program has the capability to design or analyze a beam with a composite slab, one plate on top of the beam and one plate on the bottom of the beam. The design process works on the beam and the bottom plate. The composite slab and the top plate are not changed by the design process.

1. COMPOSITE SLAB (c.c. 2-16)

The weight of the composite slab is included in WDLnc.

a. EFFECTIVE WIDTH (c.c. 2-7) Form: XXX.XXX inches.

This is the effective width of the composite slab in inches as defined by the AASHO Specifications. To achieve composite action this width must always be given greater than zero.

b. THICK (c.c. 8-12) Form: XX.XXX inches.

THICK is the thickness in inches of the composite slab. This thickness must have a value greater than zero.

c. COPING (c.c. 13-16) Form: X.XXX inches.

COPING is the distance in inches from the top of the beam to the bottom of the composite slab. COPING can be zero.

2. SHEAR CONN. (c.c. 17-24)

Shear connectors are spaced in accordance with 1969 AASHO Specifications Article 1.7.101.

a. ΣZr (c.c. 17-20) Form: XX.XX kips per row.

ΣZr is the total allowable range of horizontal shear in kips on a row of shear connectors, including fatigue considerations.

b. Su (c.c. 21-24) Form: XX.XX kips each.

Su is the ultimate strength of an individual shear connector in kips. If this data is blank or zero, a value of 1.0 is used.

3. N (Es/Ec) (c.c. 25,26) Form: XX ratio.

N is the ratio of the modulus of elasticity of steel to that of concrete. If N is zero or blank a value of 10 is used. For composite dead load (WDLc), the N factor is multiplied by three.

4. BOTTOM COVER PLATE (c.c. 27-45)

a. X-BEG (c.c. 27-30) Form: XX.XX feet.

X-BEG is the distance in feet to the beginning of the bottom plate from the left support. This distance is required for an analysis (D/A=1) problem, but is computed by the program for a design (D/A=0) problem. Therefore any data in X-BEG will be ignored in a design (D/A=0) problem. This X-BEG distance allows the Engineer to analyze a plate welded off center.

b. THICK (c.c. 31-35) Form: X.XXXX inches.

THICK is the thickness in inches of the bottom plate. This thickness is required for an analysis (D/A=1) problem, but is computed by the program for a design (D/A=0) problem. Therefore the data in THICK is used as the lower limit to control the minimum thickness of the

bottom plate in a design (D/A=0) problem. If zero or blank is input, a minimum of 5/16" is used.

c. WIDTH (c.c. 36-39) Form: XX.XX inches.

WIDTH is the width in inches of the bottom cover plate. WIDTH is required for an analysis (D/A=1) problem and can be used to limit the maximum width for a design (D/A=0) problem. When WIDTH is blank or zero for a design (D/A=0) problem the program computes a narrow plate with a width equal to the beam flange width minus 1½" (±). This narrow plate is incremented from 5/16" in thickness in 1/16" increments until a workable solution is found or 1½ times the flange thickness is exceeded. When a workable solution is not found, the plate width is increased to at least 3" wider than the beam flange width. This wide plate is then incremented from 5/16" in 1/16" increments until a workable solution is found or 1½ times the flange thickness is exceeded. If no workable solution is found the next heavier beam in the same series or the lightest beam of the next deeper series is tried in the same manner. When no satisfactory combination of plates and beam can be found "ROLLED BEAM UNAVAILABLE" is printed in the output. When a workable solution is found with a plate that has a thickness less than minimum, the plate width is decremented in ½" decrements until the thickness is incremented to minimum or a zero width is reached. If a plate less than 4" wide is necessary the next heavier beam in the same series or the lightest beam of the next deeper series is tried in the same manner. The first beam and plates combination found that

will support the specified loading conditions without exceeding the allowable stress, deflection or thickness requirements is presented in the output. When a composite rolled beam design (D/A=0) without a bottom cover plate is desired, input WIDTH as 0.01 inch. This compels the program to select a new beam rather than increment the bottom plate.

d. LENGTH (c.c. 40-45) Form: XXX.XXX feet.

LENGTH is the length in feet of the bottom plate. This length is required for an analysis (D/A=1) problem, but is computed by the program for a design (D/A=0) problem. Therefore any data in LENGTH will be ignored in a design (D/A=0) problem.

5. TOP COVER PLATE (c.c. 46-64)

A top cover plate can be used with a Composite rolled Beam problem. The dimensions of the top cover plate are not changed in the design process (D/A=0).

a. X-BEG (c.c. 46-49) Form: XX.XX feet.

X-BEG is the distance in feet to the beginning of the top plate from the left support for an analysis problem (D/A=1), or design problem (D/A=0). However, this distance is not changed in a design process.

b. THICK (c.c. 50-54) Form: X.XXXX inches.

THICK is the thickness of the top plate in inches. This thickness is required when necessary for an analysis (D/A=1) problem, but is not changed in a design (D/A=0) problem by the design process.

c. WIDTH (c.c. 55-58) Form: XX.XX inches.

WIDTH is the top cover plate width in inches of the plate being analyzed (D/A=1) and is not changed in a design (D/A=0) problem

by the design process.

d. LENGTH (c.c. 59-64) Form: XXX.XXX feet.

LENGTH is the length in feet of the plate being analyzed (D/A=1) and is not changed in a design problem (D/A=0) by the design process.

COMPOSITE ROLLED BEAM

OUTPUT DATA

A. The first page of the output listing contains the input data and should be checked to verify that the proper quantities were punched in the input data cards.

B. The second page of the output listing tabulates the BEAM PROPERTIES, COVER PLATES, BEAM WITH PLATES PROPERTIES, COMPOSITE SECTION PROPERTIES, and the NUMBER OF SHEAR CONNECTORS NEEDED TO PROVIDE FOR ULTIMATE STRENGTH.

1. BEAM PROPERTIES: (From AISC Handbook)

   a. BEAM XXWFXXX Example: 27WF 84

      Nominal depth and weight in pounds per foot of the rolled steel shape. If the problem is a design, this is the beam selected by the program.

   b. AREA is the area in square inches of the WF beam.

   c. DEPTH is the depth in inches of the WF beam.

   d. FL.W is the flange width in inches of the WF beam.

   e. FL.T is the flange thickness in inches of the WF beam.

   f. WEB T is the web thickness in inches of the WF beam.

   g. I is the moment of inertia in inches to the fourth power of the WF beam.

2. COVER PLAGES:

   a. BOTTOM COVER PLATE:

      1) X-BEGIN is the distance in feet from the left support to the beginning of the bottom cover plate. For a design problem

(D/A=0) this distance is determined by the allowable fatigue stress adjacent to or connected by fillet welds (AASHO Specifications, TENTH EDITION,*1969), or the theoretical end of the cover plate minus 1½ times the cover plate width, whichever is less.

2) THICKNESS is the thickness in inches of the bottom cover plate.

3) WIDTH is the width in inches of the bottom cover plate. If the input width is zero (blank) the program computes a narrow width (flange width minus 1½ inches) tries that width to failure then computes a wide width (flange width plus three inches).

4) LENGTH is the length in feet of the bottom cover plate. For a design problem, this distance is the length of the span minus two times X-BEGIN.

b. TOP COVER PLATE.

The top cover plate is not changed by the design process. Therefore, this information is the same as the input.

3. BEAM WITH PLATES PROPERTIES:

a. AREA is the area of steel of the combined cover plates and the beam.

b. YTOP is the distance in inches from the centroid to the extreme fiber at the top of the section with cover plates.

c. YBOT is the distance in inches from the centroid to the extreme fiber at the bottom of the section with the cover plates.

d. I is the moment of inertia in inches to the fourth power of the section with the cover plates.

*Interims 1970, 1971

e. MIN TERMINAL WELD is the minimum terminal weld size based on the stress in the bottom plate at the theoretical end, the thickness of the plate, or flange whichever produces the largest weld size. Fatigue is considered in the weld metal.

4. COMPOSITE SECTION PROPERTIES.

a. BEAM ONLY.

This tabulates the section properties of the beam and composite slab with or without the cover plates at the left end of the span.

b. BEAM WITH PLATES.

This tabulates the section properties of the beam, composite slab, and cover plates at the center line of the span.

1) N is the ratio of the modulus of elasticity of steel to that of concrete used to compute the various properties. N and 3N properties are given.

2) YTC is the distance in inches from the centroid to the extreme fiber at the top of the concrete.

3) YTS is the distance in inches from the centroid to the extreme fiber at the top of the beam or plate. If this distance is negative the neutral axis is in the concrete and the computed stresses are incorrect.

4) YBS is the distance in inches from the centroid of the beam section to the extreme fiber at the bottom of the steel section.

5) I is the moment of inertia in inches to the fourth power of the composite section.

6) Q SLAB is the moment of area of the concrete slab in inches to the third power. This is used to compute the shear connector spacing.

5. NUMBER OF SHEAR CONNECTORS NEEDED TO PROVIDE FOR ULTIMATE STRENGTH is the result of the formula:

$$N_{sc} = \frac{2P}{0.85(Su)}$$

Where P is the minimum of

$$P = As\left(\frac{Fs}{.55}\right)$$

or

$$P = 0.85\left(\frac{Fc}{0.40}\right)(B)C$$

Where Su = the ultimate strength of a shear connector.

As = the total area of steel including cover plates.

Fs = the allowable stress in the steel.

.55 = the factor converting the allowable steel stress to yield strength.

Fc = the allowable stress in the concrete.

0.40 = the factor converting the allowable concrete stress to 28 day compressive strength.

B = the effective flange width in Article 1.7.99, AASHO Specs.

C = the thickness of the concrete slab.

0.85 = a reduction factor.

See AASHO Specifications (1969) Article 1.7.101.

C. The third page of the output listing tabulates the MOMENTS (K-Ft.) and the STRESS (PSI) at the 1/20th points in the span for the left half of the span.

1. MOMENTS (K-FT.) AT SPAN 1/20 POINTS.

   a. SP lists the span points in 20ths.

   b. GIRDER lists the moments in kip-feet due to the weight of the beam and cover plates only.

   c. P-LOAD lists the moments in kip-feet due to the concentrated loads only.

   d. NON-C lists the moments in kip-feet due to the uniform non-composite dead load (WDLnc) only.

   e. TOT.NC lists the sum of the GIRDER, P-LOAD, and NON-C moments in kip-feet.

   f. COMP. lists the moments in kip-feet due to the uniform composite dead load input (WDLc) only.

   g. SIDEWK lists the moments in kip-feet due to the sidewalk live load.

   h. LIVE LOAD lists the moments in kip-feet due to the live load. Moments due to highway live loads include impact while railroad moments do not include impact. The letter code after the moment indicates the type of live load that governs as follows:

      1) T designates the moment is due to the truck live load.

      2) L designates the moment is due to the lane live load.

      3) M designates the moment is due to the military live load.

      4) R designates the moment is due to the railroad live load.

i. RR-I lists the moment in kip-feet due to railroad impact and is considered for railroad live load only.

2. STRESS (PSI) AT SPAN 1/20 POINTS.

A positive stress indicates compression. A negative stress indicates tension.

a. MINIMUM STRESS

1) SP lists the span point in 20ths.

2) TOP-S lists the minimum stress in psi at the top of the steel due to the dead loads.

3) BOT-S lists the minimum stress in psi at the bottom of the steel due to the dead loads.

b. MAXIMUM STRESS: If the problem is a design the maximum stress should not exceed the allowable stress.

1) TOP-C lists the maximum stress in psi at the top of the concrete for a composite beam.

2) TOP-S lists the maximum stress in psi at the top of the steel due to the dead and live loads.

3) BOT-S lists the maximum stress in psi at the bottom of the steel due to the dead and live loads.

c. ALLOWABLE FS lists the allowable stress in the steel (base metal) considering the type of steel and/or the beam group. Fatigue is not considered, i.e., does not govern.

d. R FACTOR

1) TOP-S lists the ratio of the minimum stress to the maximum stress at the top of the beam.

2) BOT-S lists the ratio of the minimum stress to the maximum stress at the bottom of the beam.

D. The fourth page of the output listing tabulates the SHEARS (KIPS), the DEAD LOAD DEFLECTIONS (INCHES), the SHEAR RANGE (KIPS), the SHEAR CON.SPAC (IN), and the LIVE LOAD DEFLECTIONS (INCHES).

Shear is not considered when designing a Composite Beam.

1. SHEARS (KIPS) AT SPAN 1/20 POINTS.

   a. SP lists the span point in 20ths.

   b. GIRDER lists the shears in kips due to the weight of the beam, and cover plates only.

   c. P-LOAD lists the shears in kips due to the concentrated loads only.

   d. NON-C lists the shears in kips due to the uniform non-composite dead load only (WDLc).

   e. TOT.NC lists the total of GIRDER, P-LOAD, AND NON-C.

   f. COMP. lists the shears in kips due to the uniform composite dead load only (WDLc).

   g. SIDEWK lists the maximum positive shears in kips due to the sidewalk live load.

   h. LIVE LOAD lists the maximum shears due to the standard highway or railroad live load. Shears due to highway live loads include impact while railroad shears do not include impact. The letter code after the shear value indicates the type of live load which controlled as follows:

      1) T designates the shear is due to the truck live load.

      2) L designates the shear is due to the lane live load.

      3) M designates the shear is due to the military live load.

      4) R designates the shear is due to the railroad live load.

i. RR-I lists the shears due to railroad impact and is considered with railroad live load only.

2. DEAD LOAD DEFLECTIONS (INCHES)

a. SP lists the span point in 20ths.

b. GIRDER lists the deflection in inches due to the beam and cover plates only.

c. P-LOAD lists the deflection in inches due to the concentrated loads only.

d. NON-C lists the deflection in inches due to the uniform non-composite dead load (WDLnc) only.

e. TOT.NC lists the total of GIRDER, P-LOAD, and NON-C.

f. COMP. lists the deflection due to the uniform composite dead load (WDLc) only.

3. SHEAR

a. RANGE (KIPS) lists the difference in the minimum and maximum shear envelopes (excluding dead loads). The loading condition creating the maximum positive shear is listed (T,L,M,R) under LIVE LOAD and SIDEWK. The loading condition creating the maximum negative shear is not identified. Therefore, the RANGE (KIPS) may be sidewalk combined with truck and lane, lane and military, or truck and military; depending on which loading condition results in the maximum negative shear and whether it is a different loading condition than results in the maximum positive shear.

b. CON.SPA (IN) lists the shear connector spacing in inches of one row of shear connectors. If this exceeds 24 inches (maximum allowed) the Engineer can change the number of connectors per row

and adjust the space accordingly.

4. LIVE LOAD DEFLECTIONS (INCHES)

The live load deflections take into consideration impact (50/(L+125) or 30% maximum for highway live loads and input (DFV) for railroad live loading), and the distribution factor (DFD) for deflections. If the problem is a design, the maximum-live load deflection should not exceed the allowable live load deflection.

a. TRUCK lists the maximum deflection in inches at the center line of the span due to the specified (H or HS) truck loading.

b. LANE lists the maximum deflection in inches at the center line of the span due to the specified lane loading.

c. MILITARY lists the maximum deflection in inches at the center line of the span due to the military loading.

d. RAILROAD lists the deflection in inches computed by treating the maximum distributed moment, plus impact, due to the specified railroad live load at the center line of the span as the middle ordinate of a parabolic moment diagram. The beam is loaded with the resulting M/EI diagram and the center line deflection is computed by Simpson's rule for numerical integration. The results compare favorably (conservative by about 5%) with the deflection computed by using the actual M/EI diagram for the maximum moment at the centerline of a one hundred foot span.

e. SIDEWALK lists the deflection in inches at the center line of the span due to the sidewalk live load.

f. L/800 lists the allowable deflection in inches for highway live loads as the length of the span divided by eight hundred. L/640 lists the allowable deflection in inches for railroad live loads as the length of the span divided by six hundred forty. L/1000 lists the allowable deflection in inches when the sidewalk is loaded, as the length of the span divided by one thousand.

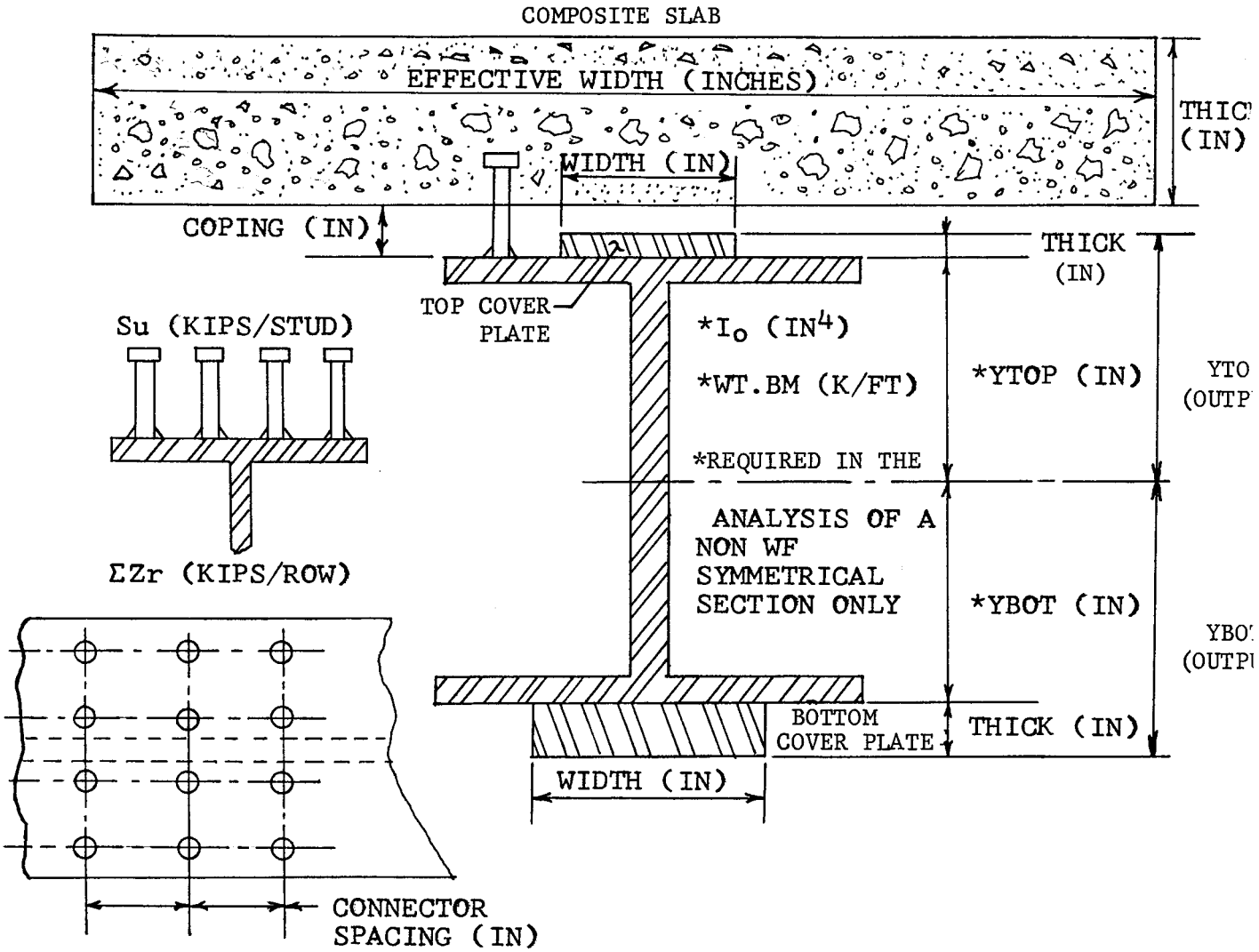

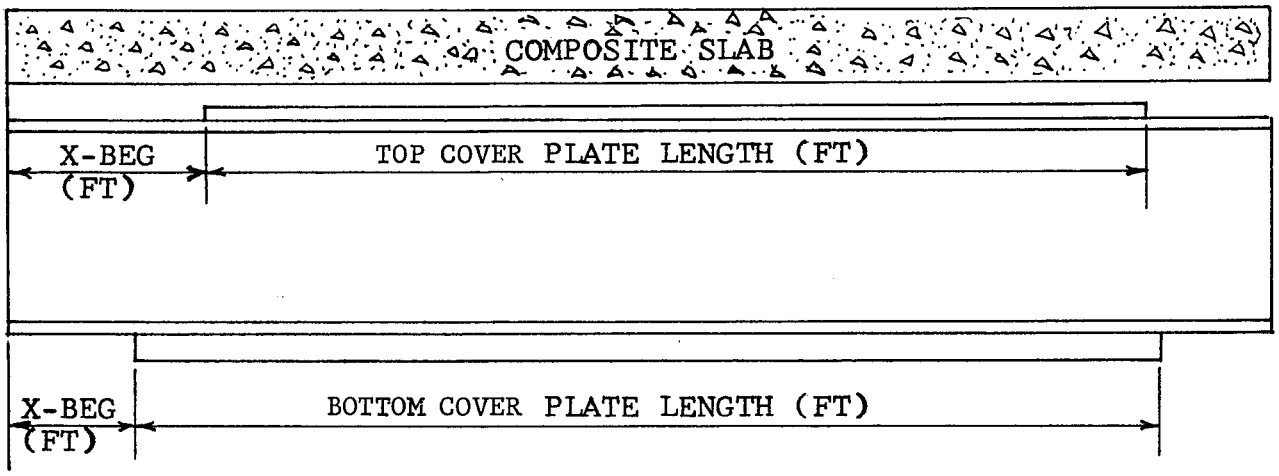

COMPOSITE ROLLED BEAM (CB)

COMPOSITE ROLLED BEAM

EXAMPLE PROBLEMS

There are five different approaches to using this program with a Composite rolled Beam.

1. Design a beam using L/25 to determine the minimum depth WF section to use for the first trial design. (See example CB-1 on page 4-29.)
2. Design a beam giving the preferred depth of the beam. (See example CB-2 on page 4-37.)
3. Design a beam giving the desired WF section. (See example CB-3 on page 4-45.)
4. Analyze a given WF beam with composite slab on the top and cover plate on the bottom. (See example CB-4 on page 4-53.)
5. Analyze a given symmetrical section with plates added top and bottom. (See example CB-5 on page 4-58.)

The following live loading conditions are explored:

1. H20 excluding military, see example CB-1 on page 4-29.
2. HS20, see example CB-2 on page 4-37.
3. HS20 excluding truck, lane, and military (sidewalk live load only), see example CB-3 on page 4-45.
4. HS15 with sidewalk, see example CB-4 on page 4-53.
5. RR80 (AREA Cooper E-80), see example CB-5 on page 4-58.

The allowable steel stresses are examined as indicated:

1. Type A36 steel, CB-1 on page 4-29 and CB-3 on page 4-45.

2. Type A441 steel, CB-2 on page 4-37.

3. Type A588 steel, CB-4 on page 4-53.

4. Type A572 steel, CB-5 on page 4-58.

The minimum plate thickness and the maximum plate width controls are illustrated in example CB-2 on page 4-37.

Two designs from one input data form:

1. With and without plates, see example CB-1 on page 4-29, and CB-3 on page 4-45.

2. Two different beams, see example CB-2 on page 4-37.

SIMPLE SPAN

IDENTIFICATION

"CONT" TO CONTINUE REMARKS

PROG.	PROB. NO.	PROJECT NO.	COUNTY	DATE	DESIGNER	ETC.	CONT
* B04	CB-1	USING L/25	FIND SHALLOWEST BEAM	H 20	LIVE LOAD	60-FT.	CONT
* SPAN WITH & WITHOUT PLATES							

SPAN DATA

CODE	TYPE	D/A	LIVE LOAD CLASS	T	L	M	SPAN LENGTH	DFM	DFV	DFD	NPL	W_{DLNC}	W_{DLC}	W_{SWK}	$E_{BEAM} \times 10^6$	WT.BM.	ALLOW. STRESS STEEL	ALLOW. STRESS CONC.	WT.BM. MAT'L.	TYPE STEEL
1	CB		H 20		1		60.0	1.455	1.455	1.000	4	.716	.265		29.00			1.200	490	36

1 = ANALYSIS (D/A) 1 = SKIP (T, L, M)
BLANK = DESIGN (D/A)

CONCENTRATED LOADS (LIMIT 40)

	X1	P1	X2	P2	X3	P3	X4	P4
2 1	0.00	1.680	20.0	21.00	60.0	1.680	40.0	21.00
2 2								
2 3								
2 4								

CODE: TYPE
RB – ROLLED BEAM
RP – ROLLED W/PLATE
CB – COMPOSITE ROLLED
PG – PLATE GIRDER
CG – COMPOSITE GIRDER
TB – CONCRETE BEAM

STEEL BEAM DATA

ROLLED BEAM: BEAM 1 DEPTH & WEIGHT	BEAM 2 DEPTH & WEIGHT	P	NP	NON-STANDARD BEAM: SECTION PROPERTIES I_o IN.^{4}	Y_{TOP}	$Y_{BOT.}$	PLATE GIRDER: WEB DEPTH	WEB THICK.	TOP FLANGE WIDTH	TOP FLANGE THICK.	BOTTOM FLANGE WIDTH	BOTTOM FLANGE THICK.	CONT. W	CONT. T
3 0.0 WF 0.0.0	WF		1											

1 = CONSTANT THICKNESS (T) WIDTH (W)

COMPOSITE SLAB: EFFECTIVE WIDTH	THICK.	COPING	SHEAR CONN. ΣZ_r	S_u	N ES/EC	BOTTOM COVER PLATE X-BEG.	THICK.	WIDTH	LENGTH	TOP COVER PLATE X-BEG.	THICK.	WIDTH	LENGTH
4 84.000	7.000	5.00	1.789	28.65	1.0								

P = 1 DESIGN WITH PL'S
N.P. = 1 DESIGN WITHOUT PL'S

CONCRETE BEAM DATA (T, RECT., FLAT SLAB)

"N" TEN.	"N" COM.	NO. ROWS	BEAM (WEB) IN. WIDTH	ΔW	DEPTH	ΔD	'T' SLAB WIDTH	THICK.	COMPRESSION ST. NO.	SIZE	Δ	DIST.	ROW ONE NO.	SIZE	Δ	DIST.	ROW TWO NO.	SIZE	Δ	DIST.
3																				

ROW THREE NO.	SIZE	Δ	DIST.	ROW FOUR NO.	SIZE	Δ	DIST.	ROW FIVE NO.	SIZE	Δ	DIST.	ROW SIX NO.	SIZE	Δ	DIST.	ROW SEVEN NO.	SIZE	Δ	DIST.	ROW EIGHT NO.	SIZE	Δ	DIST.	ROW NINE NO.	SIZE	Δ	DIST.
4																											

DIMENSIONS

LENGTH – FT.
W_{DLNC} – K/FT.
W_{DLC} – K/FT.
WT. BM. – K/FT.
COPING – IN.
AL. STRESS – K.S.I.
WT. BM. MAT'L. – PCF
W_{SWK} – K/FT.
X_n – FT.
P_n – KIPS.
TYPE STEEL – 572, 588
DEPTH – IN.
THICK. – IN.
WEIGHT – LBS.
Y_{TOP} – IN.
ΣZ_r – K/ROW
X-BEG. – FT.
WIDTH – IN.
$Y_{BOT.}$ – IN.
S_u – K/EA.
SIZE – BAR SIZE (#4, #10, etc.)
Δ – INCREMENT (NO. OF BARS)
DIST. – IN.

SIMPLE SPAN INPUT DATA PROBLEM NUMBER CB-1

02/03/71 USING L/25 FIND SHALLOWEST BEAM H 20 LIVE LOAD 60-FT CONT

SPAN WITH & WITHOUT PLATES

SPAN DATA

BEAM	D/A	L.L.C.	T L M	LENGTH	D.F.M.	D.F.V.	D.F.D.	NPL
CB	0	H 20	0 0 1	60.000	1.455	1.455	1.000	4

WDLNC	WDLC	SWLL	E	W BM	FS	FC	WG	TYPE STEEL
0.716	0.265	0.0	29.00	0.0	0.0	1.200	0.490	36

CONCENTRATED LOADS

X1	P1	X2	P2	X3	P3	X4	P4
0.0	1.680	20.000	2.100	60.000	1.680	40.000	2.100

BEAM DATA

ROLLED		SECTION PROPERTIES			PLATE GIRDER WEB		TOP FLANGE		BOTTOM FLANGE	
BEAM	P NP	I	Y TOP	Y BOT	D	T	W	T	W	T
OWF	0 0 1	0.0	0.0	0.0	0.0	0.0	0.0	0.0	0.0	0.0
OWF	0									

COMPOSITE SLAB

WIDTH	THICKNESS	COPING	SHEAR CAPACITY	ULTIMATE STRENGTH	N=ES/EC
84.000	7.000	0.500	17.89 K/ROW	28.65 KIPS EACH	10

BOTTOM COVER PLATE				TOP COVER PLATE				CONSTANT	
X-BEGIN	THICKNESS	WIDTH	LENGTH	X-BEGIN	THICKNESS	WIDTH	LENGTH	W	T
0.0	0.0	0.0	0.0	0.0	0.0	0.0	0.0	0	0

SIMPLE SPAN OUTPUT DATA PROBLEM NUMBER CB-1

BEAM PROPERTIES

BEAM	AREA	DEPTH	FL. W	FL. T	WEB T	I
30WF 99	29.100	29.640	10.458	0.670	0.522	4000.0

COVER PLATES

BOTTOM COVER PLATE				TOP COVER PLATE			
X-BEGIN	THICKNESS	WIDTH	LENGTH	X-BEGIN	THICKNESS	WIDTH	LENGTH
7.57	0.8750	14.00	44.85	0.0	0.0	0.0	0.0

BEAM WITH PLATES PROPERTIES

AREA	Y-TOP	Y-BOTTOM	I	MIN TERMINAL WELD
41.350	19.340	11.175	6007.7	5/16

COMPOSITE SECTION PROPERTIES

	BEAM ONLY					BEAM WITH PLATES				
N	YTC	YTS	YBS	I	Q SLAB	YTC	YTS	YBS	I	Q SLAB
10	9.73	2.23	27.41	11134.9	366.4	13.14	5.64	24.88	19473.0	566.6
30	14.75	7.25	22.39	8228.2		19.33	11.83	18.68	13331.4	

NUMBER OF SHEAR CONNECTORS NEEDED TO PROVIDE FOR ULTIMATE STRENGTH 124

SIMPLE SPAN OUTPUT DATA PROBLEM NUMBER CB-1

MOMENTS (K-FT.) AT SPAN 1/20 POINTS

SP	GIRDER	P-LOAD	NON-C.	TOT.NC	COMP.	SIDEWK	LIVE LOAD	RR-I
1	11.3	6.3	61.2	78.8	22.7	0.0	100.2 T	0.0
2	21.6	12.6	116.0	150.2	42.9	0.0	189.3 T	0.0
3	31.1	18.9	164.3	214.3	60.8	0.0	267.3 T	0.0
4	39.3	25.2	206.2	270.7	76.3	0.0	334.2 T	0.0
5	46.3	31.5	241.6	319.4	89.4	0.0	390.0 T	0.0
6	52.0	37.8	270.6	360.4	100.2	0.0	434.7 T	0.0
7	56.4	42.0	293.2	391.6	108.5	0.0	469.2 L	0.0
8	59.6	42.0	309.3	410.9	114.5	0.0	495.0 L	0.0
9	61.5	42.0	319.0	422.5	118.1	0.0	510.5 L	0.0
10	62.1	42.0	322.2	426.3	119.2	0.0	515.7 L	0.0

STRESS (PSI) AT SPAN 1/20 POINTS

	MINIMUM STRESS		MAXIMUM STRESS			ALLOWABLE	R FACTOR	
SP	TOP-S	BOT-S	TOP-C	TOP-S	BOT-S	FS	TOP-S	BOT-S
1	3742	-4242	121	3983	-7201	20000	0.940	0.589
2	7133	-8081	229	7588	-13672	20000	0.940	0.591
3	8926	-5806	251	9855	-9903	20000	0.906	0.586
4	11271	-7326	314	12432	-12449	20000	0.907	0.588
5	13292	-8634	367	14647	-14612	20000	0.908	0.591
6	14990	-9729	410	16500	-16394	20000	0.908	0.593
7	16284	-10566	442	17914	-17760	20000	0.909	0.595
8	17092	-11096	467	18812	-18685	20000	0.909	0.594
9	17577	-11414	481	19350	-19241	20000	0.908	0.593
10	17739	-11521	486	19530	-19426	20000	0.908	0.593

SHEARS (KIPS) AT SPAN 1/20 POINTS CB-1

SP	GIRDER	P-LOAD	NON-C.	TOT.NC	COMP.	SIDEWK	LIVE LOAD	RR-I
0	3.9	3.8	21.5	29.2	7.9	0.0	41.8 L	0.0
1	3.6	2.1	19.3	25.0	7.2	0.0	39.0 L	0.0
2	3.3	2.1	17.2	22.6	6.4	0.0	36.3 L	0.0
3	3.0	2.1	15.0	20.1	5.6	0.0	33.6 L	0.0
4	2.5	2.1	12.9	17.5	4.8	0.0	31.0 L	0.0
5	2.1	2.1	10.7	15.0	4.0	0.0	28.5 L	0.0
6	1.7	2.1	8.6	12.4	3.2	0.0	26.1 L	0.0
7	1.3	-0.0	6.4	7.7	2.4	0.0	23.7 L	0.0
8	0.8	-0.0	4.3	5.1	1.6	0.0	21.3 L	0.0
9	0.4	-0.0	2.1	2.6	0.8	0.0	19.0 T	0.0
10	0.0	-0.0	-0.0	-0.0	-0.0	0.0	17.1 T	0.0

	DEAD LOAD DEFLECTIONS (INCHES)					SHEAR	
SP	GIRDER	P-LOAD	NON-C.	TOT.NC	COMP.	RANGE(KIPS)	CON.SPAC(IN)
0	0.0	0.0	0.0	0.0	0.0	41.8	13.02
1	0.038	0.026	0.201	0.265	0.034	40.5	13.43
2	0.075	0.051	0.393	0.520	0.066	39.3	13.84
3	0.109	0.075	0.571	0.755	0.096	38.1	16.12
4	0.140	0.096	0.731	0.967	0.123	37.1	16.58
5	0.167	0.115	0.873	1.156	0.146	36.2	16.97
6	0.191	0.132	0.994	1.316	0.167	35.7	17.23
7	0.209	0.145	1.090	1.444	0.183	35.1	17.50
8	0.223	0.154	1.161	1.538	0.194	34.7	17.74
9	0.231	0.160	1.203	1.594	0.201	34.3	17.92
10	0.234	0.162	1.218	1.613	0.204	34.3	17.92

LIVE LOAD DEFLECTIONS (INCHES)

TRUCK	LANE	MILITARY	RAILROAD	SIDEWALK	L/ 800
0.339	0.375	0.0	0.0	0.0	0.900

SIMPLE SPAN OUTPUT DATA PROBLEM NUMBER CB-1

BEAM PROPERTIES

BEAM	AREA	DEPTH	FL. W	FL. T	WEB T	I
30WF190	56.000	30.120	15.040	1.185	0.710	8850.0

COVER PLATES

BOTTOM COVER PLATE				TOP COVER PLATE			
X-BEGIN	THICKNESS	WIDTH	LENGTH	X-BEGIN	THICKNESS	WIDTH	LENGTH
30.00	0.0	0.0	-0.0	0.0	0.0	0.0	0.0

BEAM WITH PLATES PROPERTIES

AREA	Y-TOP	Y-BOTTOM	I	MIN TERMINAL WELD
56.000	15.060	15.060	8850.0	5/16

COMPOSITE SECTION PROPERTIES

	BEAM ONLY					BEAM WITH PLATES				
N	YTC	YTS	YBS	I	Q SLAB	YTC	YTS	YBS	I	Q SLAB
10	12.80	5.30	24.82	19510.1	546.7	12.80	5.30	24.82	19510.1	546.7
30	17.62	10.12	20.00	14204.4		17.62	10.12	20.00	14204.4	

NUMBER OF SHEAR CONNECTORS NEEDED TO PROVIDE FOR ULTIMATE STRENGTH 124

SIMPLE SPAN OUTPUT DATA PROBLEM NUMBER CB-1

MOMENTS (K-FT.) AT SPAN 1/20 POINTS

SP	GIRDER	P-LOAD	NON-C.	TOT.NC	COMP.	SIDEWK	LIVE LOAD	RR-I
1	16.2	6.3	61.2	83.8	22.7	0.0	100.2 T	0.0
2	30.8	12.6	116.0	159.4	42.9	0.0	189.3 T	0.0
3	43.6	18.9	164.3	226.8	60.8	0.0	267.3 T	0.0
4	54.7	25.2	206.2	286.1	76.3	0.0	334.2 T	0.0
5	64.1	31.5	241.6	337.3	89.4	0.0	390.0 T	0.0
6	71.8	37.8	270.6	380.3	100.2	0.0	434.7 T	0.0
7	77.8	42.0	293.2	413.0	108.5	0.0	469.2 L	0.0
8	82.1	42.0	309.3	433.4	114.5	0.0	495.0 L	0.0
9	84.6	42.0	319.0	445.6	118.1	0.0	510.5 L	0.0
10	85.5	42.0	322.2	449.7	119.2	0.0	515.7 L	0.0

STRESS (PSI) AT SPAN 1/20 POINTS

	MINIMUM STRESS		MAXIMUM STRESS			ALLOWABLE	R FACTOR	
SP	TOP-S	BOT-S	TOP-C	TOP-S	BOT-S	FS	TOP-S	BOT-S
1	1904	-2093	90	2230	-3622	20000	0.854	0.578
2	3621	-3979	170	4238	-6869	20000	0.854	0.579
3	5151	-5659	240	6022	-9739	20000	0.855	0.581
4	6495	-7132	300	7584	-12234	20000	0.856	0.583
5	7651	-8398	351	8922	-14352	20000	0.858	0.585
6	8621	-9457	391	10037	-16094	20000	0.859	0.588
7	9361	-10267	423	10890	-17431	20000	0.860	0.589
8	9828	-10784	446	11441	-18342	20000	0.859	0.588
9	10108	-11094	460	11772	-18888	20000	0.859	0.587
10	10202	-11198	465	11882	-19070	20000	0.859	0.587

SHEARS (KIPS) AT SPAN 1/20 POINTS CB-1

SP	GIRDER	P-LOAD	NON-C.	TOT.NC	COMP.	SIDEWK	LIVE LOAD	RR-1
0	5.7	3.8	21.5	31.0	7.9	0.0	41.8 L	0.0
1	5.1	2.1	19.3	26.6	7.2	0.0	39.0 L	0.0
2	4.6	2.1	17.2	23.8	6.4	0.0	36.3 L	0.0
3	4.0	2.1	15.0	21.1	5.6	0.0	33.6 L	0.0
4	3.4	2.1	12.9	18.4	4.8	0.0	31.0 L	0.0
5	2.8	2.1	10.7	15.7	4.0	0.0	28.5 L	0.0
6	2.3	2.1	8.6	13.0	3.2	0.0	26.1 L	0.0
7	1.7	-0.0	6.4	8.2	2.4	0.0	23.7 L	0.0
8	1.1	-0.0	4.3	5.4	1.6	0.0	21.3 L	0.0
9	0.6	-0.0	2.1	2.7	0.8	0.0	19.0 T	0.0
10	-0.0	-0.0	-0.0	-0.0	-0.0	0.0	17.1 T	0.0

	DEAD LOAD DEFLECTIONS (INCHES)					SHEAR	
SP	GIRDER	P-LOAD	NON-C.	TOT.NC	COMP.	RANGE(KIPS)	CON.SPAC(IN)
0	0.0	0.0	0.0	0.0	0.0	41.8	15.28
1	0.034	0.017	0.130	0.181	0.030	40.5	15.77
2	0.068	0.033	0.255	0.357	0.059	39.3	16.25
3	0.099	0.049	0.374	0.523	0.086	38.1	16.74
4	0.128	0.064	0.483	0.675	0.111	37.1	17.22
5	0.154	0.077	0.580	0.810	0.134	36.2	17.63
6	0.176	0.088	0.661	0.925	0.153	35.7	17.89
7	0.193	0.097	0.727	1.017	0.168	35.1	18.17
8	0.206	0.103	0.775	1.084	0.179	34.7	18.42
9	0.213	0.107	0.804	1.124	0.185	34.3	18.61
10	0.216	0.108	0.813	1.138	0.188	34.3	18.61

LIVE LOAD DEFLECTIONS (INCHES)

TRUCK	LANE	MILITARY	RAILROAD	SIDEWALK	L/ 800
0.333	0.367	0.0	0.0	0.0	0.900

SIMPLE SPAN

STATE HIGHWAY DEPARTMENT OF GEORGIA
BRIDGE DIVISION

10-15-70

IDENTIFICATION

"CONT" TO CONTINUE REMARKS

PROG.	PROB. NO.	PROJECT NO.	COUNTY	DATE	DESIGNER	ETC.	
* B04	CB-2	FIND 24WF & 27WF THAT WILL CARRY HS20 LOAD 60-0 SPAN					CONT
* 8-0	SPACING INTERIOR BEAM PLATE MIN. THICK 0.5 MAX WIDTH 10.5						

SPAN DATA

CODE TYPE	D/A	LIVE LOAD CLASS	T	L	M	SPAN LENGTH	DFM	DFV	DFD	NPL	WDLNC	WDLC	WSWK	EBEAM X 10^6	WT.BM.	ALLOW. STRESS STEEL	ALLOW. STRESS CONC.	WT.BM. MAT'L.	TYPE STEEL
CB		HS20				60.000	1.455	1.455	1.000	4	.716	.265		2900			1.200	490	441

1 = ANALYSIS (D/A) 1 = SKIP (T, L, M)
BLANK = DESIGN (D/A)

CONCENTRATED LOADS (LIMIT 40)

		X1	P1	X2	P2	X3	P3	X4	P4
2	1	0.0	1680	20.0	2100	60.0	1680	40.0	2100
2	2								
2	3								
2	4								

CODE: TYPE
RB – ROLLED BEAM
RP – ROLLED W/PLATE
CB – COMPOSITE ROLLED
PG – PLATE GIRDER
CG – COMPOSITE GIRDER
TB – CONCRETE BEAM

STEEL BEAM DATA

ROLLED BEAM: BEAM 1 DEPTH & WEIGHT	BEAM 2 DEPTH & WEIGHT	P	NP	NON-STANDARD BEAM: SECTION PROPERTIES I_o IN.^4	YTOP	YBOT.	PLATE GIRDER: WEB DEPTH	WEB THICK.	TOP FLANGE WIDTH	TOP FLANGE THICK.	BOTTOM FLANGE WIDTH	BOTTOM FLANGE THICK.	CONW	CONT
24 WF	27 WF	1												

1 = CONSTANT THICKNESS (T)
WIDTH (W)

COMPOSITE SLAB: EFFECTIVE WIDTH	THICK.	COPING	SHEAR CONN. ΣZ_r	SU	N ES/EC	BOTTOM COVER PLATE X-BEG.	THICK.	WIDTH	LENGTH	TOP COVER PLATE X-BEG.	THICK.	WIDTH	LENGTH
84.000	7.000	.500	1.789	28.65	1.0		.500	1.050					

P = 1 DESIGN WITH ℞'s
N.P. = 1 DESIGN WITHOUT ℞'s

CONCRETE BEAM DATA (T, RECT., FLAT SLAB)

"N" TEN.	COM.	NO. ROWS	BEAM (WEB) IN. WIDTH	ΔW	DEPTH	ΔD	'T' SLAB WIDTH	THICK.	COMPRESSION ST. NO.	SIZE	Δ	DIST.	ROW ONE NO.	SIZE	Δ	DIST.	ROW TWO NO.	SIZE	Δ	DIST.

ROW THREE NO.	SIZE	Δ	DIST.	ROW FOUR NO.	SIZE	Δ	DIST.	ROW FIVE NO.	SIZE	Δ	DIST.	ROW SIX NO.	SIZE	Δ	DIST.	ROW SEVEN NO.	SIZE	Δ	DIST.	ROW EIGHT NO.	SIZE	Δ	DIST.	ROW NINE NO.	SIZE	Δ	DIST.

DIMENSIONS

LENGTH – FT.
WDLNC – K/FT.
WDLC – K/FT.
WT. BM. – K/FT.
COPING – IN.
AL. STRESS – K.S.I.
WT. BM. MAT'L. – PCF
WSWK – K/FT.
X_n – FT.
P_n – KIPS.
TYPE STEEL – 572, 588
DEPTH – IN.
THICK. – IN.
WEIGHT – LBS.
YTOP – IN.
ΣZ_r – K/ROW
X-BEG. – FT.
WIDTH – IN.
YBOT. – IN.
SU – K/EA.
SIZE – BAR SIZE (#4, #10, etc.)
Δ – INCREMENT (NO. OF BARS)
DIST. – IN.

SIMPLE SPAN INPUT DATA PROBLEM NUMBER CB-2

02/03/71 FIND 24WF & 27WF THAT WILL CARRY HS20 LOAD 60-0 SPAN CONT

8-0 SPACING INTERIOR BEAM PLATE MIN. THICK 0.5 MAX WIDTH 10.5

SPAN DATA

BEAM	D/A	L.L.C.	T L M	LENGTH	D.F.M.	D.F.V.	D.F.D.	NPL
CB	0	HS20	0 0 0	60.000	1.455	1.455	1.000	4

WDLNC	WDLC	SWLL	E	W BM	FS	FC	WG	TYPE STEEL
0.716	0.265	0.0	29.00	0.0	0.0	1.200	0.490	441

CONCENTRATED LOADS

X1	P1	X2	P2	X3	P3	X4	P4
0.0	1.680	20.000	2.100	60.000	1.680	40.000	2.100

BEAM DATA

ROLLED			SECTION PROPERTIES			PLATE GIRDER WEB		TOP FLANGE		BOTTOM FLANGE	
BEAM	P	NP	I	Y TOP	Y BOT	D	T	W	T	W	T
24WF	0 1	0	0.0	0.0	0.0	0.0	0.0	0.0	0.0	0.0	0.0
27WF	0										

COMPOSITE SLAB

WIDTH	THICKNESS	COPING	SHEAR CAPACITY	ULTIMATE STRENGTH	N=ES/EC
84.000	7.000	0.500	17.89 K/ROW	28.65 KIPS EACH	10

BOTTOM COVER PLATE				TOP COVER PLATE				CONSTANT	
X-BEGIN	THICKNESS	WIDTH	LENGTH	X-BEGIN	THICKNESS	WIDTH	LENGTH	W	T
0.0	0.5000	10.50	0.0	0.0	0.0	0.0	0.0	0	0

SIMPLE SPAN OUTPUT DATA PROBLEM NUMBER CB-2

BEAM PROPERTIES

BEAM	AREA	DEPTH	FL. W	FL. T	WEB T	I
24WF110	32.500	24.160	12.042	0.855	0.510	3330.0

COVER PLATES

BOTTOM COVER PLATE				TOP COVER PLATE			
X-BEGIN	THICKNESS	WIDTH	LENGTH	X-BEGIN	THICKNESS	WIDTH	LENGTH
9.04	1.2500	10.50	41.93	0.0	0.0	0.0	0.0

BEAM WITH PLATES PROPERTIES

AREA	Y-TOP	Y-BOTTOM	I	MIN TERMINAL WELD
45.625	15.735	9.675	4840.8	8/16

COMPOSITE SECTION PROPERTIES

	BEAM ONLY					BEAM WITH PLATES				
N	YTC	YTS	YBS	I	Q SLAB	YTC	YTS	YBS	I	Q SLAB
10	9.22	1.72	22.44	8982.1	336.6	12.12	4.62	20.79	15086.5	507.0
30	13.53	6.03	18.13	6571.4		17.30	9.80	15.61	10260.5	

NUMBER OF SHEAR CONNECTORS NEEDED TO PROVIDE FOR ULTIMATE STRENGTH 124

SIMPLE SPAN OUTPUT DATA PROBLEM NUMBER CB-2

MOMENTS (K-FT.) AT SPAN 1/20 POINTS

SP	GIRDER	P-LOAD	NON-C.	TOT.NC	COMP.	SIDEWK	LIVE LOAD	RR-I
1	12.2	6.3	61.2	79.7	22.7	0.0	158.6 T	0.0
2	23.4	12.6	116.0	152.0	42.9	0.0	297.2 T	0.0
3	33.7	18.9	164.3	216.9	60.8	0.0	415.9 T	0.0
4	42.7	25.2	206.2	274.1	76.3	0.0	514.5 T	0.0
5	50.4	31.5	241.6	323.5	89.4	0.0	593.3 T	0.0
6	56.6	37.8	270.6	365.1	100.2	0.0	652.1 T	0.0
7	61.5	42.0	293.2	396.7	108.5	0.0	696.0 T	0.0
8	65.0	42.0	309.3	416.3	114.5	0.0	730.4 T	0.0
9	67.1	42.0	319.0	428.1	118.1	0.0	744.8 T	0.0
10	67.8	42.0	322.2	432.0	119.2	0.0	739.3 T	0.0

STRESS (PSI) AT SPAN 1/20 POINTS

	MINIMUM STRESS		MAXIMUM STRESS			ALLOWABLE	R FACTOR	
SP	TOP-S	BOT-S	TOP-C	TOP-S	BOT-S	FS	TOP-S	BOT-S
1	3720	-4220	214	4085	-8974	27000	0.911	0.470
2	7090	-8039	401	7775	-16947	27000	0.912	0.474
3	10111	-11455	562	11069	-23919	27000	0.913	0.479
4	11567	-7967	547	13459	-16475	25000	0.859	0.484
5	13644	-9391	632	15826	-19201	25000	0.862	0.489
6	15388	-10584	696	17786	-21365	25000	0.865	0.495
7	16718	-11495	744	19277	-23004	25000	0.867	0.500
8	17550	-12073	781	20236	-24151	25000	0.867	0.500
9	18050	-12421	797	20788	-24736	25000	0.868	0.502
10	18216	-12536	793	20934	-24760	25000	0.870	0.506

SHEARS (KIPS) AT SPAN 1/20 POINTS CB-2

SP	GIRDER	P-LOAD	NON-C.	TOT.NC	COMP.	SIDEWK	LIVE LOAD	RR-I
0	4.2	3.8	21.5	29.5	7.9	0.0	56.2 T	0.0
1	3.9	2.1	19.3	25.3	7.2	0.0	53.0 T	0.0
2	3.6	2.1	17.2	22.9	6.4	0.0	49.9 T	0.0
3	3.2	2.1	15.0	20.4	5.6	0.0	46.7 T	0.0
4	2.8	2.1	12.9	17.8	4.8	0.0	43.5 T	0.0
5	2.3	2.1	10.7	15.2	4.0	0.0	40.3 T	0.0
6	1.9	2.1	8.6	12.5	3.2	0.0	37.1 T	0.0
7	1.4	-0.0	6.4	7.8	2.4	0.0	33.7 T	0.0
8	0.9	-0.0	4.3	5.2	1.6	0.0	30.3 T	0.0
9	0.5	-0.0	2.1	2.6	0.8	0.0	26.9 T	0.0
10	0.0	-0.0	-0.0	-0.0	-0.0	0.0	23.5 T	0.0

	DEAD LOAD DEFLECTIONS (INCHES)					SHEAR	
SP	GIRDER	P-LOAD	NON-C.	TOT.NC	COMP.	RANGE(KIPS)	CON.SPAC(IN)
0	0.0	0.0	0.0	0.0	0.0	56.2	8.50
1	0.052	0.032	0.251	0.335	0.044	54.6	8.75
2	0.102	0.064	0.492	0.658	0.087	52.9	9.02
3	0.149	0.093	0.714	0.956	0.126	52.0	9.18
4	0.191	0.120	0.913	1.224	0.161	51.1	10.42
5	0.228	0.144	1.090	1.461	0.192	50.1	10.62
6	0.259	0.164	1.239	1.663	0.218	49.2	10.83
7	0.284	0.181	1.359	1.824	0.239	48.0	11.08
8	0.302	0.192	1.446	1.941	0.254	47.4	11.23
9	0.314	0.199	1.499	2.012	0.263	47.0	11.32
10	0.317	0.201	1.517	2.036	0.266	46.9	11.35

LIVE LOAD DEFLECTIONS (INCHES)

TRUCK	LANE	MILITARY	RAILROAD	SIDEWALK	L/ 800
0.728	0.487	0.548	0.0	0.0	0.900

SIMPLE SPAN OUTPUT DATA PROBLEM NUMBER CB-2

BEAM PROPERTIES

BEAM	AREA	DEPTH	FL. W	FL. T	WEB T	I
27WF 94	27.700	26.910	9.990	0.747	0.490	3270.0

COVER PLATES

BOTTOM COVER PLATE				TOP COVER PLATE			
X-BEGIN	THICKNESS	WIDTH	LENGTH	X-BEGIN	THICKNESS	WIDTH	LENGTH
7.61	1.0000	13.00	44.78	0.0	0.0	0.0	0.0

BEAM WITH PLATES PROPERTIES

AREA	Y-TOP	Y-BOTTOM	I	MIN TERMINAL WELD
40.700	17.912	9.998	4994.1	6/16

COMPOSITE SECTION PROPERTIES

	BEAM ONLY					BEAM WITH PLATES				
N	YTC	YTS	YBS	I	Q SLAB	YTC	YTS	YBS	I	Q SLAB
10	9.09	1.59	25.32	9247.0	328.7	12.46	4.96	22.95	16782.7	527.0
30	13.72	6.22	20.69	6847.2		18.29	10.79	17.12	11426.1	

NUMBER OF SHEAR CONNECTORS NEEDED TO PROVIDE FOR ULTIMATE STRENGTH 124

SIMPLE SPAN OUTPUT DATA PROBLEM NUMBER CB-2

MOMENTS (K-FT.) AT SPAN 1/20 POINTS

SP	GIRDER	P-LOAD	NON-C.	TOT.NC	COMP.	SIDEWK	LIVE LOAD	RR-I
1	11.0	6.3	61.2	78.5	22.7	0.0	158.6 T	0.0
2	21.2	12.6	116.0	149.8	42.9	0.0	297.2 T	0.0
3	30.4	18.9	164.3	213.7	60.8	0.0	415.9 T	0.0
4	38.5	25.2	206.2	269.9	76.3	0.0	514.5 T	0.0
5	45.4	31.5	241.6	318.5	89.4	0.0	593.3 T	0.0
6	51.0	37.8	270.6	359.4	100.2	0.0	652.1 T	0.0
7	55.3	42.0	293.2	390.5	108.5	0.0	696.0 T	0.0
8	58.4	42.0	309.3	409.7	114.5	0.0	730.4 T	0.0
9	60.3	42.0	319.0	421.3	118.1	0.0	744.8 T	0.0
10	60.9	42.0	322.2	425.1	119.2	0.0	739.3 T	0.0

STRESS (PSI) AT SPAN 1/20 POINTS

	MINIMUM STRESS		MAXIMUM STRESS			ALLOWABLE	R FACTOR	
SP	TOP-S	BOT-S	TOP-C	TOP-S	BOT-S	FS	TOP-S	BOT-S
1	4124	-4698	205	4451	-9909	27000	0.927	0.474
2	7862	-8951	384	8475	-18716	27000	0.928	0.478
3	9885	-6226	409	11361	-13049	25000	0.870	0.477
4	12483	-7856	507	14309	-16299	25000	0.872	0.482
5	14722	-9259	585	16828	-18994	25000	0.875	0.488
6	16604	-10435	645	18918	-21133	25000	0.878	0.494
7	18038	-11332	689	20508	-22753	25000	0.880	0.498
8	18933	-11901	724	21525	-23886	25000	0.880	0.498
9	19469	-12242	739	22113	-24463	25000	0.880	0.500
10	19648	-12356	735	22272	-24486	25000	0.882	0.505

SHEARS (KIPS) AT SPAN 1/20 POINTS CB-2

SP	GIRDER	P-LOAD	NON-C.	TOT.NC	COMP.	SIDEWK	LIVE LOAD	RR-I
0	3.8	3.8	21.5	29.1	7.9	0.0	56.2 T	0.0
1	3.5	2.1	19.3	25.0	7.2	0.0	53.0 T	0.0
2	3.2	2.1	17.2	22.5	6.4	0.0	49.9 T	0.0
3	2.9	2.1	15.0	20.0	5.6	0.0	46.7 T	0.0
4	2.5	2.1	12.9	17.5	4.8	0.0	43.5 T	0.0
5	2.1	2.1	10.7	14.9	4.0	0.0	40.3 T	0.0
6	1.7	2.1	8.6	12.4	3.2	0.0	37.1 T	0.0
7	1.2	-0.0	6.4	7.7	2.4	0.0	33.7 T	0.0
8	0.8	-0.0	4.3	5.1	1.6	0.0	30.3 T	0.0
9	0.4	-0.0	2.1	2.6	0.8	0.0	26.9 T	0.0
10	0.0	-0.0	-0.0	-0.0	-0.0	0.0	23.5 T	0.0

	DEAD LOAD DEFLECTIONS (INCHES)					SHEAR	
SP	GIRDER	P-LOAD	NON-C.	TOT.NC	COMP.	RANGE(KIPS)	CON.SPAC(IN)
0	0.0	0.0	0.0	0.0	0.0	56.2	8.96
1	0.045	0.031	0.242	0.319	0.040	54.6	9.23
2	0.089	0.062	0.474	0.625	0.078	52.9	9.51
3	0.129	0.090	0.688	0.907	0.112	52.0	10.95
4	0.165	0.116	0.881	1.162	0.144	51.1	11.15
5	0.198	0.139	1.052	1.388	0.171	50.1	11.36
6	0.225	0.159	1.197	1.580	0.195	49.2	11.59
7	0.247	0.174	1.313	1.734	0.213	48.0	11.86
8	0.263	0.186	1.397	1.846	0.227	47.4	12.02
9	0.273	0.193	1.449	1.914	0.235	47.0	12.11
10	0.276	0.195	1.466	1.937	0.238	46.9	12.14

LIVE LOAD DEFLECTIONS (INCHES)

TRUCK	LANE	MILITARY	RAILROAD	SIDEWALK	L/ 800
0.652	0.436	0.491	0.0	0.0	0.900

SIMPLE SPAN

10-15-70

STATE HIGHWAY DEPARTMENT OF GEORGIA
BRIDGE DIVISION

IDENTIFICATION

"CONT" TO CONTINUE REMARKS

PROG.	PROB. NO.	PROJECT NO.	COUNTY	DATE	DESIGNER	ETC.	
* B04	CB-3	START WITH 30WF 99 FIND COMPOSITE BEAM WITH # W/OUT					CONT
* PLATES A36 STEEL PEDESTRIAN OVERPASS SET 0.5 MIN THICK							

SPAN DATA

CODE			LIVE LOAD				SPAN LENGTH	DFM	DFV	DFD	NPL	WDLNC	WDLC	WSWK	EBEAM X 10^6	WT.BM.	ALLOW. STRESS		WT.BM. MAT'L.	TYPE STEEL
	TYPE	D/A	CLASS	T	L	M											STEEL	CONC.		
1	CB		HS20	1	1	1	75.00	1.273	1.429	0.800	4	.315	.133	.298	29.00	.	.	1.200	49.0	.36

1 = ANALYSIS (D/A) 1 = SKIP (T, L, M)
BLANK = DESIGN (D/A)

CONCENTRATED LOADS (LIMIT 40)

	X1	P1	X2	P2	X3	P3	X4	P4
2 1	0. 0	0.560	25.000	0.700	75.000	0.560	50. 0	0.700
2 2								
2 3								
2 4								

CODE: TYPE
RB – ROLLED BEAM
RP – ROLLED W/PLATE
CB – COMPOSITE ROLLED
PG – PLATE GIRDER
CG – COMPOSITE GIRDER
TB – CONCRETE BEAM

STEEL BEAM DATA

ROLLED BEAM						NON-STANDARD BEAM			PLATE GIRDER							
BEAM 1			BEAM 2		P	NP	SECTION PROPERTIES			WEB		TOP FLANGE		BOTTOM FLANGE		CONW	CONT
DEPTH & WEIGHT			DEPTH & WEIGHT				I_o IN.^4	YTOP	YBOT.	DEPTH	THICK.	WIDTH	THICK.	WIDTH	THICK.		
3 30	WF	99		WF		1											

1 = CONSTANT THICKNESS (T)
WIDTH (W)

COMPOSITE SLAB			SHEAR CONN.		N	BOTTOM COVER PLATE				TOP COVER PLATE			
EFFECTIVE WIDTH	THICK.	COPING	ΣZ_r	SU	ES/EC	X-BEG.	THICK.	WIDTH	LENGTH	X-BEG.	THICK.	WIDTH	LENGTH
4 420.00	7.000	.375	5.96	28.65	1 0	.	50.00	1.000		.	.	.	.

P = 1 DESIGN WITH PL's
N.P. = 1 DESIGN WITHOUT PL's

CONCRETE BEAM DATA (T, RECT., FLAT SLAB)

"N"		NO.	BEAM (WEB) IN.				'T' SLAB		COMPRESSION ST.				ROW ONE				ROW TWO			
TEN.	COM.	ROWS	WIDTH	ΔW	DEPTH	ΔD	WIDTH	THICK.	NO.	SIZE	Δ	DIST.	NO.	SIZE	Δ	DIST.	NO.	SIZE	Δ	DIST.
3			.	.	.	.	.	.				.				.				.

ROW THREE				ROW FOUR				ROW FIVE				ROW SIX				ROW SEVEN				ROW EIGHT				ROW NINE			
NO.	SIZE	Δ	DIST.	NO.	SIZE	Δ	DIST.	NO.	SIZE	Δ	DIST.	NO.	SIZE	Δ	DIST.	NO.	SIZE	Δ	DIST.	NO.	SIZE	Δ	DIST.	NO.	SIZE	Δ	DIST.
4			.				.				.								.				.				.

DIMENSIONS

LENGTH – FT.
WDLNC – K/FT.
WDLC – K/FT.
WT. BM. – K/FT.
COPING – IN.
AL. STRESS – K.S.I.
WT. BM. MAT'L. – PCF
WSWK – K/FT.
X_n – FT.
P_n – KIPS.
TYPE STEEL – 572, 588
DEPTH – IN.
THICK. – IN.
WEIGHT – LBS.
YTOP – IN.
ΣZ_r – K/ROW
X-BEG. – FT.
WIDTH – IN.
YBOT. – IN.
SU – K/EA.
SIZE – BAR SIZE (#4, #10, etc.)
Δ – INCREMENT (NO. OF BARS)
DIST. – IN.

SIMPLE SPAN INPUT DATA PROBLEM NUMBER CB-3

02/03/71 START WITH 30WF 99 FIND COMPOSITE BEAM WITH & W/OUT CONT

PLATES A36 STEEL PEDESTRIAN OVERPASS SET 0.5 MIN THICK

SPAN DATA

BEAM	D/A	L.L.C.	T L M	LENGTH	D.F.M.	D.F.V.	D.F.D.	NPL
CB	0	HS20	1 1 1	75.000	1.273	1.429	0.800	4

WDLNC	WDLC	SWLL	E	W BM	FS	FC	WG	TYPE STEEL
0.315	0.133	0.298	29.00	0.0	0.0	1.200	0.490	36

CONCENTRATED LOADS

X1	P1	X2	P2	X3	P3	X4	P4
0.0	0.560	25.000	0.700	75.000	0.560	50.000	0.700

BEAM DATA

ROLLED		SECTION PROPERTIES			PLATE GIRDER WEB		TOP FLANGE		BOTTOM FLANGE	
BEAM	P NP	I	Y TOP	Y BOT	D	T	W	T	W	T
30WF 99	0 1	0.0	0.0	0.0	0.0	0.0	0.0	0.0	0.0	0.0
OWF	0									

COMPOSITE SLAB

WIDTH	THICKNESS	COPING	SHEAR CAPACITY	ULTIMATE STRENGTH	N=ES/EC
42.000	7.000	0.375	5.96 K/ROW	28.65 KIPS EACH	10

BOTTOM COVER PLATE				TOP COVER PLATE				CONSTANT	
X-BEGIN	THICKNESS	WIDTH	LENGTH	X-BEGIN	THICKNESS	WIDTH	LENGTH	W	T
0.0	0.5000	10.00	0.0	0.0	0.0	0.0	0.0	0	0

SIMPLE SPAN OUTPUT DATA PROBLEM NUMBER CB-3

BEAM PROPERTIES

BEAM	AREA	DEPTH	FL. W	FL. T	WEB T	I
30WF 99	29.100	29.640	10.458	0.670	0.522	4000.0

COVER PLATES

BOTTOM COVER PLATE				TOP COVER PLATE			
X-BEGIN	THICKNESS	WIDTH	LENGTH	X-BEGIN	THICKNESS	WIDTH	LENGTH
21.56	0.5000	5.50	31.87	0.0	0.0	0.0	0.0

BEAM WITH PLATES PROPERTIES

AREA	Y-TOP	Y-BOTTOM	I	MIN TERMINAL WELD
31.850	16.121	14.019	4570.7	4/16

COMPOSITE SECTION PROPERTIES

	BEAM ONLY					BEAM WITH PLATES				
N	YTC	YTS	YBS	I	Q SLAB	YTC	YTS	YBS	I	Q SLAB
10	12.80	5.42	24.22	9231.4	273.4	13.90	6.52	23.62	10803.6	305.7
30	17.49	10.11	19.53	6602.3		18.79	11.42	18.72	7607.2	

NUMBER OF SHEAR CONNECTORS NEEDED TO PROVIDE FOR ULTIMATE STRENGTH 62

SIMPLE SPAN OUTPUT DATA PROBLEM NUMBER CB-3

MOMENTS (K-FT.) AT SPAN 1/20 POINTS

SP	GIRDER	P-LOAD	NON-C.	TOT.NC	COMP.	SIDEWK	LIVE LOAD	RR-I
1	13.8	2.6	42.1	58.5	17.8	39.8	0.0 M	0.0
2	26.2	5.2	79.7	111.2	33.7	75.4	0.0 M	0.0
3	37.2	7.9	113.0	158.0	47.7	106.9	0.0 M	0.0
4	46.8	10.5	141.7	199.0	59.8	134.1	0.0 M	0.0
5	55.0	13.1	166.1	234.2	70.1	157.1	0.0 M	0.0
6	61.8	15.7	186.0	263.6	78.6	176.0	0.0 M	0.0
7	67.2	17.5	201.6	286.2	85.1	190.7	0.0 M	0.0
8	71.0	17.5	212.6	301.1	89.8	201.1	0.0 M	0.0
9	73.3	17.5	219.3	310.0	92.6	207.4	0.0 M	0.0
10	74.0	17.5	221.5	313.0	93.5	209.5	0.0 M	0.0

STRESS (PSI) AT SPAN 1/20 POINTS

	MINIMUM STRESS		MAXIMUM STRESS			ALLOWABLE	R FACTOR	
SP	TOP-S	BOT-S	TOP-C	TOP-S	BOT-S	FS	TOP-S	BOT-S
1	2927	-3231	85	3207	-4484	20000	0.912	0.721
2	5560	-6137	161	6092	-8511	20000	0.913	0.721
3	7901	-8718	228	8655	-12081	20000	0.913	0.722
4	9948	-10973	286	10894	-15194	20000	0.913	0.722
5	11703	-12903	335	12811	-17850	20000	0.914	0.723
6	12572	-12022	349	13847	-16639	20000	0.908	0.723
7	13646	-13047	378	15027	-18049	20000	0.908	0.723
8	14360	-13733	399	15817	-19010	20000	0.908	0.722
9	14788	-14144	411	16291	-19586	20000	0.908	0.722
10	14931	-14282	415	16449	-19778	20000	0.908	0.722

SHEARS (KIPS) AT SPAN 1/20 POINTS CB-3

SP	GIRDER	P-LOAD	NON-C.	TOT.NC	COMP.	SIDEWK	LIVE LOAD	RR-I
0	3.9	1.3	11.8	16.9	5.0	11.2	0.0 M	0.0
1	3.5	0.7	10.6	14.8	4.5	10.1	0.0 M	0.0
2	3.1	0.7	9.4	13.3	4.0	9.1	0.0 M	0.0
3	2.7	0.7	8.3	11.7	3.5	8.1	0.0 M	0.0
4	2.4	0.7	7.1	10.2	3.0	7.2	0.0 M	0.0
5	2.0	0.7	5.9	8.6	2.5	6.3	0.0 M	0.0
6	1.6	0.7	4.7	7.1	2.0	5.5	0.0 M	0.0
7	1.2	-0.0	3.5	4.8	1.5	4.7	0.0 M	0.0
8	0.8	-0.0	2.4	3.2	1.0	4.0	0.0 M	0.0
9	0.4	-0.0	1.2	1.6	0.5	3.4	0.0 M	0.0
10	0.0	-0.0	-0.0	-0.0	-0.0	2.8	0.0 M	0.0

	DEAD LOAD DEFLECTIONS (INCHES)					SHEAR	
SP	GIRDER	P-LOAD	NON-C.	TOT.NC	COMP.	RANGE(KIPS)	CON.SPAC(IN)
0	0.0	0.0	0.0	0.0	0.0	11.2	18.01
1	0.095	0.022	0.285	0.402	0.073	10.1	19.90
2	0.186	0.044	0.561	0.792	0.143	9.2	21.96
3	0.273	0.065	0.821	1.159	0.209	8.3	24.17
4	0.351	0.084	1.057	1.493	0.269	7.6	26.48
5	0.420	0.101	1.264	1.785	0.322	7.0	28.81
6	0.477	0.116	1.435	2.028	0.365	6.5	32.50
7	0.523	0.127	1.572	2.221	0.400	6.1	34.58
8	0.556	0.135	1.671	2.362	0.425	5.8	36.25
9	0.576	0.140	1.731	2.447	0.440	5.6	37.32
10	0.583	0.141	1.752	2.476	0.445	5.6	37.70

LIVE LOAD DEFLECTIONS (INCHES)

TRUCK	LANE	MILITARY	RAILROAD	SIDEWALK	L/1000
0.0	0.0	0.0	0.0	0.706	0.900

SIMPLE SPAN OUTPUT DATA PROBLEM NUMBER CB-3

BEAM PROPERTIES

BEAM	AREA	DEPTH	FL. W	FL. T	WEB T	I
30WF124	36.500	30.160	10.521	0.930	0.585	5360.0

COVER PLATES

BOTTOM COVER PLATE				TOP COVER PLATE			
X-BEGIN	THICKNESS	WIDTH	LENGTH	X-BEGIN	THICKNESS	WIDTH	LENGTH
37.50	0.0	0.0	-0.0	0.0	0.0	0.0	0.0

BEAM WITH PLATES PROPERTIES

AREA	Y-TOP	Y-BOTTOM	I	MIN TERMINAL WELD
36.500	15.080	15.080	5360.0	5/16

COMPOSITE SECTION PROPERTIES

	BEAM ONLY					BEAM WITH PLATES				
N	YTC	YTS	YBS	I	Q SLAB	YTC	YTS	YBS	I	Q SLAB
10	14.00	6.62	23.54	11330.7	308.7	14.00	6.62	23.54	11330.7	308.7
30	18.44	11.07	19.09	8175.8		18.44	11.07	19.09	8175.8	

NUMBER OF SHEAR CONNECTORS NEEDED TO PROVIDE FOR ULTIMATE STRENGTH 62

SIMPLE SPAN OUTPUT DATA PROBLEM NUMBER CB-3

MOMENTS (K-FT.) AT SPAN 1/20 POINTS

SP	GIRDER	P-LOAD	NON-C.	TOT.NC	COMP.	SIDEWK	LIVE LOAD	RR-I
1	16.6	2.6	42.1	61.3	17.8	39.8	0.0 M	0.0
2	31.4	5.2	79.7	116.4	33.7	75.4	0.0 M	0.0
3	44.5	7.9	113.0	165.3	47.7	106.9	0.0 M	0.0
4	55.8	10.5	141.7	208.0	59.8	134.1	0.0 M	0.0
5	65.4	13.1	166.1	244.6	70.1	157.1	0.0 M	0.0
6	73.2	15.7	186.0	275.0	78.6	176.0	0.0 M	0.0
7	79.3	17.5	201.6	298.4	85.1	190.7	0.0 M	0.0
8	83.7	17.5	212.6	313.8	89.8	201.1	0.0 M	0.0
9	86.3	17.5	219.3	323.1	92.6	207.4	0.0 M	0.0
10	87.2	17.5	221.5	326.2	93.5	209.5	0.0 M	0.0

STRESS (PSI) AT SPAN 1/20 POINTS

	MINIMUM STRESS		MAXIMUM STRESS			ALLOWABLE	R FACTOR	
SP	TOP-S	BOT-S	TOP-C	TOP-S	BOT-S	FS	TOP-S	BOT-S
1	2357	-2566	75	2636	-3558	20000	0.894	0.721
2	4475	-4872	142	5004	-6752	20000	0.894	0.722
3	6355	-6917	201	7105	-9580	20000	0.894	0.722
4	7996	-8701	252	8936	-12043	20000	0.895	0.722
5	9398	-10224	296	10500	-14141	20000	0.895	0.723
6	10561	-11486	331	11796	-15873	20000	0.895	0.724
7	11456	-12458	359	12794	-17211	20000	0.895	0.724
8	12053	-13110	379	13464	-18124	20000	0.895	0.723
9	12411	-13502	391	13866	-18672	20000	0.895	0.723
10	12531	-13632	395	14000	-18855	20000	0.895	0.723

SHEARS (KIPS) AT SPAN 1/20 POINTS CB-3

SP	GIRDER	P-LOAD	NON-C.	TOT.NC	COMP.	SIDEWK	LIVE LOAD	RR-I
0	4.6	1.3	11.8	17.7	5.0	11.2	0.0 M	0.0
1	4.2	0.7	10.6	15.5	4.5	10.1	0.0 M	0.0
2	3.7	0.7	9.4	13.9	4.0	9.1	0.0 M	0.0
3	3.3	0.7	8.3	12.2	3.5	8.1	0.0 M	0.0
4	2.8	0.7	7.1	10.6	3.0	7.2	0.0 M	0.0
5	2.3	0.7	5.9	8.9	2.5	6.3	0.0 M	0.0
6	1.9	0.7	4.7	7.3	2.0	5.5	0.0 M	0.0
7	1.4	-0.0	3.5	4.9	1.5	4.7	0.0 M	0.0
8	0.9	-0.0	2.4	3.3	1.0	4.0	0.0 M	0.0
9	0.5	-0.0	1.2	1.6	0.5	3.4	0.0 M	0.0
10	0.0	-0.0	-0.0	-0.0	-0.0	2.8	0.0 M	0.0

DEAD LOAD DEFLECTIONS (INCHES) SHEAR

SP	GIRDER	P-LOAD	NON-C.	TOT.NC	COMP.	RANGE(KIPS)	CON.SPAC(IN)
0	0.0	0.0	0.0	0.0	0.0	11.2	19.58
1	0.090	0.018	0.230	0.338	0.064	10.1	21.63
2	0.178	0.036	0.453	0.667	0.125	9.2	23.88
3	0.261	0.053	0.664	0.978	0.184	8.3	26.28
4	0.337	0.069	0.857	1.263	0.237	7.6	28.79
5	0.405	0.083	1.028	1.515	0.285	7.0	31.33
6	0.462	0.095	1.173	1.730	0.325	6.5	33.76
7	0.507	0.104	1.289	1.901	0.357	6.1	35.92
8	0.541	0.111	1.374	2.026	0.380	5.8	37.65
9	0.561	0.115	1.425	2.102	0.395	5.6	38.77
10	0.568	0.117	1.443	2.127	0.399	5.6	39.16

LIVE LOAD DEFLECTIONS (INCHES)

TRUCK	LANE	MILITARY	RAILROAD	SIDEWALK	L/1000
0.0	0.0	0.0	0.0	0.646	0.900

SIMPLE SPAN

STATE HIGHWAY DEPARTMENT OF GEORGIA
BRIDGE DIVISION

10-15-70

IDENTIFICATION

"CONT" TO CONTINUE REMARKS

PROG.	PROB. NO.	PROJECT NO.	COUNTY	DATE	DESIGNER	ETC.	CONT
* B.O.4	CB-4	ANALYZE 33WF118 WITH 1X10X52 PLATE ON A 78 FT SPAN 7-0					CONT
* BEAM SPACING HS15 LOADING WITH SIDEWALK							

SPAN DATA

CODE 1	TYPE	D/A	LIVE LOAD 5 CLASS	T	L	M	SPAN LENGTH 12	DFM 18	DFV 22	DFD 26	NPL 30	WDLNC 32	WDLC 36	WSWK 40	EBEAM X 10^6 44	WT.BM. 48	ALLOW. STRESS 52 STEEL	ALLOW. STRESS 56 CONC.	WT.BM. MAT'L. 60	TYPE STEEL 63
1	CB	1	HS15				78.00	1.273	1.429	08.00	3	.630	.265	.238	2900			1.200	490	588

1 = ANALYSIS (D/A) 1 = SKIP (T, L, M)
BLANK = DESIGN (D/A)

CONCENTRATED LOADS (LIMIT 40)

		X1 3	P1 9	X2 15	P2 21	X3 27	P3 33	X4 39	P4 45
2	1	1950.0	2100	3900.0	2100	5850.0	2100		
2	2								
2	3								
2	4								

CODE: TYPE
RB – ROLLED BEAM
RP – ROLLED W/PLATE
CB – COMPOSITE ROLLED
PG – PLATE GIRDER
CG – COMPOSITE GIRDER
TB – CONCRETE BEAM

STEEL BEAM DATA

ROLLED BEAM: BEAM 1 1 DEPTH & WEIGHT	BEAM 2 9 DEPTH & WEIGHT	P	NP	NON-STANDARD BEAM: SECTION PROPERTIES 18 I_o IN.^{4}	26 YTOP	31 YBOT.	PLATE GIRDER: WEB 36 DEPTH	41 THICK.	TOP FLANGE 46 WIDTH	50 THICK.	BOTTOM FLANGE 55 WIDTH	59 THICK.	CONW	CONT
3 33 WF 118	WF													

1 = CONSTANT THICKNESS (T)
WIDTH (W)

COMPOSITE SLAB: 1 2 EFFECTIVE WIDTH	8 THICK.	13 COPING	SHEAR CONN. 17 ΣZr	21 SU	N 25 ES/EC	BOTTOM COVER PLATE 27 X-BEG.	31 THICK.	36 WIDTH	40 LENGTH	TOP COVER PLATE 46 X-BEG.	50 THICK.	55 WIDTH	59 LENGTH
4 840.00	7.000	0.375	1.789	2865	10	13.00	1.0 0	10.00	52.00				

P = 1 DESIGN WITH PL's
N.P. = 1 DESIGN WITHOUT PL's

CONCRETE BEAM DATA (T, RECT., FLAT SLAB)

"N" 1 TEN.	COM.	NO. ROWS	BEAM (WEB) IN. 8 WIDTH	13 ΔW	DEPTH	ΔD	'T' SLAB 26 WIDTH	THICK.	COMPRESSION ST. 36 NO.	SIZE	Δ	DIST.	ROW ONE 45 NO.	SIZE	Δ	DIST.	ROW TWO 54 NO.	SIZE	Δ	DIST.
3																				

ROW THREE 1 NO.	SIZE	Δ	DIST.	ROW FOUR 11 NO.	SIZE	Δ	DIST.	ROW FIVE 20 NO.	SIZE	Δ	DIST.	ROW SIX 29 NO.	SIZE	Δ	DIST.	ROW SEVEN 38 NO.	SIZE	Δ	DIST.	ROW EIGHT 47 NO.	SIZE	Δ	DIST.	ROW NINE 56 NO.	SIZE	Δ	DIST.
4																											

DIMENSIONS

LENGTH – FT.
WDLNC – K/FT.
WDLC – K/FT.
WT. BM. – K/FT.
COPING – IN.
AL. STRESS – K.S.I.
WT. BM. MAT'L. – PCF
WSWK – K/FT.
X_n – FT.
P_n – KIPS
TYPE STEEL – 572, 588
DEPTH – IN.
THICK. – IN.
WEIGHT – LBS.
YTOP – IN.
ΣZr – K/ROW
X-BEG. – FT.
WIDTH – IN.
YBOT. – IN.
SU – K/EA.
SIZE – BAR SIZE (#4, #10, etc.)
Δ – INCREMENT (NO. OF BARS)
DIST. – IN.

SIMPLE SPAN INPUT DATA PROBLEM NUMBER CB-4

02/03/71 ANALYZE 33WF118 WITH 1X10X52 PLATE ON A 78 FT SPAN 7-0CONT

BEAM SPACING HS15 LOADING WITH SIDEWALK

SPAN DATA

BEAM	D/A	L.L.C.	T L M	LENGTH	D.F.M.	D.F.V.	D.F.D.	NPL
CB	1	HS15	0 0 0	78.000	1.273	1.429	0.800	3

WDLNC	WDLC	SWLL	E	W BM	FS	FC	WG	TYPE STEEL
0.630	0.265	0.238	29.00	0.0	0.0	1.200	0.490	588

CONCENTRATED LOADS

X1	P1	X2	P2	X3	P3	X4	P4
19.500	2.100	39.000	2.100	58.500	2.100	0.0	0.0

BEAM DATA

ROLLED		SECTION PROPERTIES			PLATE GIRDER WEB		TOP FLANGE		BOTTOM FLANGE	
BEAM	P NP	I	Y TOP	Y BOT	D	T	W	T	W	T
33WF118	0 C	0.0	0.0	0.0	0.0	0.0	0.0	0.0	0.0	0.0
OWF	0									

COMPOSITE SLAB

WIDTH	THICKNESS	COPING	SHEAR CAPACITY	ULTIMATE STRENGTH	N=ES/EC
84.000	7.000	0.375	17.89 K/ROW	28.65 KIPS EACH	10

BOTTOM COVER PLATE				TOP COVER PLATE				CONSTANT	
X-BEGIN	THICKNESS	WIDTH	LENGTH	X-BEGIN	THICKNESS	WIDTH	LENGTH	W	T
13.00	1.0000	10.00	52.00	0.0	0.0	0.0	0.0	0	0

SIMPLE SPAN OUTPUT DATA PROBLEM NUMBER CB-4

BEAM PROPERTIES

BEAM	AREA	DEPTH	FL. W	FL. T	WEB T	I
33WF118	34.800	32.860	11.484	0.738	0.554	5900.0

COVER PLATES

BOTTOM COVER PLATE				TOP COVER PLATE			
X-BEGIN	THICKNESS	WIDTH	LENGTH	X-BEGIN	THICKNESS	WIDTH	LENGTH
13.00	1.0000	10.00	52.00	0.0	0.0	0.0	0.0

BEAM WITH PLATES PROPERTIES

AREA	Y-TOP	Y-BOTTOM	I	MIN TERMINAL WELD
44.800	20.209	13.651	8127.3	7/16

COMPOSITE SECTION PROPERTIES

	BEAM ONLY					BEAM WITH PLATES				
N	YTC	YTS	YBS	I	Q SLAB	YTC	YTS	YBS	I	Q SLAB
10	11.05	3.67	29.19	15153.4	443.9	13.91	6.54	27.32	23116.0	612.4
30	16.49	9.11	23.75	11149.4		20.25	12.88	20.98	16116.0	

NUMBER OF SHEAR CONNECTORS NEEDED TO PROVIDE FOR ULTIMATE STRENGTH 124

SIMPLE SPAN OUTPUT DATA PROBLEM NUMBER CB-4

MOMENTS (K-FT.) AT SPAN 1/20 POINTS

SP	GIRDER	P-LOAD	NON-C.	TOT.NC	COMP.	SIDEWK	LIVE LOAD	RR-I
1	20.5	12.3	91.0	123.8	38.3	34.4	138.7 T	0.0
2	39.2	24.6	172.5	236.3	72.6	65.2	260.7 T	0.0
3	56.1	36.9	244.3	337.3	102.8	92.3	367.3 M	0.0
4	71.1	49.1	306.6	426.9	129.0	115.8	460.0 M	0.0
5	83.8	61.4	359.3	504.6	151.1	135.7	537.8 M	0.0
6	94.2	65.5	402.5	562.2	169.3	152.0	600.9 M	0.0
7	102.3	69.6	436.0	607.9	183.4	164.7	649.0 M	0.0
8	108.1	73.7	460.0	641.8	193.5	173.8	682.3 M	0.0
9	111.6	77.8	474.3	663.7	199.5	179.2	700.8 M	0.0
10	112.7	81.9	479.1	673.8	201.5	181.0	704.4 M	0.0

STRESS (PSI) AT SPAN 1/20 POINTS

	MINIMUM STRESS		MAXIMUM STRESS			ALLOWABLE	R FACTOR	
SP	TOP-S	BOT-S	TOP-C	TOP-S	BOT-S	FS	TOP-S	BOT-S
1	4513	-5116	174	5016	-9117	27000	0.900	0.561
2	8606	-9749	328	9554	-17281	27000	0.901	0.564
3	12280	-13899	462	13617	-24520	27000	0.902	0.567
4	13974	-10619	480	15929	-18785	27000	0.877	0.565
5	16506	-12531	562	18792	-22085	27000	0.878	0.567
6	18399	-13976	628	20955	-24654	27000	0.878	0.567
7	19899	-15118	679	22661	-26659	27000	0.878	0.567
8	21005	-15957	715	23911	-28099	27000	0.878	0.568
9	21717	-16494	735	24705	-28975	27000	0.879	0.569
10	22036	-16728	740	25042	-29286	27000	0.880	0.571

SHEARS (KIPS) AT SPAN 1/20 POINTS CB-4

SP	GIRDER	P-LOAD	NON-C.	TOT.NC	COMP.	SIDEWK	LIVE LOAD	RR-I
0	5.5	3.1	24.6	33.2	10.3	9.3	40.0 T	0.0
1	5.0	3.1	22.1	30.3	9.3	8.4	35.7 T	0.0
2	4.6	3.1	19.7	27.4	8.3	7.5	33.7 T	0.0
3	4.1	3.1	17.2	24.5	7.2	6.7	31.8 M	0.0
4	3.6	3.1	14.7	21.4	6.2	5.9	30.0 M	0.0
5	3.0	3.1	12.3	18.4	5.2	5.2	28.2 M	0.0
6	2.4	1.0	9.8	13.2	4.1	4.5	26.3 M	0.0
7	1.8	1.0	7.4	10.2	3.1	3.9	24.5 M	0.0
8	1.2	1.0	4.9	7.1	2.1	3.3	22.7 M	0.0
9	0.6	1.0	2.5	4.1	1.0	2.8	20.8 M	0.0
10	0.0	1.0	0.0	1.1	0.0	2.3	18.8 M	0.0

	DEAD LOAD DEFLECTIONS (INCHES)					SHEAR	
SP	GIRDER	P-LOAD	NON-C.	TOT.NC	COMP.	RANGE(KIPS)	CON.SPAC(IN)
0	0.0	0.0	0.0	0.0	0.0	49.3	12.38
1	0.087	0.059	0.372	0.518	0.080	45.1	13.54
2	0.170	0.117	0.730	1.017	0.156	44.3	13.80
3	0.248	0.171	1.061	1.480	0.227	43.6	14.00
4	0.318	0.219	1.360	1.896	0.290	43.2	15.63
5	0.380	0.262	1.623	2.265	0.346	42.9	15.75
6	0.432	0.299	1.847	2.578	0.393	42.6	15.85
7	0.474	0.328	2.027	2.829	0.431	42.4	15.91
8	0.505	0.349	2.157	3.012	0.459	42.4	15.95
9	0.524	0.362	2.237	3.123	0.476	42.3	15.95
10	0.530	0.367	2.264	3.160	0.482	42.3	15.96

LIVE LOAD DEFLECTIONS (INCHES)

TRUCK	LANE	MILITARY	RAILROAD	SIDEWALK	L/1000
0.644	0.479	0.615	0.0	0.303	0.936

SIMPLE SPAN

IDENTIFICATION

"CONT" TO CONTINUE REMARKS

PROG.	PROB. NO.	PROJECT NO.	COUNTY	DATE	DESIGNER	ETC.	
* B04	CB-5	ANALYZE NON-STANDARD SECTION WITH PLATES TOP & BOTTOM					CONT
* RR80 LOAD							

SPAN DATA

	CODE TYPE	D/A	LIVE LOAD CLASS	T	L	M	SPAN LENGTH	DFM	DFV	DFD	NPL	WDLNC	WDLC	WSWK	EBEAM X 10^6	WT.BM.	ALLOW. STRESS STEEL	ALLOW. STRESS CONC.	WT.BM. MAT'L.	TYPE STEEL
1	CB	1	RR80				78.000	2.000	4.77	2.000	3	.980	.445		29.00	.245	23.00	2.000	490	572

1 = ANALYSIS (D/A) 1 = SKIP (T, L, M)
BLANK = DESIGN (D/A)

CONCENTRATED LOADS (LIMIT 40)

		X1	P1	X2	P2	X3	P3	X4	P4
2	1	195.00	.600	39.000	.600	58.500	.600		
2	2								
2	3								
2	4								

CODE: TYPE
RB – ROLLED BEAM
RP – ROLLED W/PLATE
CB – COMPOSITE ROLLED
PG – PLATE GIRDER
CG – COMPOSITE GIRDER
TB – CONCRETE BEAM

STEEL BEAM DATA

	ROLLED BEAM: BEAM 1 DEPTH & WEIGHT	ROLLED BEAM: BEAM 2 DEPTH & WEIGHT	P	NP	NON-STANDARD BEAM: SECTION PROPERTIES I_o IN.^4	YTOP	YBOT.	PLATE GIRDER: WEB DEPTH	WEB THICK.	TOP FLANGE WIDTH	TOP FLANGE THICK.	BOTTOM FLANGE WIDTH	BOTTOM FLANGE THICK.	CONW	CONT
3	W.F	W.F			31104.0	3600.00	3600.00								

1 = CONSTANT THICKNESS (T) WIDTH (W)

	COMPOSITE SLAB: EFFECTIVE WIDTH	THICK.	COPING	SHEAR CONN. ΣZ_r	SU	N ES/EC	BOTTOM COVER PLATE X-BEG.	THICK.	WIDTH	LENGTH	TOP COVER PLATE X-BEG.	THICK.	WIDTH	LENGTH
4	84.000	7.000	2.375	17.89	28.65	10	0.00	4.0	0	18.00	78.000	0.00	2.0	0

4	18.00	78.000	0.00	2.0	0	18.00	78.000	

P = 1 DESIGN WITH PL'S
N.P. = 1 DESIGN WITHOUT PL'S

CONCRETE BEAM DATA (T, RECT., FLAT SLAB)

	"N" TEN.	"N" COM.	NO. ROWS	BEAM (WEB) IN. WIDTH	ΔW	DEPTH	ΔD	'T' SLAB WIDTH	THICK.	COMPRESSION ST. NO.	SIZE	Δ	DIST.	ROW ONE NO.	SIZE	Δ	DIST.	ROW TWO NO.	SIZE	Δ	DIST.
3																					

	ROW THREE NO.	SIZE	Δ	DIST.	ROW FOUR NO.	SIZE	Δ	DIST.	ROW FIVE NO.	SIZE	Δ	DIST.	ROW SIX NO.	SIZE	Δ	DIST.	ROW SEVEN NO.	SIZE	Δ	DIST.	ROW EIGHT NO.	SIZE	Δ	DIST.	ROW NINE NO.	SIZE	Δ	DIST.
4																												

DIMENSIONS

LENGTH – FT.
WDLNC – K/FT.
WDLC – K/FT.
WT. BM. – K/FT.
COPING – IN.
AL. STRESS – K.S.I.
WT. BM. MAT'L. – PCF
WSWK – K/FT.
X_n – FT.
P_n – KIPS.
TYPE STEEL – 572, 588
DEPTH – IN.
THICK. – IN.
WEIGHT – LBS.
YTOP – IN.
ΣZ_r – K/ROW
X-BEG. – FT.
WIDTH – IN.
YBOT. – IN.
SU – K/EA.
SIZE – BAR SIZE (#4, #10, etc.)
Δ – INCREMENT (NO. OF BARS)
DIST. – IN.

SIMPLE SPAN INPUT DATA PROBLEM NUMBER CB-5

02/03/71 ANALYZE NON-STANDARD SECTION WITH PLATES TOP & BOTTOM CONT

RR80 LOAD

SPAN DATA

BEAM	D/A	L.L.C.	T L M	LENGTH	D.F.M.	D.F.V.	D.F.D.	NPL
CB	1	RR80	0 0 0	78.000	2.000	0.477	2.000	3

WDLNC	WDLC	SWLL	E	W BM	FS	FC	WG	TYPE STEEL
0.980	0.445	0.0	29.00	0.245	23.00	2.000	0.490	572

CONCENTRATED LOADS

X1	P1	X2	P2	X3	P3	X4	P4
19.500	0.600	39.000	0.600	58.500	0.600	0.0	0.0

BEAM DATA

ROLLED		SECTION PROPERTIES			PLATE GIRDER WEB		TOP FLANGE		BOTTOM FLANGE	
BEAM	P NP	I	Y TOP	Y BOT	D	T	W	T	W	T
OWF	0 0 0	31104.0	36.000	36.000	0.0	0.0	0.0	0.0	0.0	0.0
OWF	0									

COMPOSITE SLAB

WIDTH	THICKNESS	COPING	SHEAR CAPACITY	ULTIMATE STRENGTH	N=ES/EC
84.000	7.000	2.375	17.89 K/ROW	28.65 KIPS EACH	10

BOTTOM COVER PLATE				TOP COVER PLATE				CONSTANT	
X-BEGIN	THICKNESS	WIDTH	LENGTH	X-BEGIN	THICKNESS	WIDTH	LENGTH	W	T
0.0	4.0000	18.00	78.00	0.0	2.0000	18.00	78.00	0	0

SIMPLE SPAN OUTPUT DATA PROBLEM NUMBER CB-5

BEAM PROPERTIES

BEAM	AREA	DEPTH	FL. W	FL. T	WEB T	I
OWF 0	72.000	72.000	0.0	0.0	0.0	31104.0

COVER PLATES

BOTTOM COVER PLATE				TOP COVER PLATE			
X-BEGIN	THICKNESS	WIDTH	LENGTH	X-BEGIN	THICKNESS	WIDTH	LENGTH
0.0	4.0000	18.00	78.00	0.0	2.0000	18.00	78.00

BEAM WITH PLATES PROPERTIES

AREA	Y-TOP	Y-BOTTOM	I	MIN TERMINAL WELD
180.000	45.800	32.200	173512.8	16/16

COMPOSITE SECTION PROPERTIES

	BEAM ONLY					BEAM WITH PLATES				
N	YTC	YTS	YBS	I	Q SLAB	YTC	YTS	YBS	I	Q SLAB
10	40.94	33.57	44.43	283120.9	2201.7	40.94	33.57	44.43	283120.9	2201.7
30	48.30	40.92	37.08	217208.4		48.30	40.92	37.08	217208.4	

NUMBER OF SHEAR CONNECTORS NEEDED TO PROVIDE FOR ULTIMATE STRENGTH 206

SIMPLE SPAN OUTPUT DATA PROBLEM NUMBER CB-5

MOMENTS (K-FT.) AT SPAN 1/20 POINTS

SP	GIRDER	P-LOAD	NON-C.	TOT.NC	COMP.	SIDEWK	LIVE LOAD	RR-I
1	88.5	3.5	141.6	233.6	64.3	0.0	1725.2 R	822.9
2	167.7	7.0	268.3	443.0	121.8	0.0	3148.2 R	1501.7
3	237.6	10.5	380.1	628.2	172.6	0.0	4402.7 R	2100.1
4	298.1	14.0	477.0	789.1	216.6	0.0	5451.8 R	2600.5
5	349.4	17.5	559.0	925.9	253.8	0.0	6278.0 R	2994.6
6	391.3	18.7	626.0	1036.0	284.3	0.0	6959.0 R	3319.5
7	423.9	19.9	678.2	1122.0	308.0	0.0	7512.7 R	3583.6
8	447.2	21.1	715.5	1183.7	324.9	0.0	7944.3 R	3789.4
9	461.1	22.2	737.8	1221.2	335.0	0.0	8197.5 R	3910.2
10	465.8	23.4	745.3	1234.5	338.4	0.0	8258.0 R	3939.1

STRESS (PSI) AT SPAN 1/20 POINTS

	MINIMUM STRESS		MAXIMUM STRESS			ALLOWABLE	R FACTOR	
SP	TOP-S	BOT-S	TOP-C	TOP-S	BOT-S	FS	TOP-S	BOT-S
1	885	-651	447	4510	-5450	23000	0.196	0.120
2	1678	-1236	817	8294	-9992	23000	0.202	0.124
3	2379	-1752	1143	11632	-13998	23000	0.205	0.125
4	2989	-2201	1416	14446	-17365	23000	0.207	0.127
5	3506	-2581	1631	16699	-20044	23000	0.210	0.129
6	3924	-2889	1808	18548	-22246	23000	0.212	0.130
7	4250	-3129	1953	20037	-24026	23000	0.212	0.130
8	4483	-3301	2065	21178	-25398	23000	0.212	0.130
9	4625	-3405	2130	21852	-26207	23000	0.212	0.130
10	4675	-3442	2146	22029	-26412	23000	0.212	0.130

SHEARS (KIPS) AT SPAN 1/20 POINTS CB-5

SP	GIRDER	P-LOAD	NON-C.	TOT.NC	COMP.	SIDEWK	LIVE LOAD	RR-I
0	23.9	0.9	38.2	63.0	17.4	0.0	486.8 R	232.2
1	21.5	0.9	34.4	56.8	15.6	0.0	442.4 R	211.0
2	19.1	0.9	30.6	50.6	13.9	0.0	398.8 R	190.2
3	16.7	0.9	26.8	44.4	12.1	0.0	356.5 R	170.0
4	14.3	0.9	22.9	38.2	10.4	0.0	317.9 R	151.7
5	11.9	0.9	19.1	32.0	8.7	0.0	281.9 R	134.5
6	9.6	0.3	15.3	25.1	6.9	0.0	249.0 R	118.8
7	7.2	0.3	11.5	18.9	5.2	0.0	218.6 R	104.3
8	4.8	0.3	7.6	12.7	3.5	0.0	188.8 R	90.1
9	2.4	0.3	3.8	6.5	1.7	0.0	160.4 R	76.5
10	0.0	0.3	0.0	0.3	0.0	0.0	132.7 R	63.3

DEAD LOAD DEFLECTIONS (INCHES) SHEAR

SP	GIRDER	P-LOAD	NON-C.	TOT.NC	COMP.	RANGE(KIPS)	CON.SPAC(IN)
0	0.0	0.0	0.0	0.0	0.0	486.8	4.73
1	0.016	0.001	0.026	0.043	0.009	442.4	5.20
2	0.032	0.002	0.051	0.084	0.018	398.8	5.77
3	0.047	0.002	0.075	0.123	0.027	356.5	6.45
4	0.060	0.003	0.096	0.159	0.035	317.9	7.24
5	0.072	0.003	0.116	0.191	0.042	281.9	8.16
6	0.082	0.004	0.132	0.218	0.048	249.0	9.24
7	0.091	0.004	0.145	0.240	0.053	218.6	10.52
8	0.097	0.005	0.154	0.256	0.056	188.8	12.19
9	0.100	0.005	0.160	0.265	0.058	160.4	14.34
10	0.101	0.005	0.162	0.268	0.059	132.7	17.34

LIVE LOAD DEFLECTIONS (INCHES)

TRUCK	LANE	MILITARY	RAILROAD	SIDEWALK	L/ 640
0.0	0.0	0.0	1.627	0.0	1.462

V. PLATE GIRDER (PG)

A plate girder is any non-composite beam made entirely of plates. Refer to the input data form in the following discussion of the input data. Also refer to the figure on page 5-19.

INPUT DATA

A. IDENTIFICATION (*in c.c. 1).

The IDENTIFICATION lines are used to supply any pertinent information about the bridge that the Engineer wishes to head the output listing. The project number, county, date, and the designer's name or initials should always be given. Card columns 2-4 of the first line are reserved for the program number.

Card columns 5-8 of the first line are reserved for the problem number. This space is always left blank by the Engineer since the problem number is assigned from the log book of the Bridge Division computer problems. The problem number is associated with any error messages and appears on the output listing.

Any number of IDENTIFICATION lines may be used to enter remarks, etc. Whenever more than one line (card) is used, the code "CONT" must be entered in card columns 65-68 of all lines (cards), except the last line, to indicate to the program that another IDENTIFICATION card will follow. If only one line (card) of IDENTIFICATION is used, "CONT" is not required.

B. SPAN DATA (1 in c.c. 1).

The SPAN DATA card gives information relating to the span, generally without regard to the type of beam under consideration. The digit one (1) in card column one is used for identification and is of no significance to the Engineer.

1. CODE (c.c. 2-4) Form: PGX

   a. TYPE (c.c. 2,3) Form: PG

      Enter the TYPE of beam in card columns 2,3. PG defines a non-composite beam made entirely of plates.

   b. D/A (c.c. 4) Form: X (blank or 1).

      The digit one (1) indicates that a given section is to be analyzed and, a blank (or zero) indicates that the beam is to be designed (determined). Any other character is illegal.

2. LIVE LOAD (c.c. 5-11). This input data defines the class of live load and the various loads that are to be omitted.

   a. CLASS (c.c. 5-8)

      The LIVE LOAD CLASS is entered in card columns 5-8, i.e., HS20, H 15, RR80, etc. Following are the live loads considered by the program.

      HS20* (AASHO designation HS20-44)

      HS15 (AASHO designation HS15-44)

      H 20 (AASHO designation H20-44)

      H 15 (AASHO designation H15-44)

      H 10 (AASHO designation H10-44)

      (*These numbers can be increased or decreased by any amount check the overstress provisions of the AASHO Specifications.)

      The program uses 80% of the input value for the largest wheel

load. Uniform lane load and concentrated lane loads are proportioned accordingly. Moments are computed with the wheel loads adjusted by impact and distribution factor for moments (DFM). For the end reaction, the wheel at the support is adjusted by the impact factor and the distribution factor for shear (DFV).

Intermediate shear values are computed with the wheel loads adjusted by the impact factor for the loaded span and the distribution factor for moments. Deflections are a function of the wheel loads adjusted by the impact factor and the distribution factor for deflections(DFD).

Railroad live loads:

RR80 (AREA Cooper E 80 load).

RR72 (AREA Cooper E 72 load).

RR** (AREA Cooper E ** load).

The program computes the moments, shears, and approximates the deflection for one rail adjusted by impact and distribution factors using one-half of the input value (80,72, etc.) as the largest wheel load.

b. T (c.c. 9) Form: X (blank or 1).

The truck live load can be eliminated from consideration by entering the digit one (1) in card column 9 when using a standard highway loading. Leave blank if truck loading is to be considered.

c. L (c.c. 10) Form: X (blank or 1).

The lane live load can be eliminated from consideration by entering the digit one (1) in card column 10 when using a standard highway loading. Leave blank if lane loading is to be considered.

d. M (c.c. 11) Form: X (blank or 1).

The military live load can be eliminated from consideration by entering the digit one (1) in card column 11 when using a standard highway loading. Leave blank if military loading is to be considered.

Sidewalk live load only can be achieved by placing 111 in T, L, M (c.c. 9, 10, 11) with a standard highway load. This eliminates the truck, lane, and military from consideration leaving the sidewalk load as the only live load when computing moments, stresses, shears and deflections.

The omission of truck, lane, and military live load has no meaning when railroad live load is designated.

3. LENGTH (c.c. 12-17) Form: XXX.XXX feet.

LENGTH is the design span length in feet from center line of bearing to center line of bearing.

4. DFM (c.c. 18-21) Form: X.XXX ratio.

DFM, the distribution factor for moments, is the proportion of one row of wheels for highway and railroad loadings acting on the beam for moment and intermediate shear. This factor cannot be zero.

5. DFV (c.c. 22-25) Form: X.XXX ratio.

DFV, the distribution factor for end shear, is the proportion of one wheel on the beam at the end support for highway live load. When railroad live load is indicated, DFV is the amount the loads are increased for impact.

6. DFD (c.c. 26-29) Form: X.XXX ratio.

DFD, the distribution factor for deflections, is the proportion

of one row of wheels for highway and railroad live loadings acting on the beam for calculating live load deflections. DFD is completely independent of DFM or DFV.

7. NPL (c.c. 30,31) Form: XX (1-40).

NPL is the number of concentrated loads in the span.

A maximum of forty is available.

8. WDLnc (c.c. 32-35) Form: X.XXX kips per foot.

WDLnc is the weight of the uniform dead load (slab, coping, curb, handrail, utilities, etc.) in kips per foot. The weight of the beam should not be included since the weight of the beam is computed by the program.

9. WDLc (c.c. 36-39) Form: X.XXX kips per foot.

WDLc is used to separate dead loads when necessary, i.e., the weight of future paving or future construction. The value placed in WDLc is used to compute total stresses in the analysis and design process, but the moments, shears, and deflections will not be added to the total moments, shears, and deflections in the output data.

10. WSWK (c.c. 40-43) Form: X.XXX kips per foot.

WSWK is the uniform sidewalk live load in kips per foot. In a design problem, the deflection resulting from this load is added to the highway (H, HS) or railroad (RR) live load deflection when checking to see if the allowable live load deflection (L/1000) is exceeded. It is assumed that the maximum sidewalk deflection and the maximum highway or railroad deflection would be coincidental.

11. E BEAM x 10^6 (c. c. 44-47) Form: XX.XX mpsi.

This is the Modulus of Elasticity of the beam material in million pounds per square inch, and is used in computing deflections. If a value of E equal to zero (0) is entered or this data field is left

blank, the program will by-pass all computations for deflections.

12. WT.BM. (c.c. 48-51) Form: X.XXX kips per foot.

This is the uniform weight of the NON-STANDARD BEAM specified with "SECTION PROPERTIES" and is not used with the Plate Girder (PG) code.

13. ALLOWABLE STRESS (c.c. 52-59)

a. STEEL (c.c. 52-55) Form: XX.XX ksi.

STEEL is the allowable stress in ksi in the beam to determine which grade of A572 to consider, or the ALLOWABLE STRESS FOR OTHER grades or metals. If this is left blank TYPE STEEL will govern the allowable stress. The allowable steel stress is not required for A36, or A588, types of steel.

b. CONC (c.c. 56-59) Form: X.XXX ksi.

This is the allowable stress in ksi in the concrete. Therefore, this data is not required with a Plate Girder (PG) span.

14. WT.BM.MAT'L (c.c. 60-62) Form: XXX pounds per cu. ft.

This is the weight of the beam material in pounds per cubic foot. This data is required for the Plate Girder (PG) span if the plates weigh other than 490 pounds per cubic foot.

15. TYPE STEEL (c.c. 63-65) Form: XXX (36,588, etc.)

The program has provisions to use A36 (enter 36),A588 (enter 588), A572 (enter 572), or A514 (enter 514). When type A572 is used the ALLOW. STRESS (STEEL card columns 52-55) must be given to show which grade is to be considered. If STEEL (c.c. 52-55) and TYPE STEEL (c.c. 63-65) are both blank, type A36 steel allowable stresses are used.

C. CONCENTRATED LOADS (2 in c.c. 1)

Card columns one and two are used to keep the cards in sequence and contain 21, 22, 25, etc. up to 30. The input data form shows four cards (the program has provisions for ten). When necessary, write between the lines or attach extra forms to provide space for the required CONCENTRATED LOADS.

1. Xn (c.c. 3-8, 15-20, 27-32, 39-44) Form: XXX.XXX feet.

   Xn is the distance in feet from the left support to the concentrated load (diaphragm, handrail post, utility pole, sign, etc.) Pn. The maximum number of loads is forty. The distance may or may not be of increasing magnitude from the left support.

2. Pn (c.c. 9-14, 21-26, 33-38, 45-50) Form: XXX.XXX kips.

   Pn is the concentrated load in kips.

D. STEEL BEAM DATA (3 in c.c. 1)

Ignore the Rolled Beam and Non-Standard Beam input data (c.c. 2-35) of the STEEL BEAM DATA card when analyzing or designing a Plate Girder (PG).

1. PLATE GIRDER (c.c. 36-65)

a. WEB (c.c. 36-45)

WEB governs the plate girder web for the full length of the span.

(A) DEPTH (c.c. 36-40) Form: XXX.XX inches.

DEPTH is the depth of the web in inches. If DEPTH is blank or zero, the program uses L/25 rounded up to the even foot as the DEPTH.

(B) THICK (c.c. 41-45) Form: X.XXXX inches.

THICK is the thickness in inches of the web. If THICK is left blank or zero, a thickness which requires no longitudinal stiffeners is computed.

b. TOP FLANGE (c.c. 46-54)

The top flange governs the width and thickness of the top plate for the distance X-BEG (TOP COVER PLATE).

(A) WIDTH (c.c. 46-49) Form: XX.XX inches.

WIDTH is the width in inches of the top flange. If blank or zero, 12 inches is used for the first trial design.

(B) THICK (c.c. 50-54) Form: X.XXXX inches.

THICK is the thickness in inches of the top flange. If blank or zero, 0.5 inches is used for the first trial design.

c. BOTTOM FLANGE (c.c. 55-63)

The bottom flange governs the width and thickness of the

bottom plate for the distance X-BEG (BOTTOM COVER PLATE).

(A) WIDTH (c.c. 55-58) Form: XX.XX inches.

WIDTH is the width of the bottom flange. If blank or zero, 12.0 inches is used for the first trial design.

(B) THICK (c.c. 59-63) Form: X.XXXX inches.

THICK is the thickness in inches of the bottom flange. If blank or zero, 0.5 inches is used for the first trial design.

d. CON (W,T) (c.c. 64,65)

These codes are used by the designers if they wish the top and bottom plates to have the same width or thickness throughout.

(A) CON W (c.c. 64) Form: X (1 or blank)

If CON W is equal to one the FLANGE plate and the COVER PLATE will have the same width.

(B) CON T (c.c. 65) Form: X (1 or blank)

If CON T is equal to one the FLANGE plate and the COVER PLATE will have the same thickness.

E. COVER PLATE DATA (4 in c.c. 1) This card is always needed.

By using flange plates and cover plates, it is possible to design and/or analyze a Plate Girder with two changes in section properties.

1. BOTTOM COVER PLATE (c.c. 27-45)

a. X-BEG (c.c. 27-30) Form: XX.XX feet.

X-BEG is the distance in feet to the beginning of the bottom cover plate from the left support. X-BEG is also the length of the bottom flange on the left side. In a design problem (D/A=0), this

distance is computed by the program.

b. THICK (c.c. 31-35) Form: X.XXXX inches.

THICK is the thickness in inches of the plate used on the bottom of the web at the end of X-BEG for a distance LENGTH (c.c. 40-45). If zero or blank is input, 0.5 inch is used as the first trial design(D/A=0) with a maximum of 1.5 inches or 4.0 inches depending on the grade of steel.

c. WIDTH (c.c. 36-39) Form: XX.XX inches.

WIDTH is the width in inches of the plate described in b. above. If blank or zero is input, a plate 12.0 inches wide is used for the first trial design.

d. LENGTH (c.c. 40-45) Form: XXX.XXX feet.

LENGTH is the length in feet of the plate described in b. above. The program computes this length in a design problem.

2. TOP COVER PLATE (c.c. 46-64)

The top cover plate is used to make possible a change in the top flange width or thickness or both.

a. X-BEG (c.c. 46-49) Form: XX.XX feet.

X-BEG is the distance in feet to the beginning of the top plate from the left support. X-BEG is the length of the TOP FLANGE on the left side of the span.

b. THICK (c.c. 50-54) Form: X.XXXX inches.

THICK is the thickness in inches of the top plate. If blank or zero, 0.5 inches is used for first trial design.

c. WIDTH (c.c. 55-58) Form: XX.XX inches.

WIDTH is the width in inches of the top plate. When the problem is a design problem (D/A=0) the section is made symmetrical, the top and bottom plates are the same.

d. LENGTH (c.c. 59-64) Form: XXX.XXX feet.

LENGTH is the length in feet of the top plate. In a design problem this length is computed by the program.

Note: The "flange" plate is located at the ends of the girder and the "cover" plate is located in the center portion of the span. This concept is used so that a plate girder with a change in plate size can be analyzed or designed. If there is no variation in the plate size, the flange plate and cover plate are synonymous. Note also that the web plate is not allowed to vary in thickness or depth.

PLATE GIRDER

OUTPUT DATA

A. The first page of the output listing contains the input data and should be checked to verify that the proper quantities were punched in the input data cards.

B. The second page of the output listing tabulates the PLATE GIRDER PROPERTIES WEB AND COVER PLATES, WEB WITH COVER PLATES PROPERTIES, LONGITUDINAL STIFFENERS, AND TRANSVERSE STIFFENERS.

1. PLATE GIRDER PROPERTIES

   a. WEB

      1) DEPTH is the web depth in inches.

      2) THICK is the web thickness in inches.

   b. TOP FLANGE

      1) WIDTH is top flange width in inches.

      2) THICK is the top flange thickness in inches

   c. BOTTOM FLANGE

      1) WIDTH is the width in inches of the bottom flange.

      2) THICK is the bottom flange thickness in inches.

   d. WEB AND FLANGES PROPERTIES

      1) AREA is the area in square inches of the WEB and FLANGES.

      2) Y-TOP and Y-BOTTOM are the distances to the top and bottom of the flange from the neutral axis.

      3) I is the moment of inertia in inches to the fourth power of

the flanges and web.

e. WEB AND COVER PLATES heads top and bottom cover plate dimensions.

1) X-BEG is the distance in feet from the left support to the beginning of the BOTTOM/TOP COVER PLATE.

2) THICKNESS is the COVER PLATE thickness in inches.

3) WIDTH is the COVER PLATE width in inches.

4) LENGTH is the COVER PLATE length in feet.

f. WEB WITH COVER PLATES PROPERTIES

1) AREA is the area in square inches of the web with cover plates.

2) Y-TOP and Y-BOTTOM are the distances to the top and bottom of the cover plates from the neutral axis.

3) I is the moment of inertia in inches to the fourth power of the web and cover plates.

g. NUMBER OF LONGITUDINAL STIFFENERS NEEDED

If longitudinal stiffeners are required a (1) one is printed here. Zero (0) indicates no longitudinal stiffeners are required. The program assumes one (1) is the maximum required.

h. TRANSVERSE STIFFENER SPACING (INCHES) AT SPAN 1/20 POINTS gives transverse stiffener spacing in inches. When stiffeners are not required, TRANSVERSE STIFFENERS NOT REQUIRED, is printed. When the output distance is zero (0.0) stiffeners are not required at this point.

C. The third page of the output listing tabulates the MOMENTS (K-FT.) and the STRESS (PSI) at the 1/20th points in the span for the left half of the span.

1. MOMENTS (K-FT.) AT SPAN 1/20 POINTS.

   a. SP lists the span points in 20ths.

   b. GIRDER lists the moments in kip-feet due to the weight of the girder only.

   c. P-LOAD lists the moments in kip-feet due to the concentrated loads only.

   d. NON-C lists the moments in kip-feet due to the uniform dead load (WDLnc) only.

   e. TOT.NC lists the sum of the GIRDER, P-LOAD, and NON-C moments in kip-feet.

   f. COMP. lists the moments in kip-feet due to the uniform dead load input (WDLc) only.

   g. SIDEWK lists the moments in kip-feet due to the sidewalk live load.

   h. LIVE LOAD lists the moments in kip-feet due to the live load. Moments due to highway live loads include impact while railroad moments do not include impact. The letter code after the moment indicates the type of live load that governs as follows:

      1) T designates the moment is due to the truck live load.

      2) L designates the moment is due to the lane live load.

      3) M designates the moment is due to the military live load.

      4) R designates the moment is due to the railroad live load.

   i. RR-I lists the moment in kip-feet due to railroad impact and is considered for railroad live load only.

2. STRESS (PSI) AT SPAN 1/20 POINTS.

   A positive stress indicates compression. A negative stress indicates tension.

a. MINIMUM STRESS

1) SP lists the span point in 20ths.

2) TOP-S lists the minimum stress in psi at the top of the girder due to the dead loads.

3) BOT-S lists the minimum stress in psi at the bottom of the girder due to the dead loads.

b. MAXIMUM STRESS: If the problem is a design, the maximum stress should not exceed the allowable stress.

1) TOP-C lists the maximum stress in psi at the top of the concrete for a composite beam. For a plate girder (PG) this has a value of zero (0).

2) TOP-S lists the maximum stress in psi at the top of the girder due to the dead and live loads.

3) BOT-S lists the maximum stress in psi at the bottom of the girder due to the dead and live loads.

c. ALLOWABLE FS*lists the allowable stress in the steel (base metal) considering the type of steel. Fatigue is not considered in the design, i.e., base metal adjacent to continuous flange-web fillet welds does not control base metal allowable stress in simple spans.

d. R FACTOR

1) TOP-S lists the ratio of the minimum stress to the maximum stress at the top of the plate.

2) BOT-S lists the ratio of the minimum stress to the maximum stress at the bottom of the plate.

*Fatigue for base metal adjacent to butt weld is considered in ending cover plates.

D. The fourth page of the output listing tabulates the SHEARS, (KIPS), the DEAD LOAD DEFLECTIONS (INCHES), the SHEAR RANGE (KIPS), the SHEAR CON. SPAC (IN), and the LIVE LOAD DEFLECTIONS (INCHES).

1. SHEARS (KIPS) AT SPAN 1/20 POINTS.

   a. SP lists the span point in 20ths.

   b. GIRDER lists the shears in kips due to the weight of the girder only.

   c. P-LOAD lists the shears in kips due to the concentrated loads only.

   d. NON-C lists the shears in kips due to the uniform dead load only (WDLnc).

   e. TOT. NC lists the total of GIRDER, P-LOAD, and NON-C.

   f. COMP. lists the shears in kips due to the uniform dead load given as WDLc.

   g. SIDEWK lists the maximum positive shears in kips due to the sidewalk live load.

   h. LIVE LOAD lists the maximum shears due to the standard highway or railroad live load. Shears due to highway live loads include impact while railroad shears do not include impact. The letter code after the shear value indicates the type of live load which controlled as follows:

      1) T designates the shear is due to the truck live load.

      2) L designates the shear is due to the lane live load.

      3) M designates the shear is due to the military live load.

      4) R designates the shear is due to the railroad live load.

   i. RR-I lists the shears due to railroad impact and is considered with railroad live load only.

2. DEAD LOAD DEFLECTIONS (INCHES)

   a. SP lists the span points in 20ths.

   b. GIRDER lists the deflection in inches due to the girder only.

   c. P-LOAD lists the deflection in inches due to the concentrated loads only.

   d. NON-C lists the deflection in inches due to the uniform dead load (WDLnc) only.

   e. TOT.NC. lists the total of GIRDER, P-LOAD, and NON-C.

   f. COMP. lists the deflection due to the uniform dead load input in WDLc.

3. SHEAR

   a. RANGE (KIPS) lists the difference in the minimum and maximum shear envelopes (excluding dead loads). The loading condition creating the maximum positive shear is listed (T,L,M,R) under LIVE LOAD and SIDEWK. The loading condition creating the maximum negative shear is not identified. Therefore, the RANGE (KIPS) may be sidewalk combined with truck and lane, lane and military, or truck and military, depending on which loading condition results in the maximum negative shear and whether it is a different loading condition than results in the maximum positive shear.

   b. CON.SPA (IN) lists the shear connector spacing for composite construction. For a plate girder, this is assigned a zero (0) value.

4. LIVE LOAD DEFLECTIONS (INCHES).

   The live load deflections take into consideration impact (50/(L + 125) or 30% maximum for highway live loads and input (DFV) for railroad live loading), and the distribution factor (DFD) for deflections. If the problem is a design, the maximum live load deflection should not exceed

the allowable live load deflection.

a. TRUCK lists the maximum deflection in inches at the center line of the span due to the specified (H or HS) truck loading.

b. LANE lists the maximum deflection in inches at the center line of the span due to the specified lane loading.

c. MILITARY lists the maximum deflection in inches at the center line of the span due to the military loading.

d. RAILROAD lists the deflection in inches computed by treating the maximum distributed moment, plus impact, due to the specified railroad live load at the center line of the span as the middle ordinate of a parabolic moment diagram. The beam is loaded with the resulting M/EI diagram and the center line deflection is computed by Simpson's rule for numerical integration. The results compare favorably (conservative by about 5%) with the deflection computed by using the actual M/EI diagram for the maximum moment at the centerline of a one hundred foot span.

e. SIDEWALK lists the deflection in inches at the center line of the span due to the sidewalk live load.

f. L/800 lists the allowable deflection in inches for highway live loads as the length of the span divided by eight hundred.
L/640 lists the allowable deflection in inches for railroad live loads as the length of the span divided by six hundred forty.
L/1000 lists the allowable deflection in inches when the sidewalk is loaded, as the length of the span divided by one thousand.

PLATE GIRDER

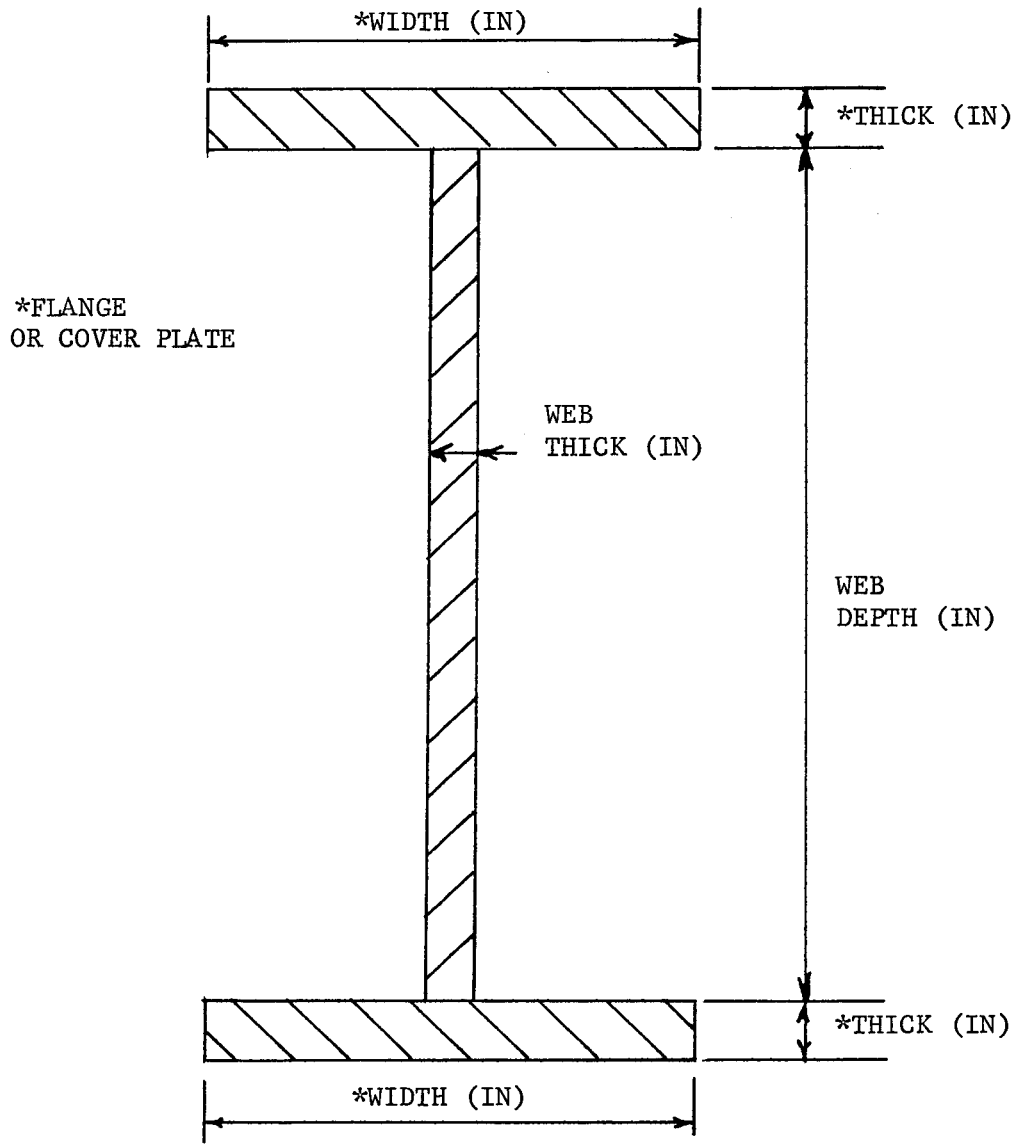

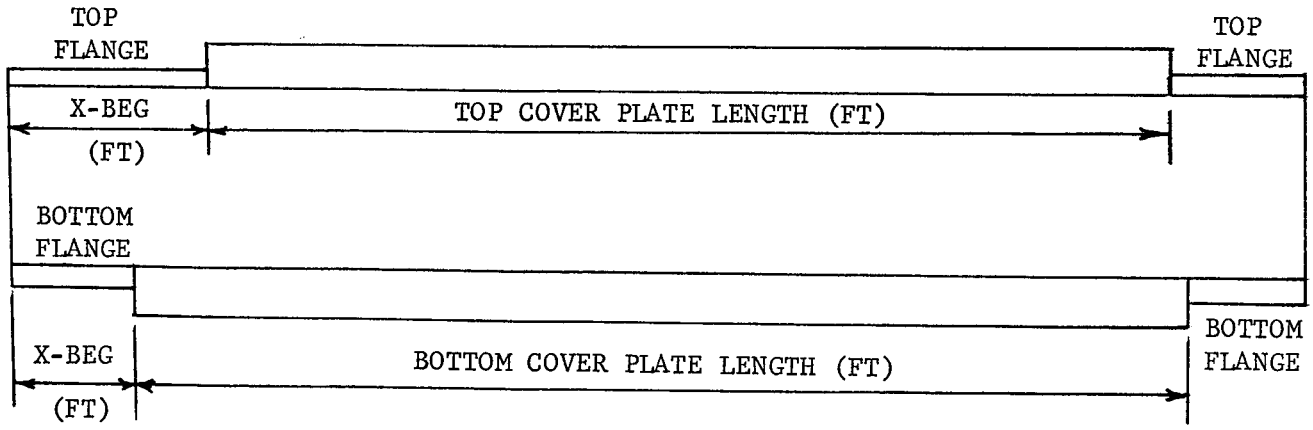

PLATE GIRDER

EXAMPLE PROBLEMS

The following example problems illustrate some uses of the program.

1. Design a girder using L/25 to determine the web depth and let the program also compute the web thickness along with the flange and plate dimensions. (See example PG-1 on page 5-22.)
2. Design a girder giving the preferred web depth. The program then computes web thickness, flange and plate dimensions. (See example PG-2 on page 5-27.)
3. Design a girder using the input web dimensions and the plate dimensions as minimum or starting sizes. (See example PG-3 on page 5-32.)
4. Analyze a given plate girder. (See example PG-4 on page 5-37.)
5. Design a girder giving length and loads only. (See example PG-5 on page 5-42.)

The following live loading conditions are explored.

1. H20 excluding military, see example PG-1 on page 5-22.
2. HS20, see example PG-2 on page 5-27.
3. HS15 with sidewalk, see example PG-3 on page 5-32.
4. RR72 (Cooper E-72), see example PG-4 on page 5-37.
5. HS00, excluding military (sidewalk live load only), see example PG-5 on page 5-42.

The allowable steel stresses are examined as indicated.

1. Type A36 steel, see example PG-2 on page 5-27.

2. Type A588 steel, see example PG-3 on page 5-32.

3. Type A572 steel, see example PG-1 on page 5-22.

To illustrate how the flanges and cover plates can have a constant width, the thickness is allowed to vary, see example PG-1 on page 5-22.

To show how the flanges and cover plates can have a constant thickness, i.e., the width is allowed to vary, see example PG-2 on page 5-27.

To illustrate how the flanges and cover plates can have the same dimensions in a design problem, see example PG-3 on page 5-32.

What happens when both width and thickness are allowed to vary is shown in example PG-5 on page 5-42.

SIMPLE SPAN

IDENTIFICATION

"CONT" TO CONTINUE REMARKS

PROG.	PROB. NO.	PROJECT NO.	COUNTY	DATE	DESIGNER	ETC.	
* B04	PG-1	USE L/25 TO DETERMINE DEPTH OF WEB DESIGN PLATE GIRDER					CONT
* KEEPING THE PLATE WIDTH CONSTANT (VARY THE THICKNESS)							

SPAN DATA

CODE			LIVE LOAD				SPAN LENGTH	DFM	DFV	DFD	NPL	WDLNC	WDLC	WSWK	E BEAM X 10^6	WT.BM.	ALLOW. STRESS		WT.BM. MAT'L.	TYPE STEEL
	TYPE	D/A	CLASS	T	L	M											STEEL	CONC.		
1	PG	0	H 20			1	104.0.0.0	1.273	1.429	1.273	3	.644	.265	.	29.00	.	27.00	.	490	572

1 = ANALYSIS (D/A) 1 = SKIP (T, L, M)
BLANK = DESIGN (D/A)

CONCENTRATED LOADS (LIMIT 40)

		X1	P1	X2	P2	X3	P3	X4	P4
2	1	25.0.0.0	2.100	52.00.0	2.100	78.0.00	2.100		
2	2								
2	3								
2	4								

CODE: TYPE
RB – ROLLED BEAM
RP – ROLLED W/PLATE
CB – COMPOSITE ROLLED
PG – PLATE GIRDER
CG – COMPOSITE GIRDER
TB – CONCRETE BEAM

STEEL BEAM DATA

ROLLED BEAM						NON-STANDARD BEAM			PLATE GIRDER							
BEAM 1			BEAM 2				SECTION PROPERTIES			WEB		TOP FLANGE		BOTTOM FLANGE		CONW	CONT
DEPTH & WEIGHT			DEPTH & WEIGHT			P	NP	Io IN.^4	YTOP	YBOT.	DEPTH	THICK.	WIDTH	THICK.	WIDTH	THICK.		
3		W.F			W.F						0.0.0	0.0.0.0					1	

1 = CONSTANT THICKNESS (T)
WIDTH (W)

COMPOSITE SLAB				SHEAR CONN.		N	BOTTOM COVER PLATE				TOP COVER PLATE			
EFFECTIVE WIDTH	THICK.	COPING		ΣZr	SU	ES/EC	X-BEG.	THICK.	WIDTH	LENGTH	X-BEG.	THICK.	WIDTH	LENGTH
4									0.0.0					

P = 1 DESIGN WITH ℓ's
N.P. = 1 DESIGN WITHOUT ℓ's

CONCRETE BEAM DATA (T, RECT., FLAT SLAB)

"N"		NO.	BEAM (WEB) IN.				'T' SLAB		COMPRESSION ST.				ROW ONE				ROW TWO			
TEN.	COM.	ROWS	WIDTH	ΔW	DEPTH	ΔD	WIDTH	THICK.	NO.	SIZE	Δ	DIST.	NO.	SIZE	Δ	DIST.	NO.	SIZE	Δ	DIST.
3																				

ROW THREE				ROW FOUR				ROW FIVE				ROW SIX				ROW SEVEN				ROW EIGHT				ROW NINE			
NO.	SIZE	Δ	DIST.	NO.	SIZE	Δ	DIST.	NO.	SIZE	Δ	DIST.	NO.	SIZE	Δ	DIST.	NO.	SIZE	Δ	DIST.	NO.	SIZE	Δ	DIST.	NO.	SIZE	Δ	DIST.
4																											

LENGTH – FT.
WDLNC – K/FT.
WDLC – K/FT.
WT. BM. – K/FT.

COPING – IN.
AL. STRESS – K.S.I.
WT. BM. MAT'L. – PCF
WSWK – K/FT.
Xn – FT.

DIMENSIONS
Pn – KIPS.
TYPE STEEL – 572, 588
DEPTH – IN.
THICK. – IN.

WEIGHT – LBS.
YTOP – IN.
ΣZr – K/ROW
X-BEG. – FT.
WIDTH – IN.

YBOT. – IN.
SU – K/EA.
SIZE – BAR SIZE (#4, #10, etc.)
Δ – INCREMENT (NO. OF BARS)
DIST. – IN.

SIMPLE SPAN INPUT DATA PROBLEM NUMBER PG-1

03/15/71 USE L/25 TO DETERMINE DEPTH OF WEB DESIGN PLATE GIRDER CONT

KEEPING THE PLATE WIDTH CONSTANT (VARY THE THICKNESS)

SPAN DATA

BEAM	D/A	L.L.C.	T L M	LENGTH	D.F.M.	D.F.V.	D.F.D.	NPL
PG	0	H 20	0 0 1	104.000	1.273	1.429	1.273	3

WDLNC	WDLC	SWLL	E	W BM	FS	FC	WG	TYPE STEEL
0.644	0.265	0.0	29.00	0.0	27.00	0.0	0.490	572

CONCENTRATED LOADS

X1	P1	X2	P2	X3	P3	X4	P4
25.000	2.100	52.000	2.100	78.000	2.100	0.0	0.0

BEAM DATA

ROLLED		SECTION PROPERTIES			PLATE GIRDER WEB		TOP FLANGE		BOTTOM FLANGE	
BEAM	P NP	I	Y TOP	Y BOT	D	T	W	T	W	T
OWF	0 0 0	0.0	0.0	0.0	0.0	0.0	0.0	0.0	0.0	0.0
OWF	0									

BOTTOM COVER PLATE				TOP COVER PLATE				CONSTANT	
X-BEGIN	THICKNESS	WIDTH	LENGTH	X-BEGIN	THICKNESS	WIDTH	LENGTH	W	T
0.0	0.0	0.0	0.0	0.0	0.0	0.0	0.0	1	0

SIMPLE SPAN OUTPUT DATA PROBLEM NUMBER PG-1

PLATE GIRDER PROPERTIES

WEB		TOP FLANGE		BOTTOM FLANGE		WEB AND FLANGES PROPERTIES			
DEPTH	THICK	WIDTH	THICK	WIDTH	THICK	AREA	Y-TOP	Y-BOTTOM	I
60.00	0.4375	12.00	0.7500	12.00	0.7500	44.250	30.750	30.750	24483.4

WEB AND COVER PLATES

BOTTOM COVER PLATE				TOP COVER PLATE			
X-BEGIN	THICKNESS	WIDTH	LENGTH	X-BEGIN	THICKNESS	WIDTH	LENGTH
12.74	1.5000	12.00	78.52	12.74	1.5000	12.00	78.52

WEB WITH COVER PLATES PROPERTIES

AREA	Y-TOP	Y-BOTTOM	I
62.250	31.500	31.500	41922.0

NUMBER OF LONGITUDINAL STIFFENERS NEEDED 0

MAXIMUM TRANSVERSE STIFFENER SPACING (INCHES) AT SPAN 1/20 POINTS

0	1	2	3	4	5	6	7	8	9	10
37.	60.	60.	60.	0.	0.	0.	0.	0.	0.	0.

SIMPLE SPAN OUTPUT DATA PROBLEM NUMBER PG-1

MOMENTS (K-FT.) AT SPAN 1/20 POINTS

SP	GIRDER	P-LOAD	NON-C.	TOT.NC	COMP.	SIDEWK	LIVE LOAD	RR-I
1	51.2	16.5	165.4	233.1	68.1	0.0	196.4 L	0.0
2	98.3	33.0	313.4	444.7	129.0	0.0	372.2 L	0.0
3	141.1	49.5	444.1	634.6	182.7	0.0	527.3 L	0.0
4	178.3	65.9	557.2	801.5	229.3	0.0	661.7 L	0.0
5	209.8	80.3	653.0	943.2	268.7	0.0	775.4 L	0.0
6	235.6	85.9	731.4	1052.9	301.0	0.0	868.5 L	0.0
7	255.6	91.5	792.3	1139.4	326.0	0.0	940.9 L	0.0
8	270.0	97.0	835.9	1202.8	343.9	0.0	992.6 L	0.0
9	278.5	102.6	862.0	1243.1	354.7	0.0	1023.6 L	0.0
10	281.4	108.1	870.7	1260.3	358.3	0.0	1033.9 L	0.0

STRESS (PSI) AT SPAN 1/20 POINTS

	MINIMUM STRESS		MAXIMUM STRESS			ALLOWABLE	R FACTOR	
SP	TOP-S	BOT-S	TOP-C	TOP-S	BOT-S	FS	TOP-S	BOT-S
1	4539	-4539	0	7499	-7499	27000	0.605	0.605
2	8646	-8646	0	14256	-14256	27000	0.607	0.607
3	7369	-7369	0	12124	-12124	27000	0.608	0.608
4	9294	-9294	0	15260	-15260	27000	0.609	0.609
5	10927	-10927	0	17919	-17919	27000	0.610	0.610
6	12206	-12206	0	20037	-20037	27000	0.609	0.609
7	13213	-13213	0	21697	-21697	27000	0.609	0.609
8	13946	-13946	0	22896	-22896	27000	0.609	0.609
9	14407	-14407	0	23636	-23636	27000	0.610	0.610
10	14593	-14593	0	23916	-23916	27000	0.610	0.610

SHEARS (KIPS) AT SPAN 1/20 POINTS PG-1

SP	GIRDER	P-LOAD	NON-C.	TOT.NC	COMP.	SIDEWK	LIVE LOAD	RR-I
0	10.2	3.2	33.5	46.9	13.8	0.0	48.4 L	0.0
1	9.5	3.2	30.1	42.8	12.4	0.0	42.6 L	0.0
2	8.7	3.2	26.8	38.6	11.0	0.0	39.4 L	0.0
3	7.7	3.2	23.4	34.3	9.6	0.0	36.3 L	0.0
4	6.6	3.2	20.1	29.9	8.3	0.0	33.2 L	0.0
5	5.5	1.1	16.7	23.3	6.9	0.0	30.3 L	0.0
6	4.4	1.1	13.4	18.9	5.5	0.0	27.5 L	0.0
7	3.3	1.1	10.0	14.4	4.1	0.0	24.8 L	0.0
8	2.2	1.1	6.7	10.0	2.8	0.0	22.2 L	0.0
9	1.1	1.1	3.3	5.5	1.4	0.0	19.8 L	0.0
10	0.0	1.1	0.0	1.1	0.0	0.0	17.4 L	0.0

	DEAD LOAD DEFLECTIONS (INCHES)					SHEAR	
SP	GIRDER	P-LOAD	NON-C.	TOT.NC	COMP.	RANGE(KIPS)	CON.SPAC(IN)
0	0.0	0.0	0.0	0.0	0.0	48.4	0.0
1	0.074	0.027	0.232	0.333	0.095	43.9	0.0
2	0.145	0.053	0.452	0.650	0.186	42.0	0.0
3	0.211	0.077	0.656	0.944	0.270	40.3	0.0
4	0.271	0.099	0.843	1.213	0.347	39.0	0.0
5	0.324	0.118	1.008	1.451	0.415	37.7	0.0
6	0.370	0.135	1.148	1.653	0.473	36.6	0.0
7	0.406	0.148	1.261	1.815	0.519	35.7	0.0
8	0.432	0.158	1.342	1.933	0.552	35.3	0.0
9	0.448	0.164	1.392	2.005	0.573	34.9	0.0
10	0.454	0.166	1.409	2.029	0.580	34.8	0.0

LIVE LOAD DEFLECTIONS (INCHES)

TRUCK	LANE	MILITARY	RAILROAD	SIDEWALK	L/ 800
1.021	1.554	0.0	0.0	0.0	1.560

SIMPLE SPAN

IDENTIFICATION

"CONT" TO CONTINUE REMARKS

PROG.	PROB. NO.	PROJECT NO.	COUNTY	DATE	DESIGNER	ETC.	
* B04	PG-2	USE GIVEN DEPTH WEB, DESIGN WEB THICKNESS AND PLATES					CONT
* KEEPING THE FLANGE AND PLATE WITH THE SAME THICKNESS (VARY WIDTH)							

SPAN DATA

CODE 1	TYPE	D/A	LIVE LOAD 5 CLASS	T	L	M	SPAN LENGTH 12	DFM 18	DFV 22	DFD 26	NPL 30	W_{DLNC} 32	W_{DLC} 36	W_{SWK} 40	E BEAM X 10^6 44	WT.BM. 48	ALLOW. STRESS 52 STEEL	56 CONC.	WT.BM. MAT'L. 60	TYPE STEEL 63	66
1	PG	0	HS20				144.00	1.273	1.429	1.00	5	.644	.265		29.00				490	36	

1 = ANALYSIS (D/A) 1 = SKIP (T, L, M)
BLANK = DESIGN (D/A)

CONCENTRATED LOADS (LIMIT 40)

		3 X1	9 P1	15 X2	21 P2	27 X3	33 P3	39 X4	45 P4	51
2	1	24.000	2.100	48.000	2.100	7.200	2.100	9.600	2.100	
2	2	1.200	2.100							
2	3									
2	4									

CODE: TYPE
RB – ROLLED BEAM
RP – ROLLED W/PLATE
CB – COMPOSITE ROLLED
PG – PLATE GIRDER
CG – COMPOSITE GIRDER
TB – CONCRETE BEAM

STEEL BEAM DATA

ROLLED BEAM								NON-STANDARD BEAM			PLATE GIRDER									
BEAM 1			BEAM 2			P	NP	SECTION PROPERTIES			WEB		TOP FLANGE		BOTTOM FLANGE		CONW	CONT	66
1 DEPTH & WEIGHT			9 DEPTH & WEIGHT					18 I_o IN.^{4}	26 YTOP	31 YBOT.	36 DEPTH	41 THICK.	46 WIDTH	50 THICK.	55 WIDTH	59 THICK.				
3		W.F			W.F						80.00	.0000						1		

1 = CONSTANT THICKNESS (T) WIDTH (W)

COMPOSITE SLAB				SHEAR CONN.		N	BOTTOM COVER PLATE				TOP COVER PLATE				65
1 2 EFFECTIVE WIDTH	8 THICK.	13 COPING		17 ΣZ_r	21 SU	ES/EC 25	27 X-BEG.	31 THICK.	36 WIDTH	40 LENGTH	46 X-BEG.	50 THICK.	55 WIDTH	59 LENGTH	
4	0.000														

P = 1 DESIGN WITH ℄'s
N.P. = 1 DESIGN WITHOUT ℄'s

CONCRETE BEAM DATA (T, RECT., FLAT SLAB)

"N"		NO.	BEAM (WEB) IN.				'T' SLAB		COMPRESSION ST.				ROW ONE				ROW TWO				
1 TEN.	COM.	ROWS	8 WIDTH	13 ΔW	DEPTH	ΔD	26 WIDTH	THICK.	36 NO.	SIZE	Δ	DIST.	45 NO.	SIZE	Δ	DIST.	54 NO.	SIZE	Δ	DIST.	63
3																					

ROW THREE				ROW FOUR				ROW FIVE				ROW SIX				ROW SEVEN				ROW EIGHT				ROW NINE				
1 NO.	SIZE	Δ	DIST.	11 NO.	SIZE	Δ	DIST.	20 NO.	SIZE	Δ	DIST.	29 NO.	SIZE	Δ	DIST.	38 NO.	SIZE	Δ	DIST.	47 NO.	SIZE	Δ	DIST.	56 NO.	SIZE	Δ	DIST.	65
4																												

DIMENSIONS

LENGTH – FT.
W_{DLNC} – K/FT.
W_{DLC} – K/FT.
WT. BM. – K/FT.
COPING – IN.
AL. STRESS – K.S.I.
WT. BM. MAT'L. – PCF
W_{SWK} – K/FT.
X_n – FT.
P_n – KIPS
TYPE STEEL – 572, 588
DEPTH – IN.
THICK. – IN.
WEIGHT – LBS.
YTOP – IN.
ΣZ_r – K/ROW
X-BEG. – FT.
WIDTH – IN.
YBOT. – IN.
SU – K/EA.
SIZE – BAR SIZE (#4, #10, etc.)
Δ – INCREMENT (NO. OF BARS)
DIST. – IN.

SIMPLE SPAN INPUT DATA PROBLEM NUMBER PG-2

03/15/71 USE GIVEN DEPTH WEB,DESIGN WEB THICKNESS AND PLATES CONT

KEEPING THE FLANGE AND PLATE WITH THE SAME THICKNESS (VARY WIDTH)

SPAN DATA

BEAM	D/A	L.L.C.	T L M	LENGTH	D.F.M.	D.F.V.	D.F.D.	NPL
PG	0	HS20	0 0 0	144.000	1.273	1.429	1.000	5

WDLNC	WDLC	SWLL	E	W BM	FS	FC	WG	TYPE STEEL
0.644	0.265	0.0	29.00	0.0	0.0	0.0	0.490	36

CONCENTRATED LOADS

X1	P1	X2	P2	X3	P3	X4	P4
24.000	2.100	48.000	2.100	72.000	2.100	96.000	2.100
120.000	2.100	0.0	0.0	0.0	0.0	0.0	0.0

BEAM DATA

ROLLED			SECTION PROPERTIES			PLATE GIRDER WEB		TOP FLANGE		BOTTOM FLANGE	
BEAM	P	NP	I	Y TOP	Y BOT	D	T	W	T	W	T
OWF	0 0	0	0.0	0.0	0.0	80.00	0.0	0.0	0.0	0.0	0.0
OWF	0										

BOTTOM COVER PLATE				TOP COVER PLATE				CONSTANT	
X-BEGIN	THICKNESS	WIDTH	LENGTH	X-BEGIN	THICKNESS	WIDTH	LENGTH	W	T
0.0	0.0	0.0	0.0	0.0	0.0	0.0	0.0	0	1

SIMPLE SPAN CUTPUT DATA PROBLEM NUMBER PG-2

PLATE GIRDER PROPERTIES

WEB		TOP FLANGE		BOTTOM FLANGE		WEB AND FLANGES PROPERTIES			
DEPTH	THICK	WIDTH	THICK	WIDTH	THICK	AREA	Y-TOP	Y-BOTTOM	I
80.00	0.5000	7.00	2.8125	7.00	2.8125	79.375	42.813	42.813	88866.8

WEB AND COVER PLATES

BOTTOM COVER PLATE				TOP COVER PLATE			
X-BEGIN	THICKNESS	WIDTH	LENGTH	X-BEGIN	THICKNESS	WIDTH	LENGTH
23.27	2.8125	12.CC	97.47	23.27	2.8125	12.00	97.47

WEB WITH COVER PLATES PROPERTIES

AREA	Y-TOP	Y-BOTTOM	I
1C7.500	42.813	42.813	137105.0

NUMBER OF LONGITUDINAL STIFFENERS NEEDED 0

MAXIMUM TRANSVERSE STIFFENER SPACING (INCHES) AT SPAN 1/20 POINTS

0	1	2	3	4	5	6	7	8	9	10
45.	80.	80.	80.	80.	80.	80.	80.	80.	80.	80.

SIMPLE SPAN OUTPUT DATA PROBLEM NUMBER PG-2

MOMENTS (K-FT.) AT SPAN 1/20 POINTS

SP	GIRDER	P-LOAD	NON-C.	TOT.NC	COMP.	SIDEWK	LIVE LOAD	RR-I
1	166.6	37.8	317.2	521.6	130.5	0.0	346.4 T	0.0
2	319.2	75.6	600.9	995.7	247.3	0.0	653.6 T	0.0
3	457.8	113.4	851.3	1422.5	350.3	0.0	921.7 T	0.0
4	580.9	141.1	1068.3	1790.3	439.6	0.0	1150.7 T	0.0
5	685.2	163.8	1251.9	2100.9	515.2	0.0	1340.5 T	0.0
6	770.5	186.5	1402.2	2359.2	577.0	0.0	1491.3 T	0.0
7	836.9	204.1	1519.0	2560.0	625.1	0.0	1607.1 T	0.0
8	884.3	211.7	1602.5	2698.5	659.4	0.0	1692.2 T	0.0
9	912.8	219.2	1652.6	2784.6	680.0	0.0	1738.2 T	0.0
10	922.2	226.8	1669.2	2818.3	686.9	0.0	1745.1 T	0.0

STRESS (PSI) AT SPAN 1/20 POINTS

	MINIMUM STRESS			MAXIMUM STRESS		ALLOWABLE	R FACTOR	
SP	TOP-S	BOT-S	TOP-C	TOP-S	BOT-S	FS	TOP-S	BOT-S
1	3769	-3769	0	5772	-5772	20000	0.653	0.653
2	7185	-7185	0	10964	-10964	20000	0.655	0.655
3	10248	-10248	0	15577	-15577	20000	0.658	0.658
4	8355	-8355	0	12667	-12667	20000	0.660	0.660
5	9802	-9802	0	14826	-14826	20000	0.661	0.661
6	11002	-11002	0	16590	-16590	20000	0.663	0.663
7	11934	-11934	0	17956	-17956	20000	0.665	0.665
8	12582	-12582	0	18923	-18923	20000	0.665	0.665
9	12982	-12982	0	19495	-19495	20000	0.666	0.666
10	13134	-13134	0	19673	-19673	20000	0.668	0.668

SHEARS (KIPS) AT SPAN 1/20 POINTS PG-2

SP	GIRDER	P-LOAD	NON-C.	TOT.NC	COMP.	SIDEWK	LIVE LOAD	RR-I
0	24.1	5.2	46.4	75.7	19.1	0.0	56.8 L	0.0
1	22.2	5.2	41.7	69.1	17.2	0.0	50.2 L	0.0
2	20.2	5.2	37.1	62.6	15.3	0.0	46.2 L	0.0
3	18.3	5.2	32.5	56.0	13.4	0.0	43.3 T	0.0
4	15.8	3.1	27.8	46.8	11.4	0.0	40.7 T	0.0
5	13.2	3.1	23.2	39.5	9.5	0.0	38.1 T	0.0
6	10.5	3.1	18.5	32.2	7.6	0.0	35.6 T	0.0
7	7.9	1.0	13.9	22.9	5.7	0.0	33.0 T	0.0
8	5.3	1.0	9.3	15.6	3.8	0.0	30.3 T	0.0
9	2.6	1.0	4.6	8.3	1.9	0.0	27.7 T	0.0
10	0.0	1.0	0.0	1.1	0.0	0.0	25.0 T	0.0

	DEAD LOAD DEFLECTIONS (INCHES)					SHEAR	
SP	GIRDER	P-LOAD	NON-C.	TOT.NC	COMP.	RANGE(KIPS)	CON.SPAC(IN)
0	0.0	0.0	0.0	0.0	0.0	56.8	0.0
1	0.146	0.035	0.267	0.448	0.110	51.7	0.0
2	0.286	0.069	0.523	0.879	0.215	49.7	0.0
3	0.415	0.100	0.759	1.274	0.312	48.7	0.0
4	0.531	0.128	0.968	1.627	0.399	48.8	0.0
5	0.633	0.153	1.154	1.940	0.475	49.2	0.0
6	0.720	0.174	1.312	2.206	0.540	49.5	0.0
7	0.790	0.191	1.438	2.418	0.592	49.7	0.0
8	0.840	0.203	1.530	2.573	0.630	49.9	0.0
9	0.871	0.210	1.586	2.668	0.653	50.0	0.0
10	0.882	0.213	1.605	2.699	0.660	50.0	0.0

LIVE LOAD DEFLECTIONS (INCHES)

TRUCK	LANE	MILITARY	RAILROAD	SIDEWALK	L/ 800
1.145	1.239	0.780	0.0	0.0	2.160

SIMPLE SPAN

IDENTIFICATION

"CONT" TO CONTINUE REMARKS

PROG.	PROB. NO.	PROJECT NO.	COUNTY	DATE	DESIGNER	ETC.	
* B.O.4	PG-3	USE GIVEN PLATES AND WEB AS BASIS FOR DESIGN KEERING					CONT
* FLANGE AND PLATE DIMENSIONS CONSTANT THROUGHOUT LENGTH							

SPAN DATA

CODE TYPE	D/A	LIVE LOAD CLASS	T	L	M	SPAN LENGTH	DFM	DFV	DFD	NPL	WDLNC	WDLC	WSWK	EBEAM X 10^6	WT.BM.	ALLOW. STRESS STEEL	ALLOW. STRESS CONC.	WT.BM. MAT'L.	TYPE STEEL
PG	0	HS15				120.000	1.273	1.429	08.00	5	.777	.105	.283	29.00					588

1 = ANALYSIS (D/A) 1 = SKIP (T, L, M)
BLANK = DESIGN (D/A)

CONCENTRATED LOADS (LIMIT 40)

	X1	P1	X2	P2	X3	P3	X4	P4
2 1	20.0	21.00	40.0	21.00	60.0	21.00	80.0	21.00
2 2	10.0	21.00						
2 3								
2 4								

CODE: TYPE
RB – ROLLED BEAM
RP – ROLLED W/PLATE
CB – COMPOSITE ROLLED
PG – PLATE GIRDER
CG – COMPOSITE GIRDER
TB – CONCRETE BEAM

STEEL BEAM DATA

ROLLED BEAM: BEAM 1 DEPTH & WEIGHT	BEAM 2 DEPTH & WEIGHT	P	NP	NON-STANDARD BEAM: SECTION PROPERTIES I_o IN.^4	YTOP	YBOT.	PLATE GIRDER: WEB DEPTH	WEB THICK.	TOP FLANGE WIDTH	TOP FLANGE THICK.	BOTTOM FLANGE WIDTH	BOTTOM FLANGE THICK.	CONT. W	CONT. T
3 W,F	W,F						60.	.375					1	1

1 = CONSTANT THICKNESS (T) WIDTH (W)

COMPOSITE SLAB: EFFECTIVE WIDTH	THICK.	COPING	SHEAR CONN. ΣZr	SU	N ES/EC	BOTTOM COVER PLATE: X-BEG.	THICK.	WIDTH	LENGTH	TOP COVER PLATE: X-BEG.	THICK.	WIDTH	LENGTH
4							1.0	120.0			1.0	120.0	

P = 1 DESIGN WITH PL's
N.P. = 1 DESIGN WITHOUT PL's

CONCRETE BEAM DATA (T, RECT., FLAT SLAB)

"N" TEN.	"N" COM.	NO. ROWS	BEAM (WEB) IN. WIDTH	ΔW	DEPTH	ΔD	'T' SLAB WIDTH	THICK.	COMPRESSION ST. NO.	SIZE	Δ	DIST.	ROW ONE NO.	SIZE	Δ	DIST.	ROW TWO NO.	SIZE	Δ	DIST.
3																				

ROW THREE NO.	SIZE	Δ	DIST.	ROW FOUR NO.	SIZE	Δ	DIST.	ROW FIVE NO.	SIZE	Δ	DIST.	ROW SIX NO.	SIZE	Δ	DIST.	ROW SEVEN NO.	SIZE	Δ	DIST.	ROW EIGHT NO.	SIZE	Δ	DIST.	ROW NINE NO.	SIZE	Δ	DIST.
4																											

DIMENSIONS

LENGTH – FT.
WDLNC – K/FT.
WDLC – K/FT.
WT. BM. – K/FT.
COPING – IN.
AL. STRESS – K.S.I.
WT. BM. MAT'L. – PCF
WSWK – K/FT.
X_n – FT.
P_n – KIPS.
TYPE STEEL – 572, 588
DEPTH – IN.
THICK. – IN.
WEIGHT – LBS.
YTOP – IN.
ΣZr – K/ROW
X-BEG. – FT.
WIDTH – IN.
YBOT. – IN.
SU – K/EA.
SIZE – BAR SIZE (#4, #10, etc.)
Δ – INCREMENT (NO. OF BARS)
DIST. – IN.

SIMPLE SPAN INPUT DATA PROBLEM NUMBER PG-3

03/15/71 USE GIVEN PLATES AND WEB AS BASIS FOR DESIGN KEEPING CONT

FLANGE AND PLATE DIMENSIONS CONSTANT THROUGHOUT LENGTH

SPAN DATA

BEAM	D/A	L.L.C.	T L M	LENGTH	D.F.M.	D.F.V.	D.F.D.	NPL
PG	0	HS15	0 0 0	120.000	1.273	1.429	0.800	5

WDLNC	WDLC	SWLL	E	W BM	FS	FC	WG	TYPE STEEL
0.777	0.105	0.283	29.0C	0.0	0.0	0.0	0.0	588

CONCENTRATED LOADS

X1	P1	X2	P2	X3	P3	X4	P4
20.000	2.100	4C.000	2.100	60.000	2.100	80.000	2.100
100.000	2.100	0.0	0.0	0.0	0.0	0.0	0.0

BEAM DATA

ROLLED		SECTION PROPERTIES			PLATE GIRDER WEB		TOP FLANGE		BOTTOM FLANGE	
BEAM	P NP	I	Y TCP	Y BOT	D	T	W	T	W	T
OWF	0 0 0	0.0	0.0	0.0	60.00	0.3750	0.0	0.0	0.0	0.0
OWF	0									

BOTTOM COVER PLATE				TOP COVER PLATE				CONSTANT	
X-BEGIN	THICKNESS	WIDTH	LENGTH	X-BEGIN	THICKNESS	WIDTH	LENGTH	W	T
0.0	1.0000	12.00	0.0	0.0	1.0000	12.00	0.0	1	1

SIMPLE SPAN OUTPUT DATA PROBLEM NUMBER PG-3

PLATE GIRDER PROPERTIES

WEB		TOP FLANGE		BOTTOM FLANGE		WEB AND FLANGES PROPERTIES			
DEPTH	THICK	WIDTH	THICK	WIDTH	THICK	AREA	Y-TOP	Y-BOTTOM	I
60.00	0.3750	12.00	2.6875	12.00	2.6875	87.000	32.688	32.688	70155.6

WEB AND COVER PLATES

BOTTOM COVER PLATE				TOP COVER PLATE			
X-BEGIN	THICKNESS	WIDTH	LENGTH	X-BEGIN	THICKNESS	WIDTH	LENGTH
0.0	2.6875	12.00	120.00	0.0	2.6875	12.00	120.00

WEB WITH COVER PLATES PROPERTIES

AREA	Y-TOP	Y-BOTTOM	I
87.000	32.688	32.688	70155.6

NUMBER OF LONGITUDINAL STIFFENERS NEEDED 1

MAXIMUM TRANSVERSE STIFFENER SPACING (INCHES) AT SPAN 1/20 POINTS

0	1	2	3	4	5	6	7	8	9	10
27.	56.	59.	60.	60.	60.	60.	60.	60.	60.	60.

SIMPLE SPAN OUTPUT DATA PROBLEM NUMBER PG-3

MOMENTS (K-FT.) AT SPAN 1/20 POINTS

SP	GIRDER	P-LOAD	NON-C.	TOT.NC	COMP.	SIDEWK	LIVE LOAD	RR-I
1	101.2	31.5	265.7	398.5	35.9	96.8	216.6 T	0.0
2	191.8	63.0	503.5	758.3	68.0	183.4	408.3 T	0.0
3	271.8	94.5	713.3	1079.6	96.4	259.8	575.3 T	0.0
4	341.0	117.6	895.1	1353.7	121.0	326.0	717.3 T	0.0
5	399.7	136.5	1048.9	1585.1	141.7	382.0	834.6 T	0.0
6	447.6	155.4	1174.8	1777.8	158.8	427.9	927.0 T	0.0
7	484.9	170.1	1272.7	1927.7	172.0	463.6	997.8 T	0.0
8	511.6	176.4	1342.7	2030.6	181.4	489.0	1050.3 T	0.0
9	527.5	182.7	1384.6	2094.9	187.1	504.3	1077.9 T	0.0
10	532.9	189.0	1398.6	2120.5	189.0	509.4	1080.6 T	0.0

STRESS (PSI) AT SPAN 1/20 POINTS

	MINIMUM STRESS		MAXIMUM STRESS			ALLOWABLE	R FACTOR	
SP	TOP-S	BOT-S	TOP-C	TOP-S	BOT-S	FS	TOP-S	BOT-S
1	2428	-2428	0	4180	-4180	27000	0.581	0.581
2	4620	-4620	0	7928	-7928	27000	0.583	0.583
3	6574	-6574	0	11243	-11243	27000	0.585	0.585
4	8245	-8245	0	14078	-14078	27000	0.586	0.586
5	9655	-9655	0	16457	-16457	27000	0.587	0.587
6	10827	-10827	0	18403	-18403	27000	0.588	0.588
7	11739	-11739	0	19910	-19910	27000	0.590	0.590
8	12367	-12367	0	20974	-20974	27000	0.590	0.590
9	12758	-12758	0	21604	-21604	27000	0.591	0.591
10	12912	-12912	0	21802	-21802	27000	0.592	0.592

SHEARS (KIPS) AT SPAN 1/20 POINTS PG-3

SP	GIRDER	P-LOAD	NON-C.	TOT.NC	COMP.	SIDEWK	LIVE LOAD	RR-I
0	17.8	5.2	46.6	69.6	6.3	17.0	40.4 T	0.0
1	16.0	5.2	42.0	63.2	5.7	15.3	36.3 T	0.0
2	14.2	5.2	37.3	56.8	5.0	13.8	34.3 T	0.0
3	12.4	5.2	32.6	50.3	4.4	12.3	32.4 T	0.0
4	10.7	3.1	28.0	41.8	3.8	10.9	30.4 T	0.0
5	8.9	3.1	23.3	35.3	3.1	9.6	28.5 T	0.0
6	7.1	3.1	18.6	28.9	2.5	8.3	26.5 T	0.0
7	5.3	1.0	14.0	20.4	1.9	7.2	24.5 T	0.0
8	3.6	1.0	9.3	13.9	1.3	6.1	22.5 T	0.0
9	1.8	1.0	4.7	7.5	0.6	5.1	20.6 M	0.0
10	0.0	1.0	-0.0	1.0	-0.0	4.2	18.8 M	0.0

	DEAD LOAD DEFLECTIONS (INCHES)					SHEAR	
SP	GIRDER	P-LOAD	NON-C.	TOT.NC	COMP.	RANGE(KIPS)	CON.SPAC(IN)
0	0.0	0.0	0.0	0.0	0.0	57.4	0.0
1	0.108	0.037	0.284	0.429	0.038	52.9	0.0
2	0.213	0.074	0.559	0.846	0.076	51.6	0.0
3	0.312	0.108	0.820	1.240	0.111	50.3	0.0
4	0.403	0.140	1.058	1.601	0.143	49.3	0.0
5	0.484	0.168	1.270	1.921	0.172	48.4	0.0
6	0.552	0.191	1.449	2.192	0.196	47.6	0.0
7	0.607	0.210	1.592	2.409	0.215	47.0	0.0
8	0.647	0.224	1.697	2.568	0.229	46.4	0.0
9	0.671	0.233	1.760	2.664	0.238	46.1	0.0
10	0.679	0.235	1.782	2.696	0.241	46.0	0.0

LIVE LOAD DEFLECTIONS (INCHES)

TRUCK	LANE	MILITARY	RAILROAD	SIDEWALK	L/1000
0.767	0.729	0.703	0.0	0.649	1.440

SIMPLE SPAN

10-15-70

STATE HIGHWAY DEPARTMENT OF GEORGIA
BRIDGE DIVISION

IDENTIFICATION

"CONT" TO CONTINUE REMARKS

	PROG.	PROB. NO.	PROJECT NO.	COUNTY	DATE	DESIGNER	ETC.
*	B,0,4	PG-4	ANALYZE A GIVEN PLATE GIRDER				
*							

SPAN DATA

	CODE TYPE	CODE D/A	LIVE LOAD CLASS	T	L	M	SPAN LENGTH	DFM	DFV	DFD	NPL	WDLNC	WDLC	WSWK	EBEAM X 10^6	WT.BM.	ALLOW. STRESS STEEL	ALLOW. STRESS CONC.	WT.BM. MAT'L.	TYPE STEEL
1	PG	1	RR72				68.00	1.000	0.477	1.000	4	.777	.105	.	29.00	.	20.00	.	490	

1 = ANALYSIS (D/A) 1 = SKIP (T, L, M)
BLANK = DESIGN (D/A)

CONCENTRATED LOADS (LIMIT 40)

		X1	P1	X2	P2	X3	P3	X4	P4
2	1	0.0	1.680	23.000	00.500	45.000	0.500	68.000	1.680
2	2								
2	3								
2	4								

CODE: TYPE
RB – ROLLED BEAM
RP – ROLLED W/PLATE
CB – COMPOSITE ROLLED
PG – PLATE GIRDER
CG – COMPOSITE GIRDER
TB – CONCRETE BEAM

STEEL BEAM DATA

	ROLLED BEAM BEAM 1 DEPTH & WEIGHT		ROLLED BEAM BEAM 2 DEPTH & WEIGHT		P	NP	NON-STANDARD BEAM SECTION PROPERTIES I_o IN.^4	YTOP	YBOT.	PLATE GIRDER WEB DEPTH	WEB THICK.	TOP FLANGE WIDTH	TOP FLANGE THICK.	BOTTOM FLANGE WIDTH	BOTTOM FLANGE THICK.	CONW	CONT
3		W,F		W,F						72.00	1.0	18.00	1.500	18.00	1.500		

1 = CONSTANT THICKNESS (T)
WIDTH (W)

	COMPOSITE SLAB EFFECTIVE WIDTH	THICK.	COPING	SHEAR CONN. ΣZ_r	SU	N ES/EC	BOTTOM COVER PLATE X-BEG.	THICK.	WIDTH	LENGTH	TOP COVER PLATE X-BEG.	THICK.	WIDTH	LENGTH
4							0.00	1.500	18.00	68.000	.000	1.500	18.00	68.000

P = 1 DESIGN WITH ℄'s
N.P. = 1 DESIGN WITHOUT ℄'s

CONCRETE BEAM DATA (T, RECT., FLAT SLAB)

"N" TEN.	"N" COM.	NO. ROWS	BEAM (WEB) IN. WIDTH	ΔW	DEPTH	ΔD	'T' SLAB WIDTH	THICK.	COMPRESSION ST. NO.	SIZE	Δ	DIST.	ROW ONE NO.	SIZE	Δ	DIST.	ROW TWO NO.	SIZE	Δ	DIST.
3																				

ROW THREE NO.	SIZE	Δ	DIST.	ROW FOUR NO.	SIZE	Δ	DIST.	ROW FIVE NO.	SIZE	Δ	DIST.	ROW SIX NO.	SIZE	Δ	DIST.	ROW SEVEN NO.	SIZE	Δ	DIST.	ROW EIGHT NO.	SIZE	Δ	DIST.	ROW NINE NO.	SIZE	Δ	DIST.
4																											

DIMENSIONS

LENGTH – FT.
WDLNC – K/FT.
WDLC – K/FT.
WT. BM. – K/FT.
COPING – IN.
AL. STRESS – K.S.I.
WT. BM. MAT'L. – PCF
WSWK – K/FT.
X_n – FT.
P_n – KIPS.
TYPE STEEL – 572, 588
DEPTH – IN.
THICK. – IN.
WEIGHT – LBS.
YTOP – IN.
ΣZ_r – K/ROW
X-BEG. – FT.
WIDTH – IN.
YBOT. – IN.
SU – K/EA.
SIZE – BAR SIZE (#4, #10, etc.)
Δ – INCREMENT (NO. OF BARS)
DIST. – IN.

SIMPLE SPAN INPUT DATA PROBLEM NUMBER PG-4

03/15/71 ANALYZE A GIVEN PLATE GIRDER

SPAN DATA

BEAM	D/A	L.L.C.	T L M	LENGTH	D.F.M.	D.F.V.	D.F.D.	NPL
PG	1	RR72	C 0 0	68.000	1.000	0.477	1.000	4

WDLNC	WDLC	SWLL	E	W BM	FS	FC	WG	TYPE STEEL
0.777	0.105	C.C	29.00	0.0	20.00	0.0	0.490	0

CONCENTRATED LOADS

X1	P1	X2	P2	X3	P3	X4	P4
0.0	1.680	23.000	0.500	45.000	0.500	68.000	1.680

BEAM DATA

ROLLED		SECTION PROPERTIES			PLATE GIRDER WEB		TOP FLANGE		BOTTOM FLANGE	
BEAM	P NP	I	Y TOP	Y BOT	D	T	W	T	W	T
OWF	0 0 0	0.0	C.0	0.0	72.00	1.0000	18.00	1.5000	18.00	1.500
OWF	0									

BOTTOM COVER PLATE				TOP COVER PLATE				CONSTANT	
X-BEGIN	THICKNESS	WIDTH	LENGTH	X-BEGIN	THICKNESS	WIDTH	LENGTH	W	T
0.0	1.5000	18.0C	68.00	0.0	1.5000	18.00	68.00	0	0

SIMPLE SPAN CUTPUT DATA PROBLEM NUMBER PG-4

PLATE GIRDER PRCPERTIES

WEB		TOP FLANGE		BOTTOM FLANGE		WEB AND FLANGES PROPERTIES			
DEPTH	THICK	WIDTH	THICK	WIDTH	THICK	AREA	Y-TOP	Y-BOTTOM	I
72.00	1.0000	18.00	1.5000	18.00	1.5000	126.000	37.500	37.500	104044.5

WEB ANC COVER PLATES

BOTTOM COVER PLATE				TOP COVER PLATE			
X-BEGIN	THICKNESS	WIDTH	LENGTH	X-BEGIN	THICKNESS	WIDTH	LENGTH
0.0	1.5000	18.00	68.00	0.0	1.5000	18.00	68.00

WEB WITH COVER PLATES PROPERTIES

AREA	Y-TOP	Y-BOTTOM	I
126.000	37.500	37.500	104044.5

NUMBER OF LONGITUDINAL STIFFENERS NEECED 0

TRANSVERSE STIFFENERS NCT REQUIRED

SIMPLE SPAN OUTPUT DATA PROBLEM NUMBER PG-4

MOMENTS (K-FT.) AT SPAN 1/20 POINTS

SP	GIRDER	P-LOAD	NON-C.	TOT.NC	COMP.	SIDEWK	LIVE LOAD	RR-I
1	47.1	1.7	85.3	134.1	11.5	0.0	600.6 R	286.5
2	89.2	3.4	161.7	254.3	21.8	0.0	1093.8 R	521.8
3	126.4	5.1	229.0	360.5	31.0	0.0	1533.3 R	731.4
4	158.6	6.8	287.4	452.8	38.8	0.0	1910.9 R	911.5
5	185.9	8.5	336.8	531.2	45.5	0.0	2236.0 R	1066.6
6	208.2	10.2	377.2	595.6	51.0	0.0	2471.2 R	1178.8
7	225.5	11.5	408.7	645.7	55.2	0.0	2665.2 R	1271.3
8	237.9	11.5	431.1	680.5	58.3	0.0	2800.5 R	1335.8
9	245.3	11.5	444.6	701.5	60.1	0.0	2882.8 R	1375.1
10	247.8	11.5	449.1	708.4	60.7	0.0	2922.3 R	1393.9

STRESS (PSI) AT SPAN 1/20 POINTS

	MINIMUM STRESS		MAXIMUM STRESS			ALLOWABLE	R FACTOR	
SP	TOP-S	BOT-S	TOP-C	TOP-S	BOT-S	FS	TOP-S	BOT-S
1	629	-629	0	4466	-4466	20000	0.141	0.141
2	1194	-1194	0	8181	-8181	20000	0.146	0.146
3	1693	-1693	0	11488	-11488	20000	0.147	0.147
4	2126	-2126	0	14333	-14333	20000	0.148	0.148
5	2494	-2494	0	16778	-16778	20000	0.149	0.149
6	2796	-2796	0	18582	-18582	20000	0.150	0.150
7	3031	-3031	0	20057	-20057	20000	0.151	0.151
8	3195	-3195	0	21085	-21085	20000	0.152	0.152
9	3293	-3293	0	21709	-21709	20000	0.152	0.152
10	3326	-3326	0	21994	-21994	20000	0.151	0.151

SHEARS (KIPS) AT SPAN 1/20 POINTS

PG-4

SP	GIRDER	P-LOAD	NON-C.	TOT.NC	COMP.	SIDEWK	LIVE LOAD	RR-I
0	14.6	2.2	26.4	43.2	3.6	0.0	194.1 R	92.6
1	13.1	0.5	23.8	37.4	3.2	0.0	176.6 R	84.3
2	11.7	0.5	21.1	33.3	2.9	0.0	160.9 R	76.7
3	10.2	0.5	18.5	29.2	2.5	0.0	145.8 R	69.5
4	8.7	0.5	15.9	25.1	2.1	0.0	131.0 R	62.5
5	7.3	0.5	13.2	21.0	1.8	0.0	116.7 R	55.7
6	5.8	0.5	10.6	16.9	1.4	0.0	103.1 R	49.2
7	4.4	-0.0	7.9	12.3	1.1	0.0	90.3 R	43.1
8	2.9	-0.0	5.3	8.2	0.7	0.0	77.5 R	37.0
9	1.5	-0.0	2.6	4.1	0.4	0.0	65.7 R	31.3
10	0.0	-0.0	0.0	0.0	0.0	0.0	54.4 R	25.9

	DEAD LOAD DEFLECTIONS (INCHES)					SHEAR	
SP	GIRDER	P-LOAD	NON-C.	TOT.NC	COMP.	RANGE(KIPS)	CON.SPAC(IN)
0	0.0	0.0	0.0	0.0	0.0	194.1	0.0
1	0.011	0.001	0.020	0.031	0.003	176.6	0.0
2	0.021	0.001	0.039	0.061	0.005	160.9	0.0
3	0.031	0.001	0.057	0.090	0.008	145.8	0.0
4	0.041	0.002	0.074	0.116	0.010	131.0	0.0
5	0.049	0.002	0.088	0.139	0.012	116.7	0.0
6	0.056	0.003	0.101	0.159	0.014	103.1	0.0
7	0.061	0.003	0.111	0.175	0.015	90.3	0.0
8	0.065	0.003	0.118	0.186	0.016	77.5	0.0
9	0.068	0.003	0.122	0.193	0.017	65.7	0.0
10	0.068	0.003	0.124	0.195	0.017	54.4	0.0

LIVE LOAD DEFLECTIONS (INCHES)

TRUCK	LANE	MILITARY	RAILROAD	SIDEWALK	L/ 640
0.0	0.0	0.0	1.191	0.0	1.275

SIMPLE SPAN

IDENTIFICATION

"CONT" TO CONTINUE REMARKS

	PROG.	PROB. NO.	PROJECT NO.	COUNTY	DATE	DESIGNER	ETC.
*	B.0.4	PG-5	GIVEN LENGTH AND LOADS DESIGN A PEDESTRIAN OVERPASS				
*							

SPAN DATA

	CODE TYPE	D/A	LIVE LOAD CLASS	T	L	M	SPAN LENGTH	DFM	DFV	DFD	NPL	WDLNC	WDLC	WSWK	EBEAM X 10^6	WT.BM.	ALLOW. STRESS STEEL	ALLOW. STRESS CONC.	WT.BM. MAT'L.	TYPE STEEL
1	PG		H.S.0.0			1	134.0.0.0	1.273	1.429	.80.0	5	.389		.298	29.00				4.90	36

1 = ANALYSIS (D/A) 1 = SKIP (T, L, M)
BLANK = DESIGN (D/A)

CONCENTRATED LOADS (LIMIT 40)

		X1	P1	X2	P2	X3	P3	X4	P4
2	1	22.0.0.0	01.0.0.0	45.0.0.0	1.0.0.0	67.0.0.0	1.0.0.0	89.0.0.0	1.0.0.0
2	2	112.0.0.0	1.0.0.0						
2	3								
2	4								

CODE: TYPE
RB – ROLLED BEAM
RP – ROLLED W/PLATE
CB – COMPOSITE ROLLED
PG – PLATE GIRDER
CG – COMPOSITE GIRDER
TB – CONCRETE BEAM

STEEL BEAM DATA

	ROLLED BEAM: BEAM 1 DEPTH & WEIGHT			ROLLED BEAM: BEAM 2 DEPTH & WEIGHT			P	NP	NON-STANDARD BEAM: SECTION PROPERTIES I_o IN.^4	YTOP	YBOT.	PLATE GIRDER: WEB DEPTH	WEB THICK.	TOP FLANGE WIDTH	TOP FLANGE THICK.	BOTTOM FLANGE WIDTH	BOTTOM FLANGE THICK.	CONW	CONT
3		W.F			W.F													0	0

1 = CONSTANT THICKNESS (T) WIDTH (W)

	COMPOSITE SLAB: EFFECTIVE WIDTH	THICK.	COPING	SHEAR CONN. ΣZ_r	SU	N ES/EC	BOTTOM COVER PLATE X-BEG.	THICK.	WIDTH	LENGTH	TOP COVER PLATE X-BEG.	THICK.	WIDTH	LENGTH
4										0.0.0.0				

P = 1 DESIGN WITH PL'S
N.P. = 1 DESIGN WITHOUT PL'S

CONCRETE BEAM DATA (T, RECT., FLAT SLAB)

	"N" TEN.	"N" COM.	NO. ROWS	BEAM (WEB) IN. WIDTH	ΔW	DEPTH	ΔD	'T' SLAB WIDTH	THICK.	COMPRESSION ST. NO.	SIZE	Δ	DIST.	ROW ONE NO.	SIZE	Δ	DIST.	ROW TWO NO.	SIZE	Δ	DIST.
3																					

	ROW THREE NO.	SIZE	Δ	DIST.	ROW FOUR NO.	SIZE	Δ	DIST.	ROW FIVE NO.	SIZE	Δ	DIST.	ROW SIX NO.	SIZE	Δ	DIST.	ROW SEVEN NO.	SIZE	Δ	DIST.	ROW EIGHT NO.	SIZE	Δ	DIST.	ROW NINE NO.	SIZE	Δ	DIST.
4																												

DIMENSIONS

LENGTH – FT.
WDLNC – K/FT.
WDLC – K/FT.
WT. BM. – K/FT.
COPING – IN.
AL. STRESS – K.S.I.
WT. BM. MAT'L. – PCF
WSWK – K/FT.
X_n – FT.
P_n – KIPS
TYPE STEEL – 572, 588
DEPTH – IN.
THICK. – IN.
WEIGHT – LBS.
YTOP – IN.
ΣZ_r – K/ROW
X-BEG. – FT.
WIDTH – IN.
YBOT. – IN.
SU – K/EA.
SIZE – BAR SIZE (#4, #10, etc.)
Δ – INCREMENT (NO. OF BARS)
DIST. – IN.

SIMPLE SPAN INPUT DATA PROBLEM NUMBER PG-5

03/15/71 GIVEN LENGTH AND LOADS DESIGN A PEDESTRIAN OVERPASS

SPAN DATA

BEAM	D/A	L.L.C.	T L M	LENGTH	D.F.M.	D.F.V.	D.F.D.	NPL
PG	0	HS 0	0 0 1	134.000	1.273	1.429	0.800	5

WDLNC	WDLC	SWLL	E	W BM	FS	FC	WG	TYPE STEEL
0.389	0.0	0.298	29.00	0.0	0.0	0.0	0.490	36

CONCENTRATED LOADS

X1	P1	X2	P2	X3	P3	X4	P4
22.000	1.000	45.000	1.000	67.000	1.000	89.000	1.000
112.000	1.000	0.0	0.0	0.0	0.0	0.0	0.0

BEAM DATA

ROLLED		SECTION PROPERTIES			PLATE GIRDER WEB		TOP FLANGE		BOTTOM FLANGE	
BEAM	P NP	I	Y TOP	Y BOT	D	T	W	T	W	T
OWF	0 0 0	0.0	0.0	0.0	0.0	0.0	0.0	0.0	0.0	0.0
OWF	0									

BOTTOM COVER PLATE				TOP COVER PLATE				CONSTANT	
X-BEGIN	THICKNESS	WIDTH	LENGTH	X-BEGIN	THICKNESS	WIDTH	LENGTH	W	T
0.0	0.0	0.0	0.0	0.0	0.0	0.0	0.0	0	0

SIMPLE SPAN CUTPUT DATA PROBLEM NUMBER PG-5

PLATE GIRDER PROPERTIES

WEB		TOP FLANGE		BOTTOM FLANGE		WEB AND FLANGES PROPERTIES			
DEPTH	THICK	WIDTH	THICK	WIDTH	THICK	AREA	Y-TOP	Y-BOTTOM	I
72.00	0.5000	7.00	0.5000	7.00	0.5000	43.000	36.500	36.500	24750.6

WEB AND COVER PLATES

BOTTOM COVER PLATE				TOP COVER PLATE			
X-BEGIN	THICKNESS	WIDTH	LENGTH	X-BEGIN	THICKNESS	WIDTH	LENGTH
16.52	1.0000	12.00	100.96	16.52	1.0000	12.00	100.96

WEB WITH COVER PLATES PROPERTIES

AREA	Y-TOP	Y-BOTTOM	I
60.000	37.000	37.000	47528.0

NUMBER OF LONGITUDINAL STIFFENERS NEEDED 0

TRANSVERSE STIFFENERS NOT REQUIRED

SIMPLE SPAN OUTPUT DATA PROBLEM NUMBER PG-5

MOMENTS (K-FT.) AT SPAN 1/20 POINTS

SP	GIRDER	P-LOAD	NON-C.	TOT.NC	COMP.	SIDEWK	LIVE LOAD	RR-I
1	82.0	16.7	165.9	264.6	0.0	127.1	0.0 M	0.0
2	157.4	33.5	314.3	505.2	0.0	240.8	0.0 M	0.0
3	225.8	50.2	445.3	721.4	0.0	341.1	0.0 M	0.0
4	285.4	62.2	558.8	906.4	0.0	428.1	0.0 M	0.0
5	335.8	72.2	654.8	1062.9	0.0	501.6	0.0 M	0.0
6	377.0	82.3	733.4	1192.8	0.0	561.8	0.0 M	0.0
7	409.1	90.4	794.5	1294.1	0.0	608.7	0.0 M	0.0
8	432.0	93.8	838.2	1364.0	0.0	642.1	0.0 M	0.0
9	445.8	97.1	864.4	1407.3	0.0	662.2	0.0 M	0.0
10	450.4	100.5	873.1	1424.0	0.0	668.9	0.0 M	0.0

STRESS (PSI) AT SPAN 1/20 POINTS

	MINIMUM STRESS			MAXIMUM STRESS		ALLOWABLE	R FACTOR	
SP	TOP-S	BOT-S	TOP-C	TOP-S	BOT-S	FS	TOP-S	BOT-S
1	4682	-4682	0	6931	-6931	20000	0.676	0.676
2	8939	-8939	0	13201	-13201	20000	0.677	0.677
3	6738	-6738	0	9925	-9925	20000	0.679	0.679
4	8467	-8467	0	12466	-12466	20000	0.679	0.679
5	9929	-9929	0	14615	-14615	20000	0.679	0.679
6	11142	-11142	0	16391	-16391	20000	0.680	0.680
7	12089	-12089	0	17775	-17775	20000	0.680	0.680
8	12742	-12742	0	18740	-18740	20000	0.680	0.680
9	13146	-13146	0	19332	-19332	20000	0.680	0.680
10	13302	-13302	0	19550	-19550	20000	0.680	0.680

SHEARS (KIPS) AT SPAN 1/20 POINTS PG-5

SP	GIRDER	P-LOAD	NON-C.	TOT.NC	COMP.	SIDEWK	LIVE LOAD	RR-I
0	12.7	2.5	26.1	41.3	0.0	20.0	0.0 M	0.0
1	11.7	2.5	23.5	37.7	-0.0	18.0	0.0 M	0.0
2	10.8	2.5	20.9	34.1	-0.0	16.2	0.0 M	0.0
3	9.6	2.5	18.2	30.3	-0.0	14.4	0.0 M	0.0
4	8.2	1.5	15.6	25.3	-0.0	12.8	0.0 M	0.0
5	6.8	1.5	13.0	21.4	-0.0	11.2	0.0 M	0.0
6	5.5	1.5	10.4	17.4	-0.0	9.8	0.0 M	0.0
7	4.1	0.5	7.8	12.4	-0.0	8.4	0.0 M	0.0
8	2.7	0.5	5.2	8.4	-0.0	7.2	0.0 M	0.0
9	1.4	0.5	2.6	4.5	-0.0	6.0	0.0 M	0.0
10	0.0	0.5	0.0	0.5	-0.0	5.0	0.0 M	0.0

	DEAD LOAD DEFLECTIONS (INCHES)					SHEAR	
SP	GIRDER	P-LOAD	NON-C.	TOT.NC	COMP.	RANGE(KIPS)	CON.SPAC(IN)
0	0.0	0.0	0.0	0.0	0.0	20.0	0.0
1	0.176	0.038	0.344	0.559	-0.0	18.1	0.0
2	0.343	0.075	0.670	1.089	-0.0	16.4	0.0
3	0.497	0.108	0.970	1.575	-0.0	14.9	0.0
4	0.638	0.139	1.244	2.021	-0.0	13.6	0.0
5	0.763	0.167	1.486	2.416	-0.0	12.5	0.0
6	0.869	0.190	1.693	2.751	-0.0	11.6	0.0
7	0.954	0.208	1.857	3.020	-0.0	10.9	0.0
8	1.016	0.222	1.977	3.215	-0.0	10.4	0.0
9	1.054	0.230	2.051	3.335	-0.0	10.1	0.0
10	1.066	0.233	2.075	3.374	-0.0	10.0	0.0

LIVE LOAD DEFLECTIONS (INCHES)

TRUCK	LANE	MILITARY	RAILROAD	SIDEWALK	L/1000
0.0	0.0	0.0	0.0	1.590	1.608

VI. COMPOSITE PLATE GIRDER (CG)

INPUT DATA

A composite plate girder is any beam made up entirely of plates and attached to the concrete slab to create composite action. Refer to the input form in the following discussion of the input data. Also refer to the figure on page 6-22.

A. IDENTIFICATION (* in c.c. 1).

The IDENTIFICATION lines are used to supply any pertinent information about the bridge that the Engineer wishes to head the output listing. The project number, county, date, and the designer's name or initials should always be given. Card columns 2-4 of the first line are reserved for the program number.

Card columns 5-8 of the first line are reserved for the problem number. This space is always left blank by the Engineer since the problem number is assigned from the log book of the Bridge Division computer problems. The problem number is associated with any error messages and appears on the output listing.

Any number of IDENTIFICATION lines may be used to enter remarks, etc. Whenever more than one line (card) is used, the code "CONT" must be entered in card columns 65-68 of all lines (cards), except the last line, to indicate to the program that another IDENTIFICATION card will follow. If only one line (card) of IDENTIFICATION is used, "CONT" is not required.

B. SPAN DATA (1 in c.c. 1).

The SPAN DATA card gives information relating to the span, generally without regard to the type of beam under consideration. The digit one (1) in card column one is used for identification and is of no significance to the Engineer.

1. CODE (c.c. 2-4) Form: CGX

   a. TYPE (c.c. 2, 3) Form: CG

      Enter the TYPE of beam in card columns 2, 3. "CG" defines a Composite plate Girder.

   b. D/A (c.c. 4) Form: X (blank or 1).

      The digit one (1) indicates that a given section is to be analyzed, and a blank (or zero) indicates that the beam is to be designed (determined). Any other character is illegal.

2. LIVE LOAD (c.c. 5-11). This input data defines the class of live load and the various loads that are to be omitted. The live load is considered acting on the composite section (1 N).

   a. CLASS (c.c. 5-8)

      The LIVE LOAD CLASS is entered in card columns 5-8, i.e., HS20, H 15, RR80, etc. Following are the live loads considered by the program.

      HS20* (AASHO designation HS20-44)

      HS15 (AASHO designation HS15-44)

      H 20 (AASHO designation H20-44)

      H 15 (AASHO designation H15-44)

      H 10 (AASHO designation H10-44)

      (*This number can be increased or decreased by any amount to check the overstress provisions of the AASHO Specifications.)

The program uses 80% of the input value for the largest wheel load. Uniform lane load and concentrated lane loads are proportioned accordingly. Moments are computed with the wheel loads adjusted by impact and the distribution factor for moments (DFM). For the end reaction, the wheel at the support is adjusted by the impact factor and the distribution factor for shear (DFV). Intermediate shear values are computed with the wheel loads adjusted by the impact factor for the loaded span and the distribution factor for moments. Deflections are a function of the wheel loads adjusted by the impact factor and the distribution factor for deflections(DFD).

Railroad live loads:

RR80(AREA Cooper E 80 load).

RR72(AREA Cooper E 72 load).

RR* (AREA Cooper E ** load).

The program computes the moments, shears, and approximates the deflection for one rail adjusted by impact and distribution factors using one-half of the input value (80,72, etc.) as the largest wheel load.

b. T (c.c. 9) Form: X (blank or 1).

The truck live load can be eliminated from consideration by entering the digit one (1) in card column 9 when using a standard highway loading. Leave blank if truck loading is to be considered.

c. L (c.c. 10) Form: X (blank or 1).

The lane live load can be eliminated from consideration by entering the digit one (1) in card column 10 when using a standard highway loading. Leave blank if lane loading is to be considered.

d. M (c.c. 11) Form: X (blank or 1).

The military live load can be eliminated from consideration by entering the digit one (1) in card column 11 when using a standard highway loading. Leave blank if military loading is to be considered.

Sidewalk live load only can be achieved by placing 111 in T, L, M (c.c. 9, 10, 11) with a standard highway load. This eliminates the truck, lane, and military from consideration leaving the sidewalk load as the only live load when computing moments, stresses, shears and deflections.

The omission of truck, lane, and military live load has no meaning when railroad live load is designated.

3. LENGTH (c.c. 12-17) Form: XXX.XXX feet.

LENGTH is the design span length in feet from center line of bearing to center line of bearing.

4. DFM (c.c. 18-21) Form: X.XXX ratio.

DFM, the distribution factor for moments, is the proportion of one row of wheels for highway and railroad loadings acting on the beam for moment and intermediate shear. This factor cannot be zero.

5. DFV (c.c. 22-25) Form: X.XXX ratio.

DFV, the distribution factor for end shear, is the proportion of one wheel on the beam at the end support for highway live load. When railroad live load is indicated, DFV is the amount the loads are increased for impact.

6. DFD (c.c. 26-29) Form: X.XXX ratio.

DFD, the distribution factor for deflections, is the proportion

of one row of wheels for highway and railroad live loadings acting on the beam for calculating live load deflections. DFD is completely independent of DFM or DFV.

7. NPL (c.c. 30, 31) Form: XX (1-40).

NPL is the number of concentrated loads in the span.

A maximum of forty is available.

8. WDLnc (c.c. 32-35) Form: X.XXX kips per foot.

WDLnc is the weight of the uniform non-composite dead load (slab, coping, etc.) in kips per foot. The weight of the beam normally should not be included.

9. WDLc (c.c. 36-39) Form: X.XXX kips per foot.

WDLc is the weight of the uniform composite dead load (curb, handrail, utilities, future paving, future construction, etc.) in kips per foot. The N value used to convert the concrete to an equivalent steel area for this load is three times that used for the live load. Any composite concentrated loads must be included in this load.

10. WSWK (c.c. 40-43) Form: X.XXX kips per foot.

WSWK is the uniform sidewalk live load in kips per foot. The deflection resulting from this load is added to the highway (H, HS) or railroad (RR) live load deflection when checking to see if the allowable live load deflection (L/1000) is exceeded. It is assumed that the maximum sidewalk deflection and the maximum highway or railroad deflection would be coincidental.

11. E BEAM x 10^6 (c.c. 44-47) Form: XX.XX mpsi.

This is the Modulus of Elasticity of the beam material in million pounds per square inch, and is used in computing deflections. If a value of E equal to zero (0) is entered or this data field is left blank,the program will by-pass all computations for deflections.

12. WT.BM. (c.c. 48-51) Form: X.XXX kips per foot.

This is the uniform weight of the non-standard beam specified in "SECTION PROPERTIES", and is not used with a Composite Plate Girder.

13. ALLOWABLE STRESS (c.c. 52-59).

a. STEEL (c.c. 52-55) Form: XX.XX ksi.

STEEL is the allowable stress in ksi in the beam to determine which grade of A572 to consider, or the ALLOWABLE STRESS for other grades or metals. If this is left blank, TYPE STEEL will govern the allowable stress. The allowable steel stress is not required for A36, A441, or A588 types of steel.

b. CONC (c.c. 56-59) Form: X.XXX ksi.

This is the allowable stress in ksi in the concrete. If this data is blank (or zero) a value of 1.200 ksi is used.

14. WT.BM.MAT'L (c.c. 60-62) Form: XXX pounds per cu. ft.

This is the weight of the beam material in pounds per cubic foot. This data is required for the Composite Plate Girder (CG) span if the plates weigh other than 490 pounds per cubic foot.

15. TYPE STEEL (c.c. 63-65) Form: XXX (36,588, etc.)

The program has provisions to use A36 (enter 36), A441 (enter 441), A588 (enter 588), A572 (enter 572), or A514 (enter 514). When type A572 is used, the ALLOW. STRESS (STEEL card columns 52-55) must

be given to show which grade is to be considered. If STEEL (c.c. 52-55) and TYPE STEEL (c.c. 63-65) are both blank, type A36 steel allowable stresses are used.

C. CONCENTRATED LOADS (2 in c.c. 1)

Card columns one and two are used to keep the cards in sequence and contain 21, 22, 23, etc. to 30. The input data form shows four cards (the program has provisions for ten). When necessary, write between the lines or attach extra forms to provide space for the required CONCENTRATED LOADS.

1. Xn (c.c. 3-8, 15-20, 27-32, 39-44) Form: XXX.XXX feet.

   Xn is the distance in feet from the left support to the concentrated load (diaphragm, handrail post, utility pole, sign, etc.) Pn. The maximum number of loads is forty. The distance may or may not be of increasing magnitude from the left support.

2. Pn (c.c. 9-14, 21-26, 33-38, 45-50) Form: XXX.XXX kips.

   Pn is the concentrated load in kips.

D. STEEL BEAM DATA (3 in c.c. 1) This card is always necessary.

1. PLATE GIRDER (c.c. 36-65)

   a. WEB (c.c. 36-45) WEB governs the plate girder web for the full length of the span.

      (A) DEPTH (c.c. 36-40) Form: XXX.XX inches.

      DEPTH is the depth of the web in inches. If DEPTH is blank or zero, the program uses L/25 rounded to the next even foot as the DEPTH.

      (B) THICK (c.c. 41-45) Form: X.XXXX inches.

      THICK is the thickness in inches of the web. If THICK is blank or zero, a thickness which requires no longitudinal stiffeners is computed.

   b. TOP FLANGE (c.c. 46-54) The top flange governs the width and thickness of the top plate for the distance X-BEG (TOP COVER PLATE)

      (A) WIDTH (c.c. 46-49) Form: XX.XX inches.

WIDTH is the width in inches of the top flange. If the blank (or zero) is input, 10 inches is used for the first trial design.

(B) THICK (c.c. 50-54) Form: X.XXXX inches.

THICK is the thickness in inches of the top flange. If blank or zero, 0.5 inches is used for the first trial design.

c. BOTTOM FLANGE (c.c. 55-63) The bottom flange governs the width and thickness of the bottom plate for the distance X-BEG (BOTTOM COVER PLATE).

(A) WIDTH (c.c. 55-58) Form: XX.XX inches.

WIDTH is the width in inches of the bottom flange. If blank or zero, 12.0 inches is used for the first trial design.

(B) THICK (c.c. 59-63) Form: X.XXXX inches.

THICK is the thickness in inches of the bottom flange. If blank or zero, 0.5 inches is used for the first trial design.

d. CON (W, T) (c.c. 64, 65)

CON (W,T) are used by the designers if they wish the top and bottom plates to have the same width or thickness throughout.

(A) CON W (c.c. 64) Form: X (1 or blank)

If CON W is equal to one, the FLANGE plate and the COVER PLATE will have the same width.

(B) CON T (c.c. 65) Form: X (1 or blank)

If CON T is equal to one, the FLANGE plate and the COVER PLATE will have the same thickness.

E. COVER PLATE DATA (4 in c.c. 1) This card is always necessary.

The program has the capability to design or analyze a beam made from plates with a composite slab on the top, a top flange and cover plate, and a bottom flange and cover plate. The design process computes only one size for the top cover plate and makes the top flange have the same dimensions.

1. COMPOSITE SLAB (c.c. 2-16)

The weight of the composite slab should be included in WDLnc.

a. EFFECTIVE WIDTH (c.c. 2-7) Form: XXX.XXX inches.

This is the effective width of the composite slab in inches as defined by the AASHO Specifications. To achieve composite action, this width must always be given greater than zero.

b. THICK (c.c. 8-12) Form: XX.XXX inches.

THICK is the thickness in inches of the composite slab. This thickness must have a value greater than zero.

c. COPING (c.c. 13-16) Form: X.XXX inches.

COPING is the distance in inches from the top of the girder to the bottom of the composite slab. COPING can be zero.

2. SHEAR CONN. (c.c. 17-24)

Shear connectors are spaced in accordance with 1969 AASHO Specifications Article 1.7.101.

a. ΣZr (c.c. 17-20) Form: XX.XX kips per row.

ΣZr is the total allowable range of horizontal shear in kips on a row of connectors, including fatigue considerations.

b. Su (c.c. 21-24) Form: XX.XX kips each.

Su is the ultimate strength of an individual shear connector in kips. If this data is blank or zero, a value of 1.0 is used.

3. N (ES/Ec) (c.c. 25, 26) Form: XX ratio.

N is the ratio of the modulus of elasticity of steel to that of concrete. If N is zero or blank, a value of 10 is used. For composite dead load (WDLc), the N factor is multiplied by three.

4. BOTTOM COVER PLATE (c.c. 27-45)

a. X-BEG (c.c. 27-30) Form: XX.XX feet.

X-BEG is the distance in feet to the beginning of the bottom plate from the left support. Also, X-BEG is the length of the bottom flange on the left side. In a design problem (D/A=0), this distance is computed by the program.

b. THICK (c.c. 31-35) Form: X.XXXX inches.

THICK is the thickness in inches of the plate used on the bottom of the web at the end of X-BEG for a distance LENGTH (c.c. 40-45). If zero or blank is input, 0.5 inches is used as the first trial design (D/A=0) with a maximum of 1.5 inches or 4.0 inches, depending on the type of steel.

c. WIDTH (c.c. 36-39) Form: XX.XX inches.

WIDTH is the width in inches of the plate described in b. above. If blank or zero is input, a plate 12.0 inches wide is used as the first trial design.

d. LENGTH (c.c. 40-45) Form: XXX.XXX feet.

LENGTH is the length in feet of the plate described above.

5. TOP COVER PLATE (c.c. 46-64) The top cover plate makes possible the analysis of a beam with a change in thickness of the top flange. The design (D/A=0) uses the same top plate throughout the beam.

a. X-BEG (c.c. 46-49) Form: XX.XX feet

X-BEG is the distance in feet to the beginning of the cover plate from the left support. Also, X-BEG is the length of the TOP FLANGE on the left side of the span.

b. THICK (c.c. 50-54) Form: X.XXXX inches.

THICK is the thickness in inches of the top plate. If blank or zero, 0.5 inches is used in the first trial design.

c. WIDTH (c.c. 55-58) Form: XX.XX inches.

WIDTH is the width in inches of the top plate. When the problem is a design problem (D/A=0), the top plate has the same width throughout. If input as zero, 10.0 inches is used as the first trial design.

COMPOSITE PLATE GIRDER

OUTPUT DATA

A. The first page of the output listing contains the input data and should be checked to verify that the proper quantities were punched in the input data cards.

B. The second page of the output listing tabulates the PLATE GIRDER PROPERTIES, WEB AND COVER PLATES, WEB WITH COVER PLATES PROPERTIES, COMPOSITE SECTION PROPERTIES, NUMBER OF SHEAR CONNECTORS TO PROVIDE FOR ULTIMATE STRENGTH, LONGITUDINAL STIFFENERS, and TRANSVERSE STIFFENERS.

1. PLATE GIRDER PROPERTIES.

   a. WEB

      1) DEPTH is the web depth in inches.

      2) THICK is the web thickness in inches.

   b. TOP FLANGE

      1) WIDTH is the top flange width in inches.

      2) THICK is the top flange thickness in inches.

   c. BOTTOM FLANGE

      1) WIDTH is the width in inches of the bottom flange.

      2) THICK is the thickness in inches of the bottom flange.

   d. WEB AND FLANGES PROPERTIES

      1) AREA is the area in square inches of the WEB and FLANGES.

      2) Y-TOP and Y-BOTTOM are the distances to the top and bottom of the flanges from the neutral axis.

      3) I is the moment of inertia in inches to the fourth power of

the flanges and web.

e. WEB AND COVER PLATES heads the top and the bottom plate dimensions.

1) X-BEG is the distance in feet from the left support to the beginning of the BOTTOM/TOP COVER PLATE.

2) THICKNESS is the cover plate thickness in inches.

3) WIDTH is the COVER PLATE width in inches.

4) LENGTH is the COVER PLATE length in feet.

f. WEB WITH COVER PLATES PROPERTIES.

1) AREA is the area in square inches of the web with plates.

2) Y-TOP AND Y-BOTTOM are the distances to the top and bottom of the cover plates from the neutral axis.

3) I is the moment of inertia in inches to the fourth power of the web and cover plates.

g. COMPOSITE SECTION PROPERTIES.

1) WEB AND FLANGES

This tabulates the composite section properties of the web and flanges at the left support.

2) WEB AND PLATES

This tabulates the section properties of the web and plates with the composite slab at the centerline of the span.

(A) N is the ratio of the modulus of elasticity of steel to that of concrete used to compute the various properties. N and 3N properties are given.

(B) YTC is the distance in inches from the centroid to

the extreme fiber at the top of the concrete.

(C) YTS is the distance in inches from the centroid to the extreme fiber at the top of the beam or plate. If this distance is negative, the neutral axis is in the concrete and the computed stresses are not valid.

(D) YBS is the distance in inches from the centroid of the beam section to the extreme fiber at the bottom of the steel section.

(E) I is the moment of inertia in inches to the fourth power of the composite section.

(F) Q SLAB is the moment of area of the concrete slab in inches to the third power. This is used to compute the shear connector spacing.

h. NUMBER OF SHEAR CONNECTORS NEEDED TO PROVIDE FOR ULTIMATE STRENGTH is the result of the formula:

$$N_{sc} = \frac{2P}{0.85 \quad (Su)}$$

Where P is the minimum of

$$P = As\left(\frac{Fs}{.55}\right)$$

or

$$P = 0.85\left(\frac{Fc}{0.40}\right)(B)C$$

Where Su = the ultimate strength of a shear connector.

As = the total area of steel including cover plates.

Fs = the allowable stress in the steel.

.55 = the factor converting the allowable steel stress to yield strength.

Fc = the allowable stress in the concrete.

0.40 = the factor converting the allowable concrete stress to 28 day compressive strength.

B = the effective flange width in Article 1.7.99, AASHO Specs.

C = the thickness of the concrete slab.

0.85 = a reduction factor.

See AASHO Specifications (1969) Article 1.7.101.

i. NUMBER OF LONGITUDINAL STIFFENERS NEEDED.

The program assumes that no more than one stiffener will ever be required. If longitudinal stiffeners are required, a (1) one is printed here. A zero (0) indicates no longitudinal stiffeners are required.

j. TRANSVERSE STIFFENER SPACING (INCHES) AT SPAN 1/20 POINTS gives transverse stiffener spacing in inches. When stiffeners are not required, TRANSVERSE STIFFENERS NOT REQUIRED, is printed. If the output distance is zero (0.0), stiffeners are not required at this point. These spacings are maximums. The size of the stiffener must be determined by the Engineer.

C. The third page of the output listing tabulates the MOMENTS (K-FT.) and the STRESS (PSI) at the 1/20th points in the span for the left half of the span.

1. MOMENTS (K-FT.) AT SPAN 1/20 POINTS.

a. SP lists the span points in 20ths.

b. GIRDER lists the moments in kip-feet due to the weight of the girder only.

c. P-LOAD lists the moments in kip-feet due to the concentrated loads only.

d. NON-C lists the moments in kip-feet due to the uniform non-composite dead load (WDLnc) only.

e. TOT.NC lists the sum of the GIRDER, P-LOAD, and NON-C moments in kip-feet.

f. COMP. lists the moments in kip-feet due to the uniform composite dead load input (WDLc) only.

g. SIDEWK lists the moments in kip-feet due to the sidewalk live load.

h. LIVE LOAD lists the moments in kip-feet due to the live load. Moments due to highway live loads include impact while railroad moments do not include impact. The letter code after the moment indicates the type of live load that governs as follows:

1) T designates the moment is due to the truck live load.

2) L designates the moment is due to the lane live load.

3) M designates the moment is due to the military live load.

4) R designates the moment is due to the railroad live load.

i. RR-I lists the moment in kip-feet due to the railroad impact and is considered for railroad live load only.

2. STRESS (PSI) AT SPAN 1/20' POINTS.

A positive stress indicates compression. A negative stress indicates tension.

a. MINIMUM STRESS

1) SP lists the span point in 20ths.

2) TOP-S lists the minimum stress in psi at the top of the steel due to the dead loads.

3) BOT-S lists the minimum stress in psi at the bottom of the steel due to the dead loads.

b. MAXIMUM STRESS: If the problem is a design, the maximum stress should not exceed the allowable stress.

1) TOP-C lists the maximum stress in psi at the top of the concrete for a composite girder.

2) TOP-S lists the maximum stress in psi at the top of the steel due to the dead and live loads.

3) BOT-S lists the maximum stress in psi at the bottom of the steel due to the dead and live loads.

c. ALLOWABLE FS*lists the allowable stress in the steel (base metal) considering the type of steel. Fatigue is not considered in the design, i.e., base metal adjacent to continuous flange-web fillet welds does not control base metal allowable stress in simple spans.

d. R FACTOR

1) TOP-S lists the ratio of the minimum stress to the maximum stress at the top of the beam.

2) BOT-S lists the ratio of the minimum stress to the maximum stress at the bottom of the beam.

D. The fourth page of the output listing tabulates the SHEARS (KIPS), the SHEAR CON.SPAC (IN), and the LIVE LOAD DEFLECTIONS (INCHES).

Shear is not considered when designing a Composite Girder.

1. SHEARS (KIPS) AT SPAN 1/20 POINTS.

*Fatigue for base metal adjacent to butt weld is considered in ending cover plates.

a. SP lists the span point in 20ths.

b. GIRDER lists the shears in kips due to the weight of the girder only.

c. P-LOAD lists the shears in kips due to the concentrated loads only.

d. NON-C lists the shears in kips due to the uniform non-composite dead load only (WDLnc).

e. TOT.NC lists the total of GIRDER, P-LOAD, AND NON-C.

f. COMP. lists the shears in kips due to the uniform composite dead load only (WDLc).

g. SIDEWK lists the maximum positive shears in kips due to the sidewalk live load.

h. LIVE LOAD lists the maximum shears due to the standard highway or railroad live load. Shears due to highway live loads include impact while railroad shears do not include impact. The letter code after the shear value indicates the type of live load which controlled as follows:

   1) T designates the shear is due to the truck live load.

   2) L designates the shear is due to the lane live load.

   3) M designates the shear is due to the military live load.

   4) R designates the shear is due to the railroad live load.

i. RR-I lists the shears due to railroad impact and is considered with railroad live load only.

2. DEAD LOAD DEFLECTIONS (INCHES)

   a. SP lists the span point in 20ths.

b. GIRDER lists the deflection in inches due to the girder only.

c. P-LOAD lists the deflection in inches due to the concentrated loads only.

d. NON-C lists the deflection in inches due to the uniform non-composite dead load (WDLnc) only.

e. TOT.NC lists the total of GIRDER, P-LOAD, and NON-C.

f. COMP. lists the deflection due to the uniform composite dead load (WDLc) only.

3. SHEAR

a. RANGE (KIPS) lists the difference in the minimum and maximum shear envelopes (excluding dead loads). The loading condition creating the maximum positive shear is listed (T,L,M,R) under LIVE LOAD and SIDEWK. The loading condition creating the maximum negative shear is not identified. Therefore, the RANGE (KIPS) may be sidewalk combined with truck and lane, lane and military, or truck and military; depending on which loading condition results in the maximum negative shear and whether it is a different loading condition than results in the maximum positive shear.

b. CON.SPA (IN) lists the shear connector spacing in inches of one row of shear connectors. If this exceeds 24 inches (maximum allowed), the Engineer can change the number of connectors per row and adjust the spacing accordingly.

4. LIVE LOAD DEFLECTIONS (INCHES)

The live load deflections take into consideration impact (50/(L + 125)

or 30% maximum for highway liveloads and input (DFV) for railroad live loading), and the distribution factor (DFD) for deflections. If the problem is a design, the maximum live load deflection should not exceed the allowable live load deflection.

a. TRUCK lists the maximum deflection in inches at the center line of the span due to the specified (H or HS) truck loading.

b. LANE lists the maximum deflection in inches at the center line of the span due to the specified lane loading.

c. MILITARY lists the maximum deflection in inches at the center line of the span due to the military loading.

d. RAILROAD lists the deflection in inches computed by treating the maximum distributed moment, plus impact, due to the specified railroad live load at the center line of the span as the middle ordinate of a parabolic moment diagram. The beam is loaded with the resulting M/EI diagram and the center line deflection is computed by Simpson's rule for numerical integration. The results compare favorably (conservative by about 5%) with the deflection computed by using the actual M/EI diagram for the maximum moment at the centerline of a one hundred foot span.

e. SIDEWALK lists the deflection in inches at the center line of the span due to the sidewalk live load.

f. L/800 lists the allowable deflection in inches for highway live loads as the length of the span divided by eight hundred. L/640 lists the allowable deflection in inches for railroad live loads as the length of the span divided by six hundred forty. L/1000 lists the allowable deflection in inches when the sidewalk is loaded, as the length of the span divided by one thousand.

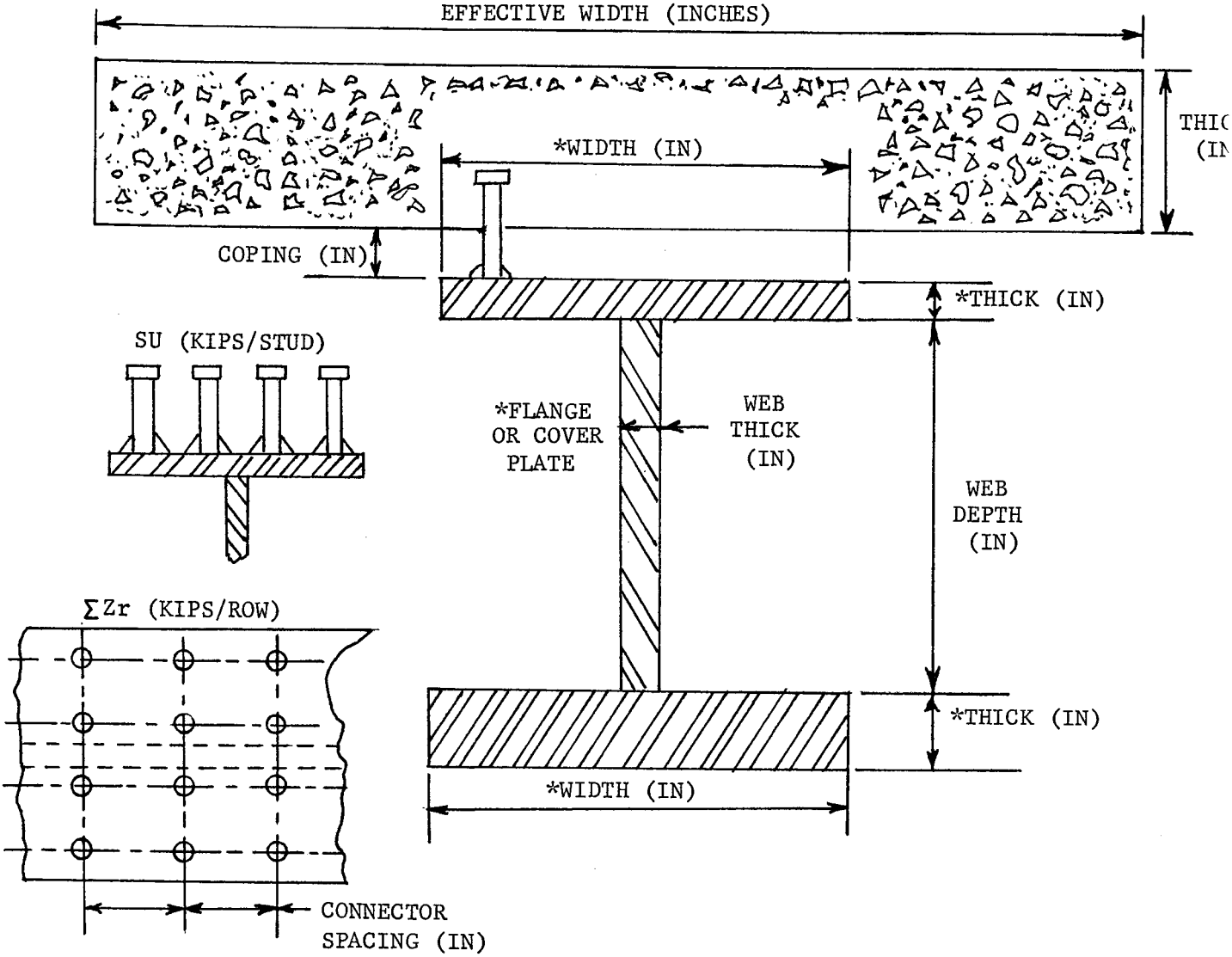

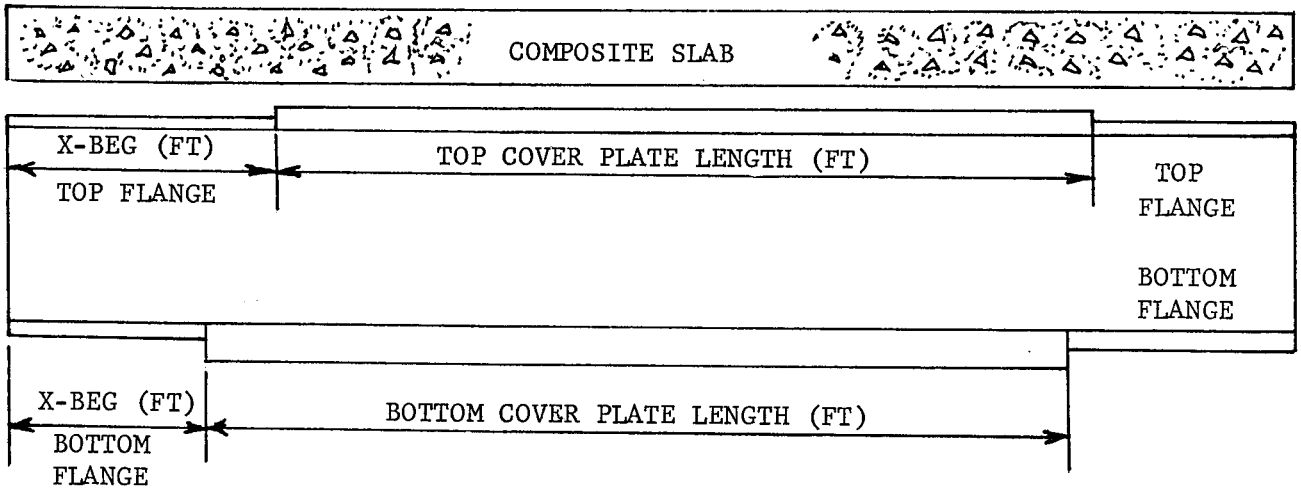

COMPOSITE PLATE GIRDER (CG)

COMPOSITE PLATE GIRDER

EXAMPLE PROBLEMS

The following example problems illustrate some uses of the program.

1. Design a composite girder using L/25 to determine the web depth and let the program also compute the web thickness along with the flange and plate dimensions. (See example CG-1 on page 6-25.)
2. Design a composite girder giving the preferred web depth and web thickness. The program then computes flange and plate dimensions. (See example CG-2 on page 6-30.)
3. Design a composite girder using the input web dimensions and the plate dimensions as minimum or starting sizes. (See example CG-3 on page 6-35.)
4. Design a composite girder giving length and loads only. (See example CG-4 on page 6-40.)
5. Analyze a given composite girder. (See example CG-5 on page 6-45.)

The following loading conditions are examined.

1. H20 excluding military, see example CG-1 on page 6-25.
2. HS20, see example CG-2 on page 6-30.
3. HS15 with sidewalk, see example CG-3 on page 6-35.
4. HS00 excluding military (sidewalk only) see example CG-4 on page 6-40.
5. RR80 (AREA Cooper E-80) see example CG-5 on page 6-45.

The allowable steel stresses are examined as indicated:

1. Type 572 steel, CG-1 on page 6-25, and CG-5 on page 6-45.
2. Type 36 steel, CG-2 on page 6-30, and CG-4 on page 6-40.
3. Type 588 steel, CG-3 on page 6-35.

To illustrate how the bottom plate and bottom flange have a constant width,

i.e., the thickness is allowed to vary. See example CG-1 on page 6-25.

To show the plate and flange with a constant thickness, i.e., the width is varied. See example CG-2 on page 6-30.

To illustrate how to keep the same bottom dimensions for both plate and flange (the program designs the top plate constant), see example CG-3 on page 6-35.

What happens when both the thickness and width, of the bottom plate and flange, are allowed to vary is shown in example CG-4 on page 6-40.

SIMPLE SPAN

10-15-70

STATE HIGHWAY DEPARTMENT OF GEORGIA
BRIDGE DIVISION

IDENTIFICATION

"CONT" TO CONTINUE REMARKS

PROG.	PROB. NO.	PROJECT NO.	COUNTY	DATE	DESIGNER	ETC.	CONT
* B04	CG-1	USE L/25 TO DETERMINE DEPTH OF WEB DESIGN COMPOSITE					CONT
* GIRDER KEEP BOTTOM PLATE WIDTH CONSTANT (VARY THE THICKNESS)							

SPAN DATA

CODE			LIVE LOAD				SPAN LENGTH	DFM	DFV	DFD	NPL	WDLNC	WDLC	WSWK	EBEAM X 10^6	WT.BM.	ALLOW. STRESS		WT.BM. MAT'L.	TYPE STEEL
	TYPE	D/A	CLASS	T	L	M											5/2 STEEL	5/6 CONC.		
1	CG		H 20		1	1	110.0	1.273	1.429	1.273	3	.644	.265		29.00		27.00	1.200	490	572

1 = ANALYSIS (D/A) 1 = SKIP (T, L, M)
BLANK = DESIGN (D/A)

CONCENTRATED LOADS (LIMIT 40)

		X1	P1	X2	P2	X3	P3	X4	P4
2	1	25.000	2.100	50.0	2.100	75.000	2.100		
2	2								
2	3								
2	4								

CODE: TYPE
RB – ROLLED BEAM
RP – ROLLED W/PLATE
CB – COMPOSITE ROLLED
PG – PLATE GIRDER
CG – COMPOSITE GIRDER
TB – CONCRETE BEAM

STEEL BEAM DATA

ROLLED BEAM						NON-STANDARD BEAM			PLATE GIRDER								
BEAM 1			BEAM 2				SECTION PROPERTIES			WEB		TOP FLANGE		BOTTOM FLANGE		CON. W	CON. T
DEPTH & WEIGHT			DEPTH & WEIGHT			P	N P	I_o IN.^{4}	YTOP	YBOT.	DEPTH	THICK.	WIDTH	THICK.	WIDTH	THICK.		
3		W.F			W.F						0.0	0.0					1	

1 = CONSTANT THICKNESS (T) WIDTH (W)

COMPOSITE SLAB			SHEAR CONN.		N	BOTTOM COVER PLATE				TOP COVER PLATE			
EFFECTIVE WIDTH	THICK.	COPING	ΣZr	SU	ES/EC	X-BEG.	THICK.	WIDTH	LENGTH	X-BEG.	THICK.	WIDTH	LENGTH
4 84.000	7.000	500	1.789	286.5	1.0								

P = 1 DESIGN WITH PL's
N.P. = 1 DESIGN WITHOUT PL's

CONCRETE BEAM DATA (T, RECT., FLAT SLAB)

"N"		NO.	BEAM (WEB) IN.				'T' SLAB		COMPRESSION ST.				ROW ONE				ROW TWO			
TEN.	COM.	ROWS	WIDTH	ΔW	DEPTH	ΔD	WIDTH	THICK.	NO.	SIZE	Δ	DIST.	NO.	SIZE	Δ	DIST.	NO.	SIZE	Δ	DIST.
3																				

ROW THREE				ROW FOUR				ROW FIVE				ROW SIX				ROW SEVEN				ROW EIGHT				ROW NINE			
NO.	SIZE	Δ	DIST.	NO.	SIZE	Δ	DIST.	NO.	SIZE	Δ	DIST.	NO.	SIZE	Δ	DIST.	NO.	SIZE	Δ	DIST.	NO.	SIZE	Δ	DIST.	NO.	SIZE	Δ	DIST.
4																											

DIMENSIONS

LENGTH – FT.
WDLNC – K/FT.
WDLC – K/FT.
WT. BM. – K/FT.
COPING – IN.
AL. STRESS – K.S.I.
WT. BM. MAT'L. – PCF
WSWK – K/FT.
X_n – FT.
P_n – KIPS.
TYPE STEEL – 572, 588
DEPTH – IN.
THICK. – IN.
WEIGHT – LBS.
YTOP – IN.
ΣZr – K/ROW
X-BEG. – FT.
WIDTH – IN.
YBOT. – IN.
SU – K/EA.
SIZE – BAR SIZE (#4, #10, etc.)
Δ – INCREMENT (NO. OF BARS)
DIST. – IN.

SIMPLE SPAN INPUT DATA PROBLEM NUMBER CG-1

03/15/71 USE L/25 TO DETERMINE DEPTH OF WEB DESIGN COMPOSITE CONT

GIRDER KEEP BOTTOM PLATE WIDTH CONSTANT (VARY THE THICKNESS)

SPAN DATA

BEAM	D/A	L.L.C.	T L M	LENGTH	D.F.M.	D.F.V.	D.F.D.	NPL
CG	0	H 20	0 0 1	100.000	1.273	1.429	1.273	3

WDLNC	WDLC	SWLL	E	W BM	FS	FC	WG	TYPE STEEL
0.644	0.265	C.0	29.00	0.0	27.00	1.200	0.490	572

CONCENTRATED LOADS

X1	P1	X2	P2	X3	P3	X4	P4
25.000	2.100	50.000	2.100	75.000	2.100	0.0	0.0

BEAM DATA

ROLLED			SECTION PROPERTIES			PLATE GIRDER WEB		TOP FLANGE		BOTTOM FLANGE	
BEAM	P	NP	I	Y TOP	Y BOT	D	T	W	T	W	T
OWF	0	0 0	0.C	C.0	0.0	0.0	0.0	0.0	0.0	0.0	0.0
OWF	0										

COMPOSITE SLAB

WIDTH	THICKNESS	COPING	SHEAR CAPACITY	ULTIMATE STRENGTH	N=ES/EC
84.000	7.000	C.5CC	17.89 K/ROW	28.65 KIPS EACH	10

BOTTOM COVER PLATE				TOP COVER PLATE				CONSTANT	
X-BEGIN	THICKNESS	WIDTH	LENGTH	X-BEGIN	THICKNESS	WIDTH	LENGTH	W	T
0.0	0.0	0.0	0.0	C.0	0.0	0.0	0.0	1	0

SIMPLE SPAN CUTPUT DATA PRCBLEM NUMBER CG-1

PLATE GIRDER PROPERTIES

WEB		TOP FLANGE		BOTTOM FLANGE		WEB AND FLANGES PROPERTIES			
DEPTH	THICK	WIDTH	THICK	WIDTH	THICK	AREA	Y-TOP	Y-BOTTOM	I
48.00	0.3750	10.00	1.0000	12.50	0.7500	37.375	24.559	25.191	15022.6

WEB AND COVER PLATES

BOTTOM COVER PLATE				TOP COVER PLATE			
X-BEGIN	THICKNESS	WIDTH	LENGTH	X-BEGIN	THICKNESS	WIDTH	LENGTH
15.86	1.5000	12.50	68.27	0.0	1.0000	10.00	100.00

WEB WITH COVER PLATES PROPERTIES

AREA	Y-TOP	Y-BOTTOM	I
46.750	29.686	20.814	19921.9

COMPOSITE SECTICN PROPERTIES

	WEB AND FLANGES					WEB AND PLATES				
N	YTC	YTS	YBS	I	Q SLAB	YTC	YTS	YBS	I	Q SLAB
10	14.60	7.10	42.65	33899.8	652.6	18.42	10.92	39.58	49714.5	877.3
30	22.23	14.73	35.02	25589.2		27.23	19.73	30.77	35672.7	

NUMBER OF SHEAR CONNECTORS NEEDED TO PROVIDE FOR ULTIMATE STRENGTH 124

NUMBER OF LONGITUDINAL STIFFENERS NEEDED 0

MAXIMUM TRANSVERSE STIFFENER SPACING (INCHES) AT SPAN 1/20 POINTS

0	1	2	3	4	5	6	7	8	9	10
27.	48.	48.	48.	48.	0.	0.	0.	0.	0.	0.

SIMPLE SPAN OUTPUT DATA PROBLEM NUMBER CG-1

MOMENTS (K-FT.) AT SPAN 1/20 POINTS

SP	GIRDER	P-LOAD	NON-C.	TOT.NC	COMP.	SIDEWK	LIVE LOAD	RR-I
1	35.6	15.7	152.9	204.3	62.9	0.0	184.8 L	0.0
2	68.1	31.5	289.8	389.4	119.2	0.0	350.1 L	0.0
3	97.4	47.2	410.5	555.2	168.9	0.0	495.9 L	0.0
4	123.2	63.0	515.2	701.4	212.0	0.0	622.4 L	0.0
5	145.1	78.7	603.7	827.6	248.4	0.0	729.3 L	0.0
6	163.0	84.0	676.2	923.2	278.2	0.0	816.8 L	0.0
7	176.9	89.2	732.5	998.7	301.4	0.0	884.9 L	0.0
8	186.9	94.5	772.8	1054.2	318.0	0.0	933.5 L	0.0
9	192.8	99.7	796.9	1089.5	327.9	0.0	962.7 L	0.0
10	194.8	105.0	805.0	1104.8	331.2	0.0	972.4 L	0.0

STRESS (PSI) AT SPAN 1/20 POINTS

	MINIMUM STRESS		MAXIMUM STRESS			ALLOWABLE	R FACTOR	
SP	TOP-S	BOT-S	TOP-C	TOP-S	BOT-S	FS	TOP-S	BOT-S
1	4443	-5145	117	4907	-7935	27000	0.905	0.648
2	8463	-9794	222	9343	-15079	27000	0.906	0.650
3	12059	-13946	314	13305	-21433	27000	0.906	0.651
4	13950	-10988	341	15590	-16934	27000	0.895	0.649
5	16448	-12947	400	18370	-19915	27000	0.895	0.650
6	18355	-14454	448	20508	-22258	27000	0.895	0.649
7	19859	-15641	485	22192	-24095	27000	0.895	0.649
8	20961	-16507	512	23421	-25426	27000	0.895	0.649
9	21659	-17053	528	24197	-26251	27000	0.895	0.650
10	21954	-17279	533	24518	-26570	27000	0.895	0.650

SHEARS (KIPS) AT SPAN 1/20 POINTS CG-1

SP	GIRDER	P-LOAD	NON-C.	TOT.NC	COMP.	SIDEWK	LIVE LOAD	RR-I
0	7.4	3.1	32.2	42.8	13.2	0.0	47.6 L	0.0
1	6.8	3.1	29.0	38.9	11.9	0.0	41.9 L	0.0
2	6.2	3.1	25.8	35.1	10.6	0.0	38.7 L	0.0
3	5.5	3.1	22.5	31.2	9.3	0.0	35.6 L	0.0
4	4.8	3.1	19.3	27.2	7.9	0.0	32.7 L	0.0
5	4.0	3.1	16.1	23.2	6.6	0.0	29.8 L	0.0
6	3.2	1.0	12.9	17.1	5.3	0.0	27.1 L	0.0
7	2.4	1.0	9.7	13.1	4.0	0.0	24.5 L	0.0
8	1.6	1.0	6.4	9.1	2.6	0.0	21.9 L	0.0
9	0.8	1.0	3.2	5.1	1.3	0.0	19.5 L	0.0
10	0.0	1.0	-0.0	1.0	-0.0	0.0	17.2 L	0.0

	DEAD LOAD DEFLECTIONS (INCHES)					SHEAR	
SP	GIRDER	P-LOAD	NON-C.	TOT.NC	COMP.	RANGE(KIPS)	CON.SPAC(IN)
0	0.0	0.0	0.0	0.0	0.0	47.6	19.52
1	0.100	0.051	0.416	0.567	0.096	43.2	21.52
2	0.196	0.100	0.817	1.114	0.189	41.3	22.48
3	0.286	0.146	1.190	1.622	0.275	39.7	23.42
4	0.367	0.188	1.526	2.081	0.352	38.4	26.42
5	0.439	0.225	1.823	2.487	0.421	37.2	27.26
6	0.500	0.256	2.076	2.832	0.479	36.1	28.09
7	0.549	0.281	2.278	3.108	0.525	35.2	28.78
8	0.584	0.300	2.425	3.309	0.559	34.8	29.16
9	0.606	0.311	2.514	3.431	0.580	34.5	29.40
10	0.613	0.315	2.544	3.473	0.586	34.4	29.50

LIVE LOAD DEFLECTIONS (INCHES)

TRUCK	LANE	MILITARY	RAILROAD	SIDEWALK	L/ 800
0.773	1.148	0.0	0.0	0.0	1.500

SIMPLE SPAN

STATE HIGHWAY DEPARTMENT OF GEORGIA
BRIDGE DIVISION

10-15-70

IDENTIFICATION

"CONT" TO CONTINUE REMARKS

PROG.	PROB. NO.	PROJECT NO.	COUNTY	DATE	DESIGNER	ETC.	CONT
* B.O.A	CG-2	USE GIVEN WEB DEPTH AND THICKNESS DESIGN FLANGES AND					CONT
* PLATES-THE BOTTOM PLATE WITH CONSTANT THICKNESS (VARY WIDTH)							

SPAN DATA

CODE	TYPE	D/A	LIVE LOAD CLASS	T	L	M	SPAN LENGTH	DFM	DFV	DFD	NPL	WDLNC	WDLC	WSWK	EBEAM X 10^6	WT.BM.	ALLOW. STRESS STEEL	ALLOW. STRESS CONC.	WT.BM. MAT'L.	TYPE STEEL
1	CG		HS20				144.000	1.273	1.429	1.000	5	.644	.265		2900			1200	490	36

1 = ANALYSIS (D/A) 1 = SKIP (T, L, M)
BLANK = DESIGN (D/A)

CONCENTRATED LOADS (LIMIT 40)

		X1	P1	X2	P2	X3	P3	X4	P4
2	1	24.000	2.100	48.000	2.100	72.000	2.100	96.000	2.100
2	2	120.0	2.100						
2	3								
2	4								

CODE: TYPE
RB – ROLLED BEAM
RP – ROLLED W/PLATE
CB – COMPOSITE ROLLED
PG – PLATE GIRDER
CG – COMPOSITE GIRDER
TB – CONCRETE BEAM

STEEL BEAM DATA

ROLLED BEAM						NON-STANDARD BEAM			PLATE GIRDER							
BEAM 1		BEAM 2		P	NP	SECTION PROPERTIES			WEB		TOP FLANGE		BOTTOM FLANGE		CONW	CONT
DEPTH & WEIGHT		DEPTH & WEIGHT				I_o IN.^{4}	YTOP	YBOT.	DEPTH	THICK.	WIDTH	THICK.	WIDTH	THICK.		
3	W.F		W.F						80.00	.500						1

1 = CONSTANT THICKNESS (T)
WIDTH (W)

COMPOSITE SLAB			SHEAR CONN.		N	BOTTOM COVER PLATE				TOP COVER PLATE			
EFFECTIVE WIDTH	THICK.	COPING	ΣZ_r	SU	ES/EC	X-BEG.	THICK.	WIDTH	LENGTH	X-BEG.	THICK.	WIDTH	LENGTH
4 84.000	7.000	.375	1.789	28.65	10								

P = 1 DESIGN WITH PL'S
N.P. = 1 DESIGN WITHOUT PL'S

CONCRETE BEAM DATA (T, RECT., FLAT SLAB)

"N"		NO.	BEAM (WEB) IN.				'T' SLAB		COMPRESSION ST.				ROW ONE				ROW TWO			
TEN.	COM.	ROWS	WIDTH	ΔW	DEPTH	ΔD	WIDTH	THICK.	NO.	SIZE	Δ	DIST.	NO.	SIZE	Δ	DIST.	NO.	SIZE	Δ	DIST.
3																				

ROW THREE				ROW FOUR				ROW FIVE				ROW SIX				ROW SEVEN				ROW EIGHT				ROW NINE			
NO.	SIZE	Δ	DIST.	NO.	SIZE	Δ	DIST.	NO.	SIZE	Δ	DIST.	NO.	SIZE	Δ	DIST.	NO.	SIZE	Δ	DIST.	NO.	SIZE	Δ	DIST.	NO.	SIZE	Δ	DIST.
4																											

DIMENSIONS

LENGTH – FT.
WDLNC – K/FT.
WDLC – K/FT.
WT. BM. – K/FT.
COPING – IN.
AL. STRESS – K.S.I.
WT. BM. MAT'L. – PCF
WSWK – K/FT.
X_n – FT.
P_n – KIPS.
TYPE STEEL – 572, 588
DEPTH – IN.
THICK. – IN.
WEIGHT – LBS.
YTOP – IN.
ΣZ_r – K/ROW
X-BEG. – FT.
WIDTH – IN.
YBOT. – IN.
SU – K/EA.
SIZE – BAR SIZE (#4, #10, etc.)
Δ – INCREMENT (NO. OF BARS)
DIST. – IN.

SIMPLE SPAN INPUT DATA PROBLEM NUMBER CG-2

03/15/71 USE GIVEN WEB DEPTH AND THICKNESS DESIGN FLANGES AND CONT

PLATES THE BOTTOM PLATE WITH CONSTANT THICKNESS (VARY WIDTH)

SPAN DATA

BEAM	D/A	L.L.C.	T L M	LENGTH	D.F.M.	D.F.V.	D.F.D.	NPL
CG	0	HS20	0 0 0	144.000	1.273	1.429	1.000	5

WDLNC	WDLC	SWLL	E	W BM	FS	FC	WG	TYPE STEEL
0.644	0.265	0.0	29.00	0.0	0.0	1.200	0.490	36

CONCENTRATED LOADS

X1	P1	X2	P2	X3	P3	X4	P4
24.000	2.100	48.000	2.100	72.000	2.100	96.000	2.100
120.000	2.100	0.0	0.0	0.0	0.0	0.0	0.0

BEAM DATA

ROLLED		SECTION PROPERTIES			PLATE GIRDER WEB		TOP FLANGE		BOTTOM FLANGE	
BEAM	P NP	I	Y TOP	Y BOT	D	T	W	T	W	T
OWF	0 0 0	0.0	0.0	0.0	80.00	0.5000	0.0	0.0	0.0	0.0
OWF	0									

COMPOSITE SLAB

WIDTH	THICKNESS	COPING	SHEAR CAPACITY	ULTIMATE STRENGTH	N=ES/EC
84.000	7.000	0.375	17.89 K/ROW	28.65 KIPS EACH	10

BOTTOM COVER PLATE				TOP COVER PLATE				CONSTANT	
X-BEGIN	THICKNESS	WIDTH	LENGTH	X-BEGIN	THICKNESS	WIDTH	LENGTH	W	T
0.0	0.0	0.0	0.0	0.0	0.0	0.0	0.0	0	1

SIMPLE SPAN OUTPUT DATA PROBLEM NUMBER CG-2

PLATE GIRDER PROPERTIES

WEB		TOP FLANGE		BOTTOM FLANGE		WEB AND FLANGES PROPERTIES			
DEPTH	THICK	WIDTH	THICK	WIDTH	THICK	AREA	Y-TOP	Y-BOTTOM	I
80.00	0.5000	10.00	2.5625	7.00	2.5625	83.563	38.765	46.360	94388.6

WEB AND COVER PLATES

BOTTOM COVER PLATE				TOP COVER PLATE			
X-BEGIN	THICKNESS	WIDTH	LENGTH	X-BEGIN	THICKNESS	WIDTH	LENGTH
34.30	2.5625	12.00	75.40	0.0	2.5625	10.00	144.00

WEB WITH COVER PLATES PROPERTIES

AREA	Y-TOP	Y-BOTTOM	I
96.375	44.758	40.367	116970.7

COMPOSITE SECTION PROPERTIES

	WEB AND FLANGES					WEB AND PLATES				
N	YTC	YTS	YBS	I	Q SLAB	YTC	YTS	YBS	I	Q SLAB
10	28.53	21.15	63.97	157379.8	1471.7	33.70	26.33	58.80	203583.6	1776.0
30	38.04	30.66	54.46	123333.8		43.91	36.54	48.59	155573.1	

NUMBER OF SHEAR CONNECTORS NEEDED TO PROVIDE FOR ULTIMATE STRENGTH 124

NUMBER OF LONGITUDINAL STIFFENERS NEEDED 0

MAXIMUM TRANSVERSE STIFFENER SPACING (INCHES) AT SPAN 1/20 POINTS

0	1	2	3	4	5	6	7	8	9	10
45.	80.	80.	80.	80.	80.	80.	80.	80.	80.	80.

SIMPLE SPAN OUTPUT DATA PROBLEM NUMBER CG-2

MOMENTS (K-FT.) AT SPAN 1/20 POINTS

SP	GIRDER	P-LOAD	NON-C.	TOT.NC	COMP.	SIDEWK	LIVE LOAD	RR-I
1	151.9	37.8	317.2	506.8	130.5	0.0	346.4 T	0.0
2	289.0	75.6	600.9	965.5	247.3	0.0	653.6 T	0.0
3	411.4	113.4	851.3	1376.1	350.3	0.0	921.7 T	0.0
4	519.0	141.1	1068.3	1728.5	439.6	0.0	1150.7 T	0.0
5	611.9	163.8	1251.9	2027.6	515.2	0.0	1340.5 T	0.0
6	688.4	186.5	1402.2	2277.0	577.0	0.0	1491.3 T	0.0
7	747.9	204.1	1519.0	2471.0	625.1	0.0	1607.1 T	0.0
8	790.4	211.7	1602.5	2604.5	659.4	0.0	1692.2 T	0.0
9	815.9	219.2	1652.6	2687.7	680.0	0.0	1738.2 T	0.0
10	824.4	226.8	1669.2	2720.4	686.9	0.0	1745.1 T	0.0

STRESS (PSI) AT SPAN 1/20 POINTS

	MINIMUM STRESS		MAXIMUM STRESS			ALLOWABLE	R FACTOR	
SP	TOP-S	BOT-S	TOP-C	TOP-S	BOT-S	FS	TOP-S	BOT-S
1	2887	-3678	91	3445	-5368	20000	0.838	0.685
2	5496	-7001	172	6550	-10189	20000	0.839	0.687
3	7826	-9966	243	9313	-14462	20000	0.840	0.689
4	9829	-12516	304	11685	-18129	20000	0.841	0.690
5	10762	-10327	324	12842	-14973	20000	0.838	0.690
6	12081	-11592	361	14395	-16760	20000	0.839	0.692
7	13107	-12575	389	15601	-18145	20000	0.840	0.693
8	13817	-13257	410	16443	-19121	20000	0.840	0.693
9	14257	-13678	422	16955	-19702	20000	0.841	0.694
10	14427	-13840	424	17135	-19888	20000	0.842	0.696

SHEARS (KIPS) AT SPAN 1/20 POINTS CG-2

SP	GIRDER	P-LOAD	NON-C.	TOT.NC	COMP.	SIDEWK	LIVE LOAD	RR-I
0	22.1	5.2	46.4	73.7	19.1	0.0	56.8 L	0.0
1	20.1	5.2	41.7	67.1	17.2	0.0	50.2 L	0.0
2	18.0	5.2	37.1	60.4	15.3	0.0	46.2 L	0.0
3	16.0	5.2	32.5	53.7	13.4	0.0	43.3 T	0.0
4	13.9	3.1	27.8	44.9	11.4	0.0	40.7 T	0.0
5	11.8	3.1	23.2	38.1	9.5	0.0	38.1 T	0.0
6	9.4	3.1	18.5	31.1	7.6	0.0	35.6 T	0.0
7	7.1	1.0	13.9	22.0	5.7	0.0	33.0 T	0.0
8	4.7	1.0	9.3	15.0	3.8	0.0	30.3 T	0.0
9	2.4	1.0	4.6	8.0	1.9	0.0	27.7 T	0.0
10	0.0	1.0	0.0	1.1	0.0	0.0	25.0 T	0.0

	DEAD LOAD DEFLECTIONS (INCHES)					SHEAR	
SP	GIRDER	P-LOAD	NON-C.	TOT.NC	COMP.	RANGE(KIPS)	CON.SPAC(IN)
0	0.0	0.0	0.0	0.0	0.0	56.8	33.68
1	0.153	0.041	0.313	0.507	0.097	51.7	37.02
2	0.301	0.081	0.615	0.998	0.191	49.7	38.52
3	0.440	0.119	0.898	1.457	0.279	48.7	39.32
4	0.565	0.153	1.153	1.871	0.359	48.8	39.24
5	0.674	0.182	1.373	2.229	0.427	49.2	41.71
6	0.765	0.207	1.558	2.530	0.484	49.5	41.40
7	0.838	0.226	1.706	2.770	0.530	49.7	41.22
8	0.891	0.241	1.814	2.946	0.563	49.9	41.10
9	0.923	0.250	1.880	3.052	0.583	50.0	41.03
10	0.934	0.253	1.902	3.088	0.590	50.0	41.01

LIVE LOAD DEFLECTIONS (INCHES)

TRUCK	LANE	MILITARY	RAILROAD	SIDEWALK	L/ 800
0.783	0.850	0.533	0.0	0.0	2.160

SIMPLE SPAN

STATE HIGHWAY DEPARTMENT OF GEORGIA
BRIDGE DIVISION

IDENTIFICATION

"CONT" TO CONTINUE REMARKS

PROG.	PROB. NO.	PROJECT NO.	COUNTY	DATE	DESIGNER	ETC.	
*	B.0.4	CG-3	USE GIVEN PLATES AND WEB AS BASIS FOR DESIGN KEERING				CONT
*	FLANGE AND PLATE DIMENSIONS CONSTANT THROUGH LENGTH						

SPAN DATA

CODE TYPE	D/A	LIVE LOAD CLASS	T	L	M	SPAN LENGTH	DFM	DFV	DFD	NPL	W_{DLNC}	W_{DLC}	W_{SWK}	$E_{BEAM} \times 10^6$	WT.BM.	ALLOW. STRESS STEEL	ALLOW. STRESS CONC.	WT.BM. MAT'L.	TYPE STEEL
CG		HS15				120.0	1.273	1.429	8.00	5	.777	.105	.283	29.00			1.200	490	588

1 = ANALYSIS (D/A) 1 = SKIP (T, L, M)
BLANK = DESIGN (D/A)

CONCENTRATED LOADS (LIMIT 40)

	X1	P1	X2	P2	X3	P3	X4	P4
2 1	20.0	2100	40.0	2100	60.0	2100	80.0	2100
2 2	10.0	2100						
2 3								
2 4								

CODE: TYPE
RB – ROLLED BEAM
RP – ROLLED W/PLATE
CB – COMPOSITE ROLLED
PG – PLATE GIRDER
CG – COMPOSITE GIRDER
TB – CONCRETE BEAM

STEEL BEAM DATA

ROLLED BEAM: BEAM 1 DEPTH & WEIGHT	BEAM 2 DEPTH & WEIGHT	P	N.P.	NON-STANDARD BEAM: SECTION PROPERTIES I_o IN.^{4}	Y_{TOP}	Y_{BOT}	PLATE GIRDER: WEB DEPTH	WEB THICK.	TOP FLANGE WIDTH	TOP FLANGE THICK.	BOTTOM FLANGE WIDTH	BOTTOM FLANGE THICK.	CON. W	CON. T
W.F	W.F						60	.375					1	1

1 = CONSTANT THICKNESS (T) WIDTH (W)

COMPOSITE SLAB: EFFECTIVE WIDTH	THICK.	COPING	SHEAR CONN. ΣZ_r	S_u	N ES/EC	BOTTOM COVER PLATE: X-BEG.	THICK.	WIDTH	LENGTH	TOP COVER PLATE: X-BEG.	THICK.	WIDTH	LENGTH
82500	6875	.375	1789	2865	10		1.0	1200			1.0	1000	

P = 1 DESIGN WITH PL's
N.P. = 1 DESIGN WITHOUT PL's

CONCRETE BEAM DATA (T, RECT., FLAT SLAB)

"N" TEN.	"N" COM.	NO. ROWS	BEAM (WEB) IN. WIDTH	ΔW	DEPTH	ΔD	'T' SLAB WIDTH	THICK.	COMPRESSION ST. NO.	SIZE	Δ	DIST.	ROW ONE NO.	SIZE	Δ	DIST.	ROW TWO NO.	SIZE	Δ	DIST.

ROW THREE NO.	SIZE	Δ	DIST.	ROW FOUR NO.	SIZE	Δ	DIST.	ROW FIVE NO.	SIZE	Δ	DIST.	ROW SIX NO.	SIZE	Δ	DIST.	ROW SEVEN NO.	SIZE	Δ	DIST.	ROW EIGHT NO.	SIZE	Δ	DIST.	ROW NINE NO.	SIZE	Δ	DIST.

DIMENSIONS

LENGTH – FT.
W_{DLNC} – K/FT.
W_{DLC} – K/FT.
WT. BM. – K/FT.
COPING – IN.
AL. STRESS – K.S.I.
WT. BM. MAT'L. – PCF
W_{SWK} – K/FT.
X_n – FT.
P_n – KIPS
TYPE STEEL – 572, 588
DEPTH – IN.
THICK. – IN.
WEIGHT – LBS.
Y_{TOP} – IN.
ΣZ_r – K/ROW
X-BEG. – FT.
WIDTH – IN.
Y_{BOT}. – IN.
S_u – K/EA.
SIZE – BAR SIZE (#4, #10, etc.)
Δ – INCREMENT (NO. OF BARS)
DIST. – IN.

SIMPLE SPAN INPUT DATA PROBLEM NUMBER CG-3

03/15/71 USE GIVEN PLATES AND WEB AS BASIS FOR DESIGN KEEPING CONT

FLANGE AND PLATE DIMENSIONS CONSTANT THROUGH LENGTH

SPAN DATA

BEAM	D/A	L.L.C.	T L M	LENGTH	D.F.M.	D.F.V.	D.F.D.	NPL
CG	0	HS15	C O C	120.000	1.273	1.429	0.800	5

WDLNC	WDLC	SWLL	E	W BM	FS	FC	WG	TYPE STEEL
0.777	0.105	0.283	29.00	0.0	0.0	1.200	0.490	588

CONCENTRATED LOADS

X1	P1	X2	P2	X3	P3	X4	P4
20.000	2.100	40.000	2.100	60.000	2.100	80.000	2.100
100.000	2.100	0.0	0.0	0.0	0.0	0.0	0.0

BEAM DATA

ROLLED		SECTION PROPERTIES			PLATE GIRDER WEB		TOP FLANGE		BOTTOM FLANGE	
BEAM	P NP	I	Y TOP	Y BOT	D	T	W	T	W	T
OWF	0 0 0	0.0	0.0	0.0	60.00	0.3750	0.0	0.0	0.0	0.0
OWF	0									

COMPOSITE SLAB

WIDTH	THICKNESS	COPING	SHEAR CAPACITY	ULTIMATE STRENGTH	N=ES/EC
82.500	6.875	0.375	17.89 K/ROW	28.65 KIPS EACH	10

BOTTOM COVER PLATE				TOP COVER PLATE				CONSTANT	
X-BEGIN	THICKNESS	WIDTH	LENGTH	X-BEGIN	THICKNESS	WIDTH	LENGTH	W	T
0.0	1.0000	12.00	0.0	0.0	1.0000	10.00	0.0	1	1

SIMPLE SPAN OUTPUT DATA PROBLEM NUMBER CG-3

PLATE GIRDER PROPERTIES

WEB		TOP FLANGE		BOTTOM FLANGE		WEB AND FLANGES PROPERTIES			
DEPTH	THICK	WIDTH	THICK	WIDTH	THICK	AREA	Y-TOP	Y-BOTTOM	I
60.00	0.3750	10.00	1.3750	12.00	2.0000	60.250	36.720	26.655	41051.4

WEB AND COVER PLATES

BOTTOM COVER PLATE				TOP COVER PLATE			
X-BEGIN	THICKNESS	WIDTH	LENGTH	X-BEGIN	THICKNESS	WIDTH	LENGTH
47.89	2.0000	12.00	24.22	0.0	1.3750	10.00	120.00

WEB WITH COVER PLATES PROPERTIES

AREA	Y-TOP	Y-BOTTOM	I
60.250	36.720	26.655	41051.4

COMPOSITE SECTION PROPERTIES

	WEB AND FLANGES					WEB AND PLATES				
N	YTC	YTS	YBS	I	Q SLAB	YTC	YTS	YBS	I	Q SLAB
10	24.32	17.07	46.31	89272.9	1184.2	24.32	17.07	46.31	89272.9	1184.2
30	34.29	27.04	36.34	64768.1		34.29	27.04	36.34	64768.1	

NUMBER OF SHEAR CONNECTORS NEEDED TO PROVIDE FOR ULTIMATE STRENGTH 119

NUMBER OF LONGITUDINAL STIFFENERS NEEDED 1

MAXIMUM TRANSVERSE STIFFENER SPACING (INCHES) AT SPAN 1/20 POINTS

0	1	2	3	4	5	6	7	8	9	10
27.	58.	60.	60.	60.	60.	60.	60.	60.	60.	60.

SIMPLE SPAN OUTPUT DATA PROBLEM NUMBER CG-3

MOMENTS (K-FT.) AT SPAN 1/20 POINTS

SP	GIRDER	P-LOAD	NCN-C.	TOT.NC	COMP.	SIDEWK	LIVE LOAD	RR-I
1	70.1	31.5	265.7	367.3	35.9	96.8	216.6 T	0.0
2	132.9	63.0	503.5	699.3	68.0	183.4	408.3 T	0.0
3	188.2	94.5	713.3	996.0	96.4	259.8	575.3 T	0.0
4	236.2	117.6	895.1	1248.9	121.0	326.0	717.3 T	0.0
5	276.8	136.5	1048.9	1462.2	141.7	382.0	834.6 T	0.0
6	310.0	155.4	1174.8	1640.2	158.8	427.9	927.0 T	0.0
7	335.8	170.1	1272.7	1778.6	172.0	463.6	997.8 T	0.0
8	354.3	176.4	1342.7	1873.3	181.4	489.0	1050.3 T	0.0
9	365.3	182.7	1384.6	1932.7	187.1	504.3	1077.9 T	0.0
10	369.0	189.0	1398.6	1956.6	189.0	509.4	1080.6 T	0.0

STRESS (PSI) AT SPAN 1/20 POINTS

	MINIMUM STRESS		MAXIMUM STRESS			ALLOWABLE	R FACTOR	
SP	TOP-S	BOT-S	TOP-C	TOP-S	BOT-S	FS	TOP-S	BOT-S
1	4122	-3104	110	4841	-5054	27000	0.852	0.614
2	7847	-5907	207	9204	-9590	27000	0.853	0.616
3	11173	-8409	293	13089	-13607	27000	0.854	0.618
4	14011	-10545	366	16404	-17039	27000	0.854	0.619
5	16405	-12347	427	19196	-19920	27000	0.855	0.620
6	18401	-13848	476	21509	-22282	27000	0.855	0.621
7	19953	-15016	514	23305	-24113	27000	0.856	0.623
8	21017	-15817	541	24548	-25399	27000	0.856	0.623
9	21682	-16318	556	25311	-26166	27000	0.857	0.624
10	21949	-16517	559	25596	-26415	27000	0.858	0.625

SHEARS (KIPS) AT SPAN 1/20 POINTS CG-3

SP	GIRDER	P-LOAD	NON-C.	TOT.NC	COMP.	SIDEWK	LIVE LOAD	RR-I
0	12.3	5.2	46.6	64.2	6.3	17.0	40.4 T	0.0
1	11.1	5.2	42.0	58.3	5.7	15.3	36.3 T	0.0
2	9.8	5.2	37.3	52.4	5.0	13.8	34.3 T	0.0
3	8.6	5.2	32.6	46.5	4.4	12.3	32.4 T	0.0
4	7.4	3.1	28.0	38.5	3.8	10.9	30.4 T	0.0
5	6.2	3.1	23.3	32.6	3.1	9.6	28.5 T	0.0
6	4.9	3.1	18.6	26.7	2.5	8.3	26.5 T	0.0
7	3.7	1.0	14.0	18.7	1.9	7.2	24.5 T	0.0
8	2.5	1.0	9.3	12.8	1.3	6.1	22.5 T	0.0
9	1.2	1.0	4.7	6.9	0.6	5.1	20.6 M	0.0
10	-0.0	1.0	-0.0	1.0	-0.0	4.2	18.8 M	0.0

	DEAD LOAD DEFLECTIONS (INCHES)					SHEAR	
SP	GIRDER	P-LOAD	NON-C.	TOT.NC	COMP.	RANGE(KIPS)	CON.SPAC(IN)
0	0.0	0.0	0.0	0.0	0.0	57.4	23.50
1	0.128	0.064	0.485	0.676	0.042	52.9	25.47
2	0.252	0.126	0.956	1.334	0.082	51.6	26.16
3	0.370	0.185	1.401	1.955	0.120	50.3	26.79
4	0.477	0.239	1.809	2.524	0.155	49.3	27.37
5	0.572	0.286	2.170	3.028	0.186	48.4	27.89
6	0.653	0.327	2.476	3.456	0.212	47.6	28.33
7	0.718	0.359	2.721	3.799	0.233	47.0	28.70
8	0.765	0.383	2.900	4.048	0.248	46.4	29.05
9	0.794	0.397	3.009	4.200	0.258	46.1	29.27
10	0.803	0.402	3.045	4.251	0.261	46.0	29.32

LIVE LOAD DEFLECTIONS (INCHES)

TRUCK	LANE	MILITARY	RAILROAD	SIDEWALK	L/1000
0.603	0.573	0.553	0.0	0.510	1.440

SIMPLE SPAN

STATE HIGHWAY DEPARTMENT OF GEORGIA
BRIDGE DIVISION

10-15-70

IDENTIFICATION

"CONT" TO CONTINUE REMARKS

	PROG.	PROB. NO.	PROJECT NO.	COUNTY	DATE	DESIGNER	ETC.
*	B,0,4	CG-A	GIVEN LENGTH AND LOADS DESIGN A PEDESTRIAN OVERPASS				
*							

SPAN DATA

	CODE TYPE	D/A	LIVE LOAD CLASS	T	L	M	SPAN LENGTH	DFM	DFV	DFD	NPL	W_{DLNC}	W_{DLC}	W_{SWK}	E BEAM X 10^6	WT.BM.	ALLOW. STRESS STEEL	ALLOW. STRESS CONC.	WT.BM. MAT'L.	TYPE STEEL
1	CG		HS,00			1	134,000	1,273	1,429	,800	5	,389	,133	,298	2900			1,200		36

1 = ANALYSIS (D/A) 1 = SKIP (T, L, M)
BLANK = DESIGN (D/A)

CONCENTRATED LOADS (LIMIT 40)

		X1	P1	X2	P2	X3	P3	X4	P4
2	1	22000	,560	45000	,560	67000	,560	89000	,560
2	2	11200	,560						
2	3								
2	4								

CODE: TYPE
RB – ROLLED BEAM
RP – ROLLED W/PLATE
CB – COMPOSITE ROLLED
PG – PLATE GIRDER
CG – COMPOSITE GIRDER
TB – CONCRETE BEAM

STEEL BEAM DATA

	ROLLED BEAM BEAM 1 DEPTH & WEIGHT		BEAM 2 DEPTH & WEIGHT		P	NP	NON-STANDARD BEAM SECTION PROPERTIES I_o IN.^{4}	Y TOP	Y BOT.	PLATE GIRDER WEB DEPTH	WEB THICK.	TOP FLANGE WIDTH	TOP FLANGE THICK.	BOTTOM FLANGE WIDTH	BOTTOM FLANGE THICK.	CONT W	CONT T
3		W,F		W,F												0	0

1 = CONSTANT THICKNESS (T) WIDTH (W)

	COMPOSITE SLAB EFFECTIVE WIDTH	THICK.	COPING	SHEAR CONN. ΣZ_r	SU	N ES/EC	BOTTOM COVER PLATE X-BEG.	THICK.	WIDTH	LENGTH	TOP COVER PLATE X-BEG.	THICK.	WIDTH	LENGTH
4	42000	7000	,375	5,96	28,65	10								

P = 1 DESIGN WITH ℞'s
N.P. = 1 DESIGN WITHOUT ℞'s

CONCRETE BEAM DATA (T, RECT., FLAT SLAB)

	"N" TEN.	COM.	NO. ROWS	BEAM (WEB) IN. WIDTH	ΔW	DEPTH	ΔD	'T' SLAB WIDTH	THICK.	COMPRESSION ST. NO.	SIZE	Δ	DIST.	ROW ONE NO.	SIZE	Δ	DIST.	ROW TWO NO.	SIZE	Δ	DIST.
3																					

	ROW THREE NO.	SIZE	Δ	DIST.	ROW FOUR NO.	SIZE	Δ	DIST.	ROW FIVE NO.	SIZE	Δ	DIST.	ROW SIX NO.	SIZE	Δ	DIST.	ROW SEVEN NO.	SIZE	Δ	DIST.	ROW EIGHT NO.	SIZE	Δ	DIST.	ROW NINE NO.	SIZE	Δ	DIST.
4																												

LENGTH – FT.
W_{DLNC} – K/FT.
W_{DLC} – K/FT.
WT. BM. – K/FT.

COPING – IN.
AL. STRESS – K.S.I.
WT. BM. MAT'L. – PCF
W_{SWK} – K/FT.
X_n – FT.

DIMENSIONS
P_n – KIPS.
TYPE STEEL – 572, 588
DEPTH – IN.
THICK. – IN.

WEIGHT – LBS.
Y TOP – IN.
ΣZ_r – K/ROW
X-BEG. – FT.
WIDTH – IN.

Y BOT. – IN.
SU – K/EA.
SIZE – BAR SIZE (#4, #10, etc.)
Δ – INCREMENT (NO. OF BARS)
DIST. – IN.

SIMPLE SPAN INPUT DATA PROBLEM NUMBER CG-4

03/15/71 GIVEN LENGTH AND LOADS DESIGN A PEDESTRIAN OVERPASS

SPAN DATA

BEAM	D/A	L.L.C.	T L M	LENGTH	D.F.M.	D.F.V.	D.F.D.	NPL
CG	0	HS 0	0 0 1	134.000	1.273	1.429	0.800	5

WDLNC	WDLC	SWLL	E	W BM	FS	FC	WG	TYPE STEEL
0.389	0.133	0.298	29.00	0.0	0.0	1.200	0.0	36

CONCENTRATED LOADS

X1	P1	X2	P2	X3	P3	X4	P4
22.000	0.560	45.000	0.560	67.000	0.560	89.000	0.560
112.000	0.560	0.0	0.0	0.0	0.0	0.0	0.0

BEAM DATA

ROLLED		SECTION PROPERTIES			PLATE GIRDER WEB		TOP FLANGE		BOTTOM FLANGE	
BEAM	P NP	I	Y TOP	Y BOT	D	T	W	T	W	T
OWF	0 0 0	0.0	0.0	0.0	0.0	0.0	0.0	0.0	0.0	0.0
OWF	0									

COMPOSITE SLAB

WIDTH	THICKNESS	COPING	SHEAR CAPACITY	ULTIMATE STRENGTH	N=ES/EC
42.000	7.000	0.375	5.96 K/ROW	28.65 KIPS EACH	10

BOTTOM COVER PLATE				TOP COVER PLATE				CONSTANT	
X-BEGIN	THICKNESS	WIDTH	LENGTH	X-BEGIN	THICKNESS	WIDTH	LENGTH	W	T
0.0	0.0	0.0	0.0	0.0	0.0	0.0	0.0	0	0

SIMPLE SPAN OUTPUT DATA PROBLEM NUMBER CG-4

PLATE GIRDER PROPERTIES

WEB		TOP FLANGE		BOTTOM FLANGE		WEB AND FLANGES PROPERTIES			
DEPTH	THICK	WIDTH	THICK	WIDTH	THICK	AREA	Y-TOP	Y-BOTTOM	I
72.00	0.5000	10.00	1.0000	7.00	0.5625	49.938	32.552	41.011	33070.3

WEB AND COVER PLATES

BOTTOM COVER PLATE				TOP COVER PLATE			
X-BEGIN	THICKNESS	WIDTH	LENGTH	X-BEGIN	THICKNESS	WIDTH	LENGTH
21.44	1.1250	12.00	91.12	0.0	1.0000	10.00	134.00

WEB WITH COVER PLATES PROPERTIES

AREA	Y-TOP	Y-BOTTOM	I
59.500	39.161	34.964	46645.9

COMPOSITE SECTION PROPERTIES

	WEB AND FLANGES					WEB AND PLATES				
N	YTC	YTS	YBS	I	Q SLAB	YTC	YTS	YBS	I	Q SLAB
10	26.43	19.05	54.51	57744.9	674.1	32.30	24.93	49.20	83210.3	846.8
30	33.95	26.58	46.99	43980.6		40.45	33.08	41.05	62269.8	

NUMBER OF SHEAR CONNECTORS NEEDED TO PROVIDE FOR ULTIMATE STRENGTH 62

NUMBER OF LONGITUDINAL STIFFENERS NEEDED 0

TRANSVERSE STIFFENERS NOT REQUIRED

SIMPLE SPAN OUTPUT DATA PROBLEM NUMBER CG-4

MOMENTS (K-FT.) AT SPAN 1/20 POINTS

SP	GIRDER	P-LOAD	NON-C.	TOT.NC	COMP.	SIDEWK	LIVE LOAD	RR-I
1	82.4	9.4	165.9	257.7	56.7	127.1	0.0 M	0.0
2	157.2	18.8	314.3	490.2	107.5	240.8	0.0 M	0.0
3	224.3	28.1	445.3	697.7	152.2	341.1	0.0 M	0.0
4	283.4	34.8	558.8	877.0	191.1	428.1	0.0 M	0.0
5	333.3	40.5	654.8	1028.6	223.9	501.6	0.0 M	0.0
6	374.2	46.1	733.4	1153.7	250.8	561.8	0.0 M	0.0
7	406.1	50.7	794.5	1251.2	271.7	608.7	0.0 M	0.0
8	428.8	52.5	838.2	1319.5	286.6	642.1	0.0 M	0.0
9	442.4	54.4	864.4	1361.2	295.5	662.2	0.0 M	0.0
10	447.0	56.3	873.1	1376.3	298.5	668.9	0.0 M	0.0

STRESS (PSI) AT SPAN 1/20 POINTS

	MINIMUM STRESS		MAXIMUM STRESS			ALLOWABLE	R FACTOR	
SP	TOP-S	BOT-S	TOP-C	TOP-S	BOT-S	FS	TOP-S	BOT-S
1	3454	-4561	87	3957	-6001	20000	0.873	0.760
2	6569	-8673	165	7523	-11400	20000	0.873	0.761
3	9345	-12335	234	10696	-16199	20000	0.874	0.761
4	10052	-9399	249	11591	-12436	20000	0.867	0.756
5	11790	-11023	291	13593	-14582	20000	0.867	0.756
6	13221	-12361	326	15241	-16347	20000	0.867	0.756
7	14337	-13403	354	16525	-17721	20000	0.868	0.756
8	15119	-14135	373	17428	-18690	20000	0.868	0.756
9	15597	-14581	385	17977	-19279	20000	0.868	0.756
10	15768	-14741	389	18173	-19486	20000	0.868	0.756

SHEARS (KIPS) AT SPAN 1/20 POINTS CG-4

SP	GIRDER	P-LOAD	NON-C.	TOT.NC	COMP.	SIDEWK	LIVE LOAD	RR-I
0	12.9	1.4	26.1	40.3	8.9	20.0	0.0 M	0.0
1	11.7	1.4	23.5	36.6	8.0	18.0	0.0 M	0.0
2	10.6	1.4	20.9	32.8	7.1	16.2	0.0 M	0.0
3	9.5	1.4	18.2	29.1	6.2	14.4	0.0 M	0.0
4	8.1	0.8	15.6	24.6	5.3	12.8	0.0 M	0.0
5	6.8	0.8	13.0	20.7	4.5	11.2	0.0 M	0.0
6	5.4	0.8	10.4	16.7	3.6	9.8	0.0 M	0.0
7	4.1	0.3	7.8	12.2	2.7	8.4	0.0 M	0.0
8	2.7	0.3	5.2	8.2	1.8	7.2	0.0 M	0.0
9	1.4	0.3	2.6	4.2	0.9	6.0	0.0 M	0.0
10	0.0	0.3	0.0	0.3	0.0	5.0	0.0 M	0.0

	DEAD LOAD DEFLECTIONS (INCHES)					SHEAR	
SP	GIRDER	P-LOAD	NON-C.	TOT.NC	COMP.	RANGE(KIPS)	CON.SPAC(IN)
0	0.0	0.0	0.0	0.0	0.0	20.0	25.57
1	0.178	0.022	0.350	0.550	0.090	18.1	28.26
2	0.349	0.043	0.686	1.079	0.176	16.4	31.18
3	0.508	0.063	0.998	1.568	0.256	14.9	34.32
4	0.651	0.080	1.277	2.008	0.327	13.6	43.13
5	0.777	0.096	1.524	2.397	0.391	12.5	46.93
6	0.884	0.109	1.734	2.728	0.444	11.6	50.57
7	0.970	0.120	1.902	2.992	0.487	10.9	53.82
8	1.033	0.127	2.025	3.185	0.519	10.4	56.41
9	1.071	0.132	2.099	3.302	0.538	10.1	58.08
10	1.084	0.134	2.124	3.342	0.544	10.0	58.66

LIVE LOAD DEFLECTIONS (INCHES)

TRUCK	LANE	MILITARY	RAILROAD	SIDEWALK	L/1000
0.0	0.0	0.0	0.0	0.913	1.608

SIMPLE SPAN

STATE HIGHWAY DEPARTMENT OF GEORGIA
BRIDGE DIVISION

10-15-70

IDENTIFICATION

"CONT" TO CONTINUE REMARKS

	PROG.	PROB. NO.	PROJECT NO.	COUNTY	DATE	DESIGNER	ETC.
*	B04	CG-5	ANALYZE A GIVEN COMPOSITE GIRDER				
*							

SPAN DATA

	CODE		LIVE LOAD				SPAN LENGTH	DFM	DFV	DFD	NPL	WDLNC	WDLC	WSWK	EBEAM X 10^6	WT.BM.	ALLOW. STRESS STEEL	ALLOW. STRESS CONC.	WT.BM. MAT'L.	TYPE STEEL
	TYPE	D/A	CLASS	T	L	M														
1	CG	1	RR80				78.000	2.000	.477	20.00	4	.980	.445		29.00		23.00	20.00	49.0	572

1 = ANALYSIS (D/A) 1 = SKIP (T, L, M)
BLANK = DESIGN (D/A)

CONCENTRATED LOADS (LIMIT 40)

		X1	P1	X2	P2	X3	P3	X4	P4
2	1	.000	1.680	22.000	.600	44.000	.600	68.000	1.680
2	2								
2	3								
2	4								

CODE: TYPE
RB – ROLLED BEAM
RP – ROLLED W/PLATE
CB – COMPOSITE ROLLED
PG – PLATE GIRDER
CG – COMPOSITE GIRDER
TB – CONCRETE BEAM

STEEL BEAM DATA

	ROLLED BEAM				NON-STANDARD BEAM			PLATE GIRDER							
	BEAM 1	BEAM 2	P	NP	SECTION PROPERTIES			WEB		TOP FLANGE		BOTTOM FLANGE		CONW	CONT
	DEPTH & WEIGHT	DEPTH & WEIGHT			I_o IN.^{4}	YTOP	YBOT.	DEPTH	THICK.	WIDTH	THICK.	WIDTH	THICK.		
3	WF	WF						72.00	1.0						

1 = CONSTANT THICKNESS (T)
WIDTH (W)

	COMPOSITE SLAB			SHEAR CONN.		N	BOTTOM COVER PLATE				TOP COVER PLATE			
	EFFECTIVE WIDTH	THICK.	COPING	ΣZ_r	SU	ES/EC	X-BEG.	THICK.	WIDTH	LENGTH	X-BEG.	THICK.	WIDTH	LENGTH
4	84.000	7.000	.375	1.789	28.65	6	0.00	4.0	18.00	78.000	0.00	2.0	18.00	78.000

P = 1 DESIGN WITH ℄'s
N.P. = 1 DESIGN WITHOUT ℄'s

CONCRETE BEAM DATA (T, RECT., FLAT SLAB)

"N"		NO.	BEAM (WEB) IN.				'T' SLAB		COMPRESSION ST.				ROW ONE				ROW TWO			
TEN.	COM.	ROWS	WIDTH	ΔW	DEPTH	ΔD	WIDTH	THICK.	NO.	SIZE	Δ	DIST.	NO.	SIZE	Δ	DIST.	NO.	SIZE	Δ	DIST.
3																				

ROW THREE				ROW FOUR				ROW FIVE				ROW SIX				ROW SEVEN				ROW EIGHT				ROW NINE			
NO.	SIZE	Δ	DIST.	NO.	SIZE	Δ	DIST.	NO.	SIZE	Δ	DIST.	NO.	SIZE	Δ	DIST.	NO.	SIZE	Δ	DIST.	NO.	SIZE	Δ	DIST.	NO.	SIZE	Δ	DIST.
4																											

LENGTH – FT.
WDLNC – K/FT.
WDLC – K/FT.
WT. BM. – K/FT.

COPING – IN.
AL. STRESS – K.S.I.
WT. BM. MAT'L. – PCF
WSWK – K/FT.
X_n – FT.

DIMENSIONS
P_n – KIPS.
TYPE STEEL – 572, 588
DEPTH – IN.
THICK. – IN.

WEIGHT – LBS.
YTOP – IN.
ΣZ_r – K/ROW
X-BEG. – FT.
WIDTH – IN.

YBOT. – IN.
SU – K/EA.
SIZE – BAR SIZE (#4, #10, etc.)
Δ – INCREMENT (NO. OF BARS)
DIST. – IN.

SIMPLE SPAN INPUT DATA PROBLEM NUMBER CG-5

03/15/71 ANALYZE A GIVEN COMPOSITE GIRDER

SPAN DATA

BEAM	D/A	L.L.C.	T L M	LENGTH	D.F.M.	D.F.V.	D.F.D.	NPL
CG	1	RR80	0 0 0	78.000	2.000	0.477	2.000	4

WDLNC	WDLC	SWLL	E	W BM	FS	FC	WG	TYPE STEEL
C.980	0.445	C.0	29.00	0.0	23.00	2.000	0.490	572

CONCENTRATED LOADS

X1	P1	X2	P2	X3	P3	X4	P4
0.0	1.680	22.000	0.600	44.000	0.600	68.000	1.680

BEAM DATA

ROLLED		SECTION PROPERTIES			PLATE GIRDER WEB		TOP FLANGE		BOTTOM FLANGE	
BEAM	P NP	I	Y TOP	Y BOT	D	T	W	T	W	T
OWF	0 0 0	0.0	0.0	0.0	72.00	1.0000	0.0	0.0	0.0	0.0
OWF	0									

COMPOSITE SLAB

WIDTH	THICKNESS	COPING	SHEAR CAPACITY	ULTIMATE STRENGTH	N=ES/EC
84.000	7.000	0.375	17.89 K/ROW	28.65 KIPS EACH	6

BOTTOM COVER PLATE				TOP COVER PLATE				CONSTANT	
X-BEGIN	THICKNESS	WIDTH	LENGTH	X-BEGIN	THICKNESS	WIDTH	LENGTH	W	T
0.0	4.0000	18.00	78.00	0.0	2.0000	18.00	78.00	0	0

SIMPLE SPAN OUTPUT DATA PROBLEM NUMBER CG-5

PLATE GIRDER PROPERTIES

WEB		TOP FLANGE		BOTTOM FLANGE		WEB AND FLANGES PROPERTIES			
DEPTH	THICK	WIDTH	THICK	WIDTH	THICK	AREA	Y-TOP	Y-BOTTOM	I
72.00	1.0000	0.0	0.0	0.0	0.0	72.000	36.000	36.000	31104.0

WEB AND COVER PLATES

BOTTOM COVER PLATE				TOP COVER PLATE			
X-BEGIN	THICKNESS	WIDTH	LENGTH	X-BEGIN	THICKNESS	WIDTH	LENGTH
0.0	4.0000	18.00	78.00	0.0	2.0000	18.00	78.00

WEB WITH COVER PLATES PROPERTIES

AREA	Y-TOP	Y-BOTTOM	I
180.000	45.800	32.200	173512.8

COMPOSITE SECTION PROPERTIES

	WEB AND FLANGES					WEB AND PLATES				
N	YTC	YTS	YBS	I	Q SLAB	YTC	YTS	YBS	I	Q SLAB
6	35.66	28.29	49.71	330490.3	3152.0	35.66	28.29	49.71	330490.3	3152.0
18	45.54	38.17	39.83	241872.6		45.54	38.17	39.83	241872.6	

NUMBER OF SHEAR CONNECTORS NEEDED TO PROVIDE FOR ULTIMATE STRENGTH 206

NUMBER OF LONGITUDINAL STIFFENERS NEEDED 0

TRANSVERSE STIFFENERS NOT REQUIRED

SIMPLE SPAN OUTPUT DATA PROBLEM NUMBER CG-5

MOMENTS (K-FT.) AT SPAN 1/20 POINTS

SP	GIRDER	P-LOAD	NCN-C.	TOT.NC	COMP.	SIDEWK	LIVE LOAD	RR-I
1	88.5	3.5	141.6	233.6	64.3	0.0	1725.2 R	822.9
2	167.7	7.1	268.3	443.1	121.8	0.0	3148.2 R	1501.7
3	237.6	10.6	380.1	628.3	172.6	0.0	4402.7 R	2100.1
4	298.1	14.2	477.0	789.3	216.6	0.0	5451.8 R	2600.5
5	349.4	17.7	559.0	926.0	253.8	0.0	6278.0 R	2994.6
6	391.3	20.4	626.0	1037.7	284.3	0.0	6959.0 R	3319.5
7	423.9	21.6	678.2	1123.7	308.0	0.0	7512.7 R	3583.6
8	447.2	22.8	715.5	1185.5	324.9	0.0	7944.3 R	3789.4
9	461.1	24.0	737.8	1223.0	335.0	0.0	8197.5 R	3910.2
10	465.8	25.2	745.3	1236.3	338.4	0.0	8258.0 R	3939.1

STRESS (PSI) AT SPAN 1/20 POINTS

	MINIMUM STRESS		MAXIMUM STRESS			ALLOWABLE	R FACTOR	
SP	TOP-S	BOT-S	TOP-C	TOP-S	BOT-S	FS	TOP-S	BOT-S
1	861	-647	558	3479	-5246	23000	0.248	0.123
2	1634	-1227	1018	6410	-9620	23000	0.255	0.128
3	2316	-1740	1425	8996	-13477	23000	0.258	0.129
4	2910	-2185	1765	11181	-16720	23000	0.260	0.131
5	3413	-2563	2033	12938	-19300	23000	0.264	0.133
6	3825	-2872	2254	14382	-21425	23000	0.266	0.134
7	4142	-3110	2433	15540	-23139	23000	0.267	0.134
8	4370	-3281	2573	16422	-24461	23000	0.266	0.134
9	4508	-3385	2655	16944	-25239	23000	0.266	0.134
10	4556	-3421	2674	17085	-25437	23000	0.267	0.135

SHEARS (KIPS) AT SPAN 1/20 POINTS CG-5

SP	GIRDER	P-LOAD	NON-C.	TOT.NC	COMP.	SIDEWK	LIVE LOAD	RR-I
0	23.9	2.6	38.2	64.7	17.4	0.0	486.8 R	232.2
1	21.5	0.9	34.4	56.8	15.6	0.0	442.4 R	211.0
2	19.1	0.9	30.6	50.6	13.9	0.0	398.8 R	190.2
3	16.7	0.9	26.8	44.4	12.1	0.0	356.5 R	170.0
4	14.3	0.9	22.9	38.2	10.4	0.0	317.9 R	151.7
5	11.9	0.9	19.1	32.0	8.7	0.0	281.9 R	134.5
6	9.6	0.3	15.3	25.2	6.9	0.0	249.0 R	118.8
7	7.2	0.3	11.5	18.9	5.2	0.0	218.6 R	104.3
8	4.8	0.3	7.6	12.7	3.5	0.0	188.8 R	90.1
9	2.4	0.3	3.8	6.5	1.7	0.0	160.4 R	76.5
10	0.0	0.3	0.0	0.3	0.0	0.0	132.7 R	63.3

	DEAD LOAD DEFLECTIONS (INCHES)					SHEAR	
SP	GIRDER	P-LOAD	NON-C.	TOT.NC	COMP.	RANGE(KIPS)	CON.SPAC(IN)
0	0.0	0.0	0.0	0.0	0.0	486.8	3.85
1	0.016	0.001	0.026	0.043	0.008	442.4	4.24
2	0.032	0.002	0.051	0.084	0.017	398.8	4.70
3	0.047	0.002	0.075	0.124	0.024	356.5	5.26
4	0.060	0.003	0.096	0.160	0.031	317.9	5.90
5	0.072	0.004	0.116	0.192	0.038	281.9	6.65
6	0.082	0.004	0.132	0.219	0.043	249.0	7.53
7	0.091	0.005	0.145	0.240	0.047	218.6	8.58
8	0.097	0.005	0.154	0.256	0.050	188.8	9.94
9	0.100	0.006	0.160	0.266	0.052	160.4	11.69
10	0.101	0.006	0.162	0.269	0.053	132.7	14.14

LIVE LOAD DEFLECTIONS (INCHES)

TRUCK	LANE	MILITARY	RAILROAD	SIDEWALK	L/ 640
0.0	0.0	0.0	1.394	0.0	1.462

(BLANK PAGE)

VII. CONCRETE BEAMS (TB)

A concrete beam is any concrete T beam, rectangular concrete beam, or concrete flat slab, that is constructed of concrete and reinforcing steel. Refer to the input data form in the following discussion of the input data. Also refer to the drawing on page 7 - 17.

INPUT DATA

A. IDENTIFICATION (* in c.c. 1).

The IDENTIFICATION lines are used to supply any pertinent information about the bridge that the engineer wishes to head the output listing. The project number, county, date, and the designer's name or initials should always be given. Card columns 2-4 of the first line are reserved for the program number.

Card columns 5-8 of the first line are reserved for the problem number. This space is always left blank by the Engineer since the problem number is assigned from the log book of the Bridge Division computer problems. The problem number is associated with any error messages and appears on the output listing.

Any number of IDENTIFICATION lines may be used to enter remarks, etc. Whenever more than one line (card) is used, the code "CONT" must be entered in card columns 65-68 of all lines (cards), except the last line, to indicate to the program that another IDENTIFICATION card will follow. If only one line (card) of IDENTIFICATION is used, "CONT" is not required.

B. SPAN DATA (1 in c.c. 1).

The SPAN DATA card gives information relating to the span, generally without regard to the type of beam under consideration. The digit one (1) in card column one is used for identification and is of no significance to the Engineer.

1. CODE (c.c. 2-4) Form: TBX

   a. TYPE (c.c. 2,3) Form: TB

      Enter the TYPE of beam in card columns 2, 3. "TB" defines a concrete T beam, rectangular concrete beam, or a concrete flat slab. Also only resisting moments for a given section can be obtained by leaving the span length zero (0).

   b. D/A (c.c. 4) Form: x (blank or 1).

      The digit one (1) indicates that a given section is to be analyzed, and a blank (or zero) indicates that the beam is to be designed (determined). Any other character is illegal.

2. LIVE LOAD (c.c. 5-11). This input data defines the class of live load and the various loads that are to be omitted.

   a. CLASS (c.c. 5-8)

      The LIVE LOAD CLASS is entered in card columns 5-8, i.e., HS20, H 15, RR80, etc. Following are the live loads considered by the program.

HS20*	(AASHO designation HS20-44)
HS15	(AASHO designation HS15-44)
H 20	(AASHO designation H20-44)
H 15	(AASHO designation H15-44)

(*These numbers can be increased or decreased by any amount to check the overstress provisions of the AASHO Specifications.)

The program uses 80% of the input value for the largest wheel load. Uniform lane load and concentrated lane loads are proportioned accordingly. Moments are computed with the wheel loads adjusted by impact and the distribution factor for moments (DFM).

For the end reaction, the wheel at the support is adjusted by the impact factor and the distribution factor for shear (DFV). Intermediate shear values are computed with the wheel loads adjusted by the impact factor for the loaded span and the distribution factor for moments. Deflections are a function of the wheel loads adjusted by the impact factor and the distribution factor for deflections (DFD).

Railroad live loads:

RR80 (AREA Cooper E 80 load).
RR72 (AREA Cooper E 72 load).
RR** (AREA Cooper E ** load).

The program computes the moments, shears, and approximates the deflection for one rail adjusted by impact and distribution factors using one-half of the input value (80,72,etc.) as the largest wheel load.

b. T (c.c. 9) Form: X (blank or 1).

The truck live load can be eliminated from consideration by entering the digit one (1) in card column 9 when using a standard highway loading. Leave blank if truck loading is to be considered.

c. L (c.c. 10) Form: X (blank or 1).

The lane live load can be eliminated from consideration by entering the digit one (1) in card column 10 when using a standard highway loading. Leave blank if lane loading is to be considered.

d. M (c.c. 11) Form: X (blank or 1).

The military live load can be eliminated from consideration by entering the digit one (1) in card column 11 when using a standard highway loading. Leave blank if military loading is to be considered.

Sidewalk live load only can be achieved by placing 111 in T,L,M (c.c. 9, 10, 11) with a standard highway load. This eliminates the truck, lane, and military from consideration leaving the sidewalk load as the only live load when computing moments, stresses, shears and deflections.

The omission of truck, lane, and military live load has no meaning when railroad live load is designated.

3. LENGTH (c.c. 12-17) Form: XXX.XXX feet.

LENGTH is the design span length in feet from center line of bearing to center line of bearing. When only resisting moments are desired, leave the LENGTH blank or zero (0).

4. DFM (c.c. 18-21) Form: X.XXX ratio.

DFM, the distribution factor for moments, is the proportion of one row of wheels for highway and railroad loadings acting on the beam for moment and intermediate shear. This factor cannot be zero.

5. DFV (c.c. 22-25) Form: X.XXX ratio.

DFV, the distribution factor for end shear, is the proportion of one wheel on the beam at the end support for highway live load. When railroad live load is indicated, DFV is the amount the loads are increased for impact.

6. DFD (c.c. 26-29) Form: X.XXX ratio.

DFD, the distribution factor for deflections, is the proportion of one row of wheels for highway and railroad live loadings acting on the beam for calculating live load deflections. DFD is completely independent of DFM or DFV.

7. NPL (c.c. 30,31) Form: XX (1-40).

NPL is the number of concentrated loads in the span.

A maximum of forty is available.

8. WDLnc (c.c. 32-35) Form: X.XXX kips per foot.

WDLnc is the weight of the uniform dead load (slab, coping, curb, handrail, utilities, etc.) in kips per foot. The weight of the beam should not be included. However, weight of the "T" slab that is not effective is included here.

9. WDLc (c.c. 36-39) Form: X.XXX kips per foot.

WDLc is used to separate dead loads when necessary, i.e., the weight of future paving or future construction. The value placed in WDLc is used to compute total stresses, but the moments, shears, and deflections will not be added to the total moments, shears and deflections in the output data.

10. WSWK (c.c. 40-43) Form: X.XXX kips per foot.

WSWK is the uniform sidewalk live load in kips per foot. The deflection resulting from this load is added to the highway (H, HS) or railroad (RR) live load deflection when checking to see if the allowable live load deflection (L/1000) is exceeded. It is assumed that the maximum sidewalk deflection and the maximum highway or railroad deflection could be coincidental.

11. E BEAM x 10^6 (c.c. 44-47) Form: XX.XX mpsi

This is the Modulus of Elasticity of the beam material in million pounds per square inch, and is used in computing deflections. If a value of E equal to zero (0) is entered or this data field is left blank, the program will by-pass all computations for deflections.

12. WT.BM. (c.c. 48-51) Form: X.XXX kips per foot.

This is the uniform weight of the non-standard beam specified in "SECTION PROPERTIES", and is not used with a concrete beam.

13. ALLOWABLE STRESS (c.c. 52-59).

a. STEEL (c.c. 52-55) Form: XX.XX ksi.

STEEL is the allowable stress in ksi in the steel to determine which grade reinforcing steel to use. If zero or blank, 20.000 ksi is used by the program.

b. CONC (c.c. 56-59) Form: X.XXX ksi.

This is the allowable stress in ksi in the concrete. If zero or blank, 1.200 ksi is used by the program.

14. WT.BM.MAT'L (c.c. 60-62) Form: XXX pounds per cu.ft.

This is the weight of the beam material in pounds per cubic foot. This data is required for the concrete beam if the weight of the concrete is not 150 pounds per cubic foot. If blank or zero, 150 pounds per cubic foot is used by the program.

15. TYPE STEEL (c.c. 63-65) Form: XXX (36, 441, etc.)

The TYPE STEEL applies to steel beams only and has no use with the concrete beam.

C. CONCENTRATED LOADS (w in c.c. 1)

Card columns one and two are used to keep the cards in sequence and contain 21, 22, 23, etc. to 30. The input data form shows four cards (the program has provisions for ten). When necessary, write between the lines, or attach extra forms to provide space for the required CONCENTRATED LOADS.

1. Xn (c.c. 3-8, 15-20, 27-32, 39-44) Form: XXX.XXX feet.

Xn is the distance in feet from the left support to the concentrated load (diaphragm, handrail post, utility pole, sign, etc.) Pn. The maximum number of loads is forty. The distance may, or may not be of increasing magnitude from the left support.

2. Pn (c.c. 9-14, 21-26, 33-38, 45-50) Form: XXX.XXX kips.

Pn is the concentrated load in kips.

D. CONCRETE BEAM DATA (3 in c.c. 1)

1. "N" (c.c. 2-5)

a. TEN. (c.c. 2,3) Form: XX ratio.

TEN. is the ratio of the modulus of elasticity of tensile steel to that of concrete. If TEN. is zero or blank, a value of 10 is used by the program.

b. COM. (c.c. 4, 5) Form: XX ratio.

COM. is the ratio of the modulus of elasticity of compressive steel to that of concrete. If COM. is zero or blank, a value of 10 is used by the program.

2. NO. ROWS (c.c. 6,7) Form: XX (1 through 9)

NO. ROWS is the number of horizontal rows of tensile steel. There must be one or more rows of tensile steel.

3. BEAM (WEB) (c.c. 8-25)

BEAM (WEB) contains the dimensions for the stem of the "T", or the width and depth of a rectangular beam, or the dimensions of the section of a concrete flat slab being considered. The program computes the beam weight from these dimensions.

a. WIDTH (c.c. 8-12) Form: XX.XXX inches.

WIDTH is the width in inches of the BEAM described above. If zero or blank, a value of 18 inches is used by the program.

b. ΔW (c.c. 13-16) Form: X.XXX inches.

ΔW is the increment the Engineer chooses to increase the width, if necessary, of the BEAM (WEB) in a design problem. A value of zero indicates the WIDTH is not to be increased.

c. DEPTH (c.c. 17-21) Form: XX.XXX inches.

DEPTH is the depth in inches of the BEAM (WEB). If zero or blank, a value of 24.0 inches is used for the first trial design.

d. ΔD (c.c. 22-25) Form: X.XXX inches.

ΔD is the increment the Engineer chooses to increase the depth,

if necessary, of the BEAM (WEB) in a design problem. A value of zero indicates the DEPTH is not to be increased.

4. 'T' SLAB (c.c. 26-35)

'T' SLAB contains the dimensions for the flange of the 'T' beam. The program also computes the beam weight from these dimensions.

a. WIDTH (c.c. 26-30) Form: XX.XXX inches.

WIDTH is the effective flange width of the 'T' beam. The weight of any flange width that is not effective must be included in WDLnc.

b. THICK. (c.c. 31-35) Form: XX.XXX inches.

THICK is the thickness or depth of the flange portion of the 'T' beam in inches.

5. COMPRESSION ST. (c.c. 36-44)

These dimensions describe the size, number, and location of the compression steel for analysis (D/A=1) or design (D/A=0).

a. NO. (c.c. 36, 37) Form: XX number.

NO. is the number of bars of compression steel to be used in the problem.

b. SIZE (c.c. 3, 39) Form: XX (2,3 ---18)

SIZE is the size of the compression steel to be used in the problem.

c. Δ (c.c. 40) Form: X

Δ at the present time, has no function in the program.

d. DIST. (c.c. 41-44) Form: XX.XX inches.

DIST. is the distance in inches from the top of the slab

to the centroid of the compression steel.

6. ROW ONE - - ROW NINE

These rows contain the descriptions of the tensile steel. There must be at least one row of steel. When used to design beams, the rows should contain the maximum number of bars to be used in that row.

a. NO. (c.c. 45, 46) Form: XX number.

In a design problem, NO. is the maximum number of bars allowed in the row. However, in an analysis problem, NO. is the actual number of bars in the row.

b. SIZE (c.c. 47-48) Form: XX (2, 3....18)

SIZE is the size of the bar to be used in this row.

c. Δ (c.c. 49) Form: X (number 1-9)

Δ is the increment to be used to increase the number of bars in this row from 0 to NO. for a design (D/A=0) problem only. Δ has no meaning for an analysis (D/A=1) problem.

d. DIST. (c.c. 50-53) Form: XX.XX inches.

DIST. is the distance in inches from the bottom of the beam to the centroid of this row of steel.

CONCRETE BEAM

OUTPUT DATA

A. The first page of the output listing contains the input data and should be checked to verify that the proper quantities were punched in the input data cards.

B. The second page of the output listing tabulates the MOMENTS (K-FT.), KD, JD, RESISTING MOMENTS, LENGTH, and #4 STIRRUP SPACING.

1. MOMENTS (K-FT.) AT SPAN 1/20 POINTS.

   For the left half of the span.

   a. SP lists the span points in 20ths.

   b. GIRDER lists the moments in kip-feet due to the weight of the beam.

   c. P-LOAD lists the moments in kip-feet due to the concentrated loads only.

   d. NON-C lists the moments in kip-feet due to the uniform dead load (WDLnc) only.

   e. TOT.NC lists the sum of the GIRDER, P-LOAD, and NON-C moments in kip-feet.

   f. COMP. lists the moments in kip-feet due to the uniform dead load input (WDLc) only.

   g. SIDEWK lists the moments in kip-feet due to the sidewalk live load.

   h. LIVE LOAD lists the moments in kip-feet due to the live load. Moments due to highway live loads include impact while railroad moments do not include impact. The letter code after the moment indicates the type of live load that governs as follows:

1) T designates the moment is due to the truck live load.
2) L designates the moment is due to the lane live load.
3) M designates the moment is due to the military live load.
4) R designates the moment is due to the railroad live load.

i. RR-I lists the moment in kip-feet due to railroad impact and is considered for railroad live load only.

When the problem is a design (D/A=0) problem, the WIDTH and DEPTH are printed.

WIDTH is the width of the final design web in inches. DEPTH is the depth of the WEB in inches of the final design.

2. RESISTING MOMENTS heads the tabulation of the various properties of each row of steel.

a. ROW

ROW corresponds to ROW ONE through ROW NINE on the input form. The rows of steel are cumulative, i. e., Row 2 contains rows one, two, and any compressive steel.

b. SIZE

SIZE is the size listed on the input form.

c. KD

KD is the distance in inches from the top of the slab to the neutral axis.

d. JD

JD is the distance in inches from the centroid of the concrete force to the centroid of the steel force.

e. RESISTING MOMENTS

RESISTING MOMENTS in kip feet are computed with the allowable stress in the concrete (FC) and the allowable stress in the steel (FS). The value of n (N) for tensile steel is also listed.

f. LENGTH

LENGTH is the length in feet of the particular row of steel. It is computed by intersecting the total moment curve with the minimum resisting moment and adding the bond requirements. Bond requirements are the maximum of the following:

15 diameters

1/20 of span length

Allowable bond stress = $\frac{4.8}{D}(f'c)^{\frac{1}{2}}$ with 500 psi max.

where D = bar diameter.

g. #4 STRRUP SPACING

This column contains the required spacing of a #4 bar at the beginning of each row of steel. The second row may contain a more stringent requirement than the first row. This occurs because the end of the second row may be so close to the end of the beam that the end shear will be used to compute the spacing and the JD value is smaller.

C. The third page of the output listing tabulates the SHEARS (KIPS), the DEAD LOAD DEFLECTIONS (INCHES), the SHEAR RANGE (KIPS), the SHEAR CON. SPAC (IN), and the LIVE LOAD DEFLECTIONS (INCHES).

1. SHEARS (KIPS) AT SPAN 1/20 POINTS.

a. SP lists the span point in 20ths.

b. GIRDER lists the shears in kips due to the weight of the beam only.

c. P-LOAD lists the shears in kips due to the concentrated loads only.

d. NON-C lists the shears in kips due to the uniform dead load only (WDLnc).

e. TOT.NC lists the total of GIRDER, P-LOAD, and NON-C.

f. COMP. lists the shears in kips due to the uniform dead load given as WDLc.

g. SIDEWK lists the maximum positive shears in kips due to the sidewalk live load.

h. LIVE LOAD lists the maximum shears due to the standard highway or railroad live load. Shears due to highway live loads include impact while railroad shears do not include impact. The letter code after the shear value indicates the type of live load which controlled as follows:

1) T designates the shear is due to the truck live load.
2) L designates the shear is due to the lane live load.
3) M designates the shear is due to the military live load.
4) R designates the shear is due to the railroad live load.

i. RR-I lists the shears due to railroad impact and is considered with railroad live load only.

2. DEAD LOAD DEFLECTIONS (INCHES)

DEAD LOAD DEFLECTIONS are computed with N=30 as required by AASHO specifications (1969).

a. SP lists the span point in 20ths.

b. GIRDER lists the deflection in inches due to the beam.

c. P-LOAD lists the deflection in inches due to the concentrated loads only.

d. NON-C lists the deflection in inches due to the uniform dead load (WDLnc) only.

e. TOT.NC lists the total of GIRDER, P-LOAD, and NON-C.

f. COMP. lists the deflection due to the uniform dead load input in WDLc.

3. SHEAR

a. RANGE (KIPS) lists the difference in the minimum and maximum shear envelopes (excluding dead loads). The loading condition creating the maximum positive shear is listed (T,L,M,R) under LIVE LOAD and SIDEWK. The loading condition creating the maximum negative shear is not identified. Therefore, the RANGE (KIPS) may be sidewalk combined with truck and lane, lane and military, or truck and military; depending on which loading condition results in the maximum negative shear and whether it is a different loading condition than results in the maximum positive shear.

b. CON.SPA. (IN) lists the shear connector spacing for composite construction. For a concrete beam, this is assigned a zero (0) value.

4. LIVE LOAD DEFLECTIONS (INCHES)

These deflections are computed with N=8 as required by AASHO specifications (1969).

The LIVE LOAD deflections take into consideration impact (50/(L + 125) or 30% maximum for highway live loads and input (DFV) for railroad live loading, and the distribution factor (DFD) for deflections.

a. TRUCK lists the maximum deflection in inches at the center line of the span due to the specified (H or HS) truck loading.

b. LANE lists the maximum deflection in inches at the center line of the span due to the specified lane loading.

c. MILITARY lists the maximum deflection in inches at the center line of the span due to the military loading.

d. RAILROAD lists the deflection in inches computed by treating the maximum distributed moment, plus impact, due to the specified railroad live load at the center line of the span as the middle ordinate of a parabolic moment diagram. The beam is loaded with the resulting M/EI diagram and the center line deflection is computed by Simpson's rule for numerical integration. The results compare favorably (conservative by about 5%) with the deflection computed by using the actual M/EI diagram for the maximum moment at the centerline of a one hundred foot span.

e. SIDEWALK lists the deflection in inches at the center line of the span due to the sidewalk live load.

f. L/800 lists the allowable deflection in inches for highway live loads as the length of the span divided by eight hundred.
L/640 lists the allowable deflection in inches for railroad live loads as the length of the span divided by six hundred forty.
L/1000 lists the allowable deflection in inches when the sidewalk is loaded, as the length of the span divided by one thousand.

CONCRETE BEAM

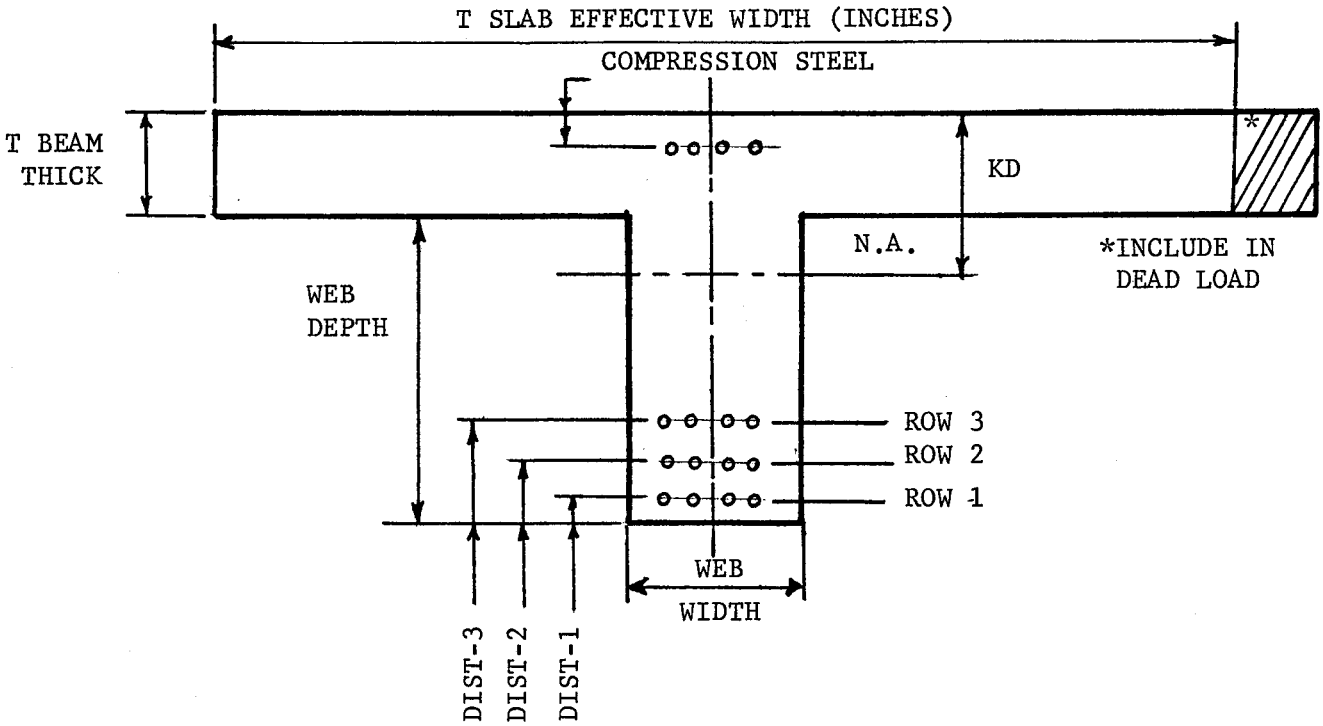

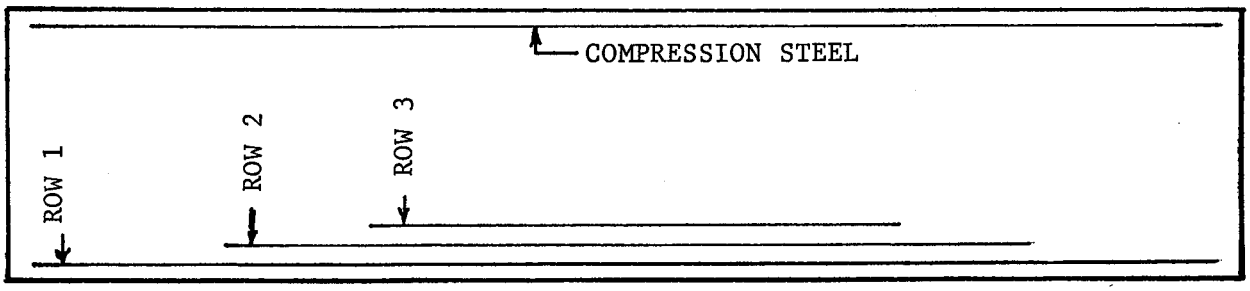

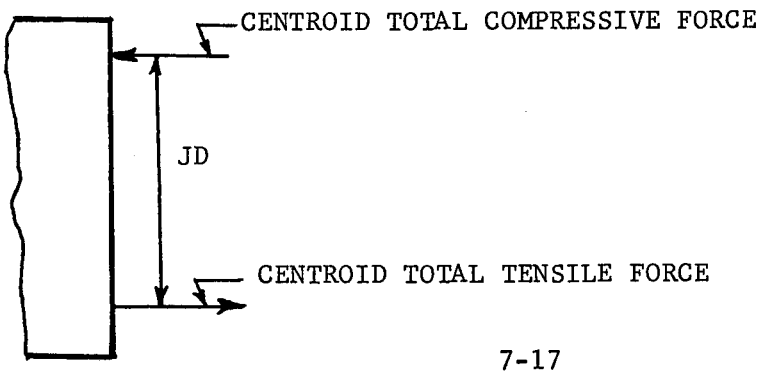

CONCRETE BEAM

EXAMPLE PROBLEMS

The following are some example problems which illustrate some uses of the program.

1. Analysis of a given "T" Beam. (See example TB-1 on Page 7-19.)
2. Design a "T" Beam with compressive steel. (See example TB-2 on page 7-23.)
3. Analyze a given "T" Beam with compressive steel. (See example TB-3 on page 7-27.)
4. Design a "T" Beam giving "T" dimension and steel placement dimensions only (the program starts with an 18"x24" stem). (See example TB-4 on page 7-31.)
5. Design a rectangular beam. (See example TB-5 on page 7-35.)
6. Analyze a given placement of steel by getting resisting moments. (Length=0.0) (See example TB-6 on page 7-39.)

The following live loading conditions are explored.

1. H20 excluding military, see example TB-1 on page 7-19.
2. HS20, see example TB-2 on page 7-23.
3. HS15 with sidewalk, see example TB-3 on page 7-27.
4. RR72 (Cooper E-70), see example TB-4 on page 7-31.
5. HS00 excluding military, (sidewalk live load only), see example TB-5 on page 7-35.

SIMPLE SPAN

IDENTIFICATION

"CONT" TO CONTINUE REMARKS

	PROG.	PROB. NO.	PROJECT NO.	COUNTY	DATE	DESIGNER	ETC.
*	B04	TB-1	T BEAM ANALYSIS				
*							

SPAN DATA

CODE TYPE	D/A	LIVE LOAD CLASS	T	L	M	SPAN LENGTH	DFM	DFV	DFD	NPL	WDLNC	WDLC	WSWK	EBEAM X 10^6	WT.BM.	ALLOW. STRESS STEEL	ALLOW. STRESS CONC.	WT.BM. MAT'L.	TYPE STEEL
TB	1	H 20		1		50.000	1.273	1.429	800	1	.160	.105	.005	3.63		20.00	1.200	150	

1 = ANALYSIS (D/A) 1 = SKIP (T, L, M)
BLANK = DESIGN (D/A)

CONCENTRATED LOADS (LIMIT 40)

	X1	P1	X2	P2	X3	P3	X4	P4
2 1	25.000	1.400						
2 2								
2 3								
2 4								

CODE: TYPE
RB – ROLLED BEAM
RP – ROLLED W/PLATE
CB – COMPOSITE ROLLED
PG – PLATE GIRDER
CG – COMPOSITE GIRDER
TB – CONCRETE BEAM

STEEL BEAM DATA

ROLLED BEAM: BEAM 1 DEPTH & WEIGHT	BEAM 2 DEPTH & WEIGHT	P	NP	NON-STANDARD BEAM: SECTION PROPERTIES I_o IN.^4	YTOP	YBOT.	PLATE GIRDER: WEB DEPTH	WEB THICK.	TOP FLANGE WIDTH	TOP FLANGE THICK.	BOTTOM FLANGE WIDTH	BOTTOM FLANGE THICK.	CONW	CONT
3 W.F	W.F													

1 = CONSTANT THICKNESS (T)
WIDTH (W)

COMPOSITE SLAB: EFFECTIVE WIDTH	THICK.	COPING	SHEAR CONN. ΣZr	SU	N ES/EC	BOTTOM COVER PLATE: X-BEG.	THICK.	WIDTH	LENGTH	TOP COVER PLATE: X-BEG.	THICK.	WIDTH	LENGTH
4													

P = 1 DESIGN WITH PL's
N.P. = 1 DESIGN WITHOUT PL's

CONCRETE BEAM DATA (T, RECT., FLAT SLAB)

"N" TEN.	"N" COM.	NO. ROWS	BEAM (WEB) IN. WIDTH	ΔW	DEPTH	ΔD	'T' SLAB WIDTH	THICK.	COMPRESSION ST. NO.	SIZE	Δ	DIST.	ROW ONE NO.	SIZE	Δ	DIST.	ROW TWO NO.	SIZE	Δ	DIST.
3 70	10	4	18.000		27.000		84.000	6.880					5	7.1		2.71	5	7.1		4.12

ROW THREE NO.	SIZE	Δ	DIST.	ROW FOUR NO.	SIZE	Δ	DIST.	ROW FIVE NO.	SIZE	Δ	DIST.	ROW SIX NO.	SIZE	Δ	DIST.	ROW SEVEN NO.	SIZE	Δ	DIST.	ROW EIGHT NO.	SIZE	Δ	DIST.	ROW NINE NO.	SIZE	Δ	DIST.
4 5	10		7.46	3	10		8.73																				

DIMENSIONS

LENGTH – FT.
WDLNC – K/FT.
WDLC – K/FT.
WT. BM. – K/FT.
COPING – IN.
AL. STRESS – K.S.I.
WT. BM. MAT'L. – PCF
WSWK – K/FT.
X_n – FT.
P_n – KIPS.
TYPE STEEL – 572, 588
DEPTH – IN.
THICK. – IN.
WEIGHT – LBS.
YTOP – IN.
ΣZr – K/ROW
X-BEG. – FT.
WIDTH – IN.
YBOT. – IN.
SU – K/EA.
SIZE – BAR SIZE (#4, #10, etc.)
Δ – INCREMENT (NO. OF BARS)
DIST – IN.

SIMPLE SPAN INPUT DATA PROBLEM NUMBER TB-1

03/19/71 T BEAM ANALYSIS

SPAN DATA

BEAM	D/A	L.L.C.	T L M	LENGTH	D.F.M.	D.F.V.	D.F.D.	NPL
TB	1	H 20	0 0 1	50.000	1.273	1.429	0.800	1

WDLNC	WDLC	SWLL	E	W BM	FS	FC	WG	TYPE STEEL
0.160	0.105	0.005	3.63	0.0	20.00	1.200	0.150	0

CONCENTRATED LOADS

X1	P1	X2	P2	X3	P3	X4	P4
25.000	1.400	0.0	0.0	0.0	0.0	0.0	0.0

N CONCRETE BEAM DATA T-SLAB

TENSILE	COMPRES	NO. ROWS	WIDTH	DELTA-W	DEPTH	DELTA-D	WIDTH	THICK
10	10	4	18.000	0.0	27.000	0.0	84.000	6.880

COMPRESSION STEEL				ROW NUMBER ONE				ROW NUMBER TWO			
NO.	SIZE	DELTA	DIST.	NO.	SIZE	DELTA	DIST.	NO.	SIZE	DELTA	DIST.
0	0	0	0.0	5	11	0	2.71	5	11	0	4.12

ROW NUMBER THREE				ROW NUMBER FOUR				ROW NUMBER FIVE			
NO.	SIZE	DELTA	DIST.	NO.	SIZE	DELTA	DIST.	NO.	SIZE	DELTA	DIST.
5	10	0	7.46	3	10	0	8.73	0	0	0	0.0

SIMPLE SPAN OUTPUT DATA PROBLEM NUMBER TB-1

MOMENTS (K-FT.) AT SPAN 1/20 POINTS

SP	GIRDER	P-LOAD	NON-C.	TOT.NC	COMP.	SIDEWK	LIVE LOAD	RR-I
1	65.8	1.7	9.5	77.1	6.2	0.3	73.2 T	0.0
2	124.7	3.5	18.0	146.2	11.8	0.6	138.1 T	0.0
3	176.6	5.2	25.5	207.4	16.7	0.8	194.9 T	0.0
4	221.6	7.0	32.0	260.6	21.0	1.0	243.5 T	0.0
5	259.7	8.7	37.5	306.0	24.6	1.2	284.0 T	0.0
6	290.9	10.5	42.0	343.4	27.6	1.3	316.2 T	0.0
7	315.2	12.2	45.5	372.9	29.9	1.4	340.3 T	0.0
8	332.5	14.0	48.0	394.5	31.5	1.5	356.1 T	0.0
9	342.9	15.7	49.5	408.1	32.5	1.5	363.8 T	0.0
10	346.3	17.5	50.0	413.8	32.8	1.6	363.3 T	0.0

RESISTING MOMENTS

ROW	SIZE	NUMBER	KD	JD	FS= 20000 N= 10	FC= 1200 N= 10	LENGTH	#4 STIRRUP SPACING
1	11	5	6.74	28.88	376.1	818.5	50.000	9.11
2	11	5	9.12	27.68	696.7	1010.3	43.072	11.65
3	10	5	10.42	26.48	881.3	1053.6	24.392	16.94
4	10	3	11.04	25.88	974.1	1066.2	10.125	16.94

SHEARS (KIPS) AT SPAN 1/20 POINTS TB-1

SP	GIRDER	P-LOAD	NON-C.	TOT.NC	COMP.	SIDEWK	LIVE LOAD	RR-I
0	27.7	0.7	4.0	32.4	2.6	0.1	37.0 L	0.0
1	24.9	0.7	3.6	29.2	2.4	0.1	32.1 L	0.0
2	22.2	0.7	3.2	26.1	2.1	0.1	29.9 L	0.0
3	19.4	0.7	2.8	22.9	1.8	0.1	27.8 L	0.0
4	16.6	0.7	2.4	19.7	1.6	0.1	25.7 L	0.0
5	13.9	0.7	2.0	16.6	1.3	0.1	23.6 L	0.0
6	11.1	0.7	1.6	13.4	1.0	0.1	21.5 L	0.0
7	8.3	0.7	1.2	10.2	0.8	0.1	19.7 T	0.0
8	5.5	0.7	0.8	7.0	0.5	0.0	18.0 T	0.0
9	2.8	0.7	0.4	3.9	0.3	0.0	16.4 T	0.0
10	-0.0	0.7	-0.0	0.7	-0.0	0.0	14.7 T	0.0

	DEAD LOAD DEFLECTIONS (INCHES)					SHEAR	
SP	GIRDER	P-LOAD	NON-C.	TOT.NC	COMP.	RANGE(KIPS)	CON.SPAC(IN)
0	0.0	0.0	0.0	0.0	0.0	37.1	0.0
1	0.122	0.005	0.018	0.145	0.012	33.6	0.0
2	0.240	0.009	0.035	0.284	0.023	32.7	0.0
3	0.351	0.013	0.051	0.415	0.033	31.9	0.0
4	0.451	0.017	0.065	0.534	0.043	31.1	0.0
5	0.539	0.021	0.078	0.638	0.051	30.3	0.0
6	0.613	0.024	0.088	0.725	0.058	29.7	0.0
7	0.672	0.026	0.097	0.795	0.064	29.5	0.0
8	0.714	0.028	0.103	0.845	0.068	29.5	0.0
9	0.740	0.030	0.107	0.876	0.070	29.5	0.0
10	0.748	0.030	0.108	0.886	0.071	29.5	0.0

LIVE LOAD DEFLECTIONS (INCHES)

TRUCK	LANE	MILITARY	RAILROAD	SIDEWALK	L/1000
0.254	0.260	0.0	0.0	0.002	0.600

SIMPLE SPAN

IDENTIFICATION

"CONT" TO CONTINUE REMARKS

	PROG.	PROB. NO.	PROJECT NO.	COUNTY	DATE	DESIGNER	ETC.
*	B,0,4	TB-2	T BEAM DESIGN				
*							

SPAN DATA

	CODE TYPE	D/A	LIVE LOAD CLASS	T	L	M	SPAN LENGTH	DFM	DFV	DFD	NPL	WDLNC	WDLC	WSWK	EBEAM X 10^6	WT.BM.	ALLOW. STRESS STEEL	ALLOW. STRESS CONC.	WT.BM. MAT'L.	TYPE STEEL
1	TB		HS20				50.000	12.73	1.429	8.00	1	.160	.105		363		20.00	1200	150	

1 = ANALYSIS (D/A) 1 = SKIP (T, L, M)
BLANK = DESIGN (D/A)

CONCENTRATED LOADS (LIMIT 40)

		X1	P1	X2	P2	X3	P3	X4	P4
2	1	25.000	1.400						
2	2								
2	3								
2	4								

CODE: TYPE
RB – ROLLED BEAM
RP – ROLLED W/PLATE
CB – COMPOSITE ROLLED
PG – PLATE GIRDER
CG – COMPOSITE GIRDER
TB – CONCRETE BEAM

STEEL BEAM DATA

	ROLLED BEAM: BEAM 1 DEPTH & WEIGHT	BEAM 2 DEPTH & WEIGHT	P	NP	NON-STANDARD BEAM: SECTION PROPERTIES I_o IN.^4	Ytop	Ybot.	PLATE GIRDER: WEB DEPTH	WEB THICK.	TOP FLANGE WIDTH	TOP FLANGE THICK.	BOTTOM FLANGE WIDTH	BOTTOM FLANGE THICK.	CONW	CONT
3	W,F	W,F													

1 = CONSTANT THICKNESS (T) WIDTH (W)

	COMPOSITE SLAB: EFFECTIVE WIDTH	THICK.	COPING	SHEAR CONN. ΣZ_r	Su	N ES/EC	BOTTOM COVER PLATE: X-BEG.	THICK.	WIDTH	LENGTH	TOP COVER PLATE: X-BEG.	THICK.	WIDTH	LENGTH
4														

P = 1 DESIGN WITH ℄'s
N.P. = 1 DESIGN WITHOUT ℄'s

CONCRETE BEAM DATA (T, RECT., FLAT SLAB)

	"N" TEN.	COM.	NO. ROWS	BEAM (WEB) IN. WIDTH	ΔW	DEPTH	ΔD	'T' SLAB WIDTH	THICK.	COMPRESSION ST. NO.	SIZE	Δ	DIST.	ROW ONE NO.	SIZE	Δ	DIST.	ROW TWO NO.	SIZE	Δ	DIST.
3	1	0	5	18.00	1.00	27.00	1.00	84.00	6.80	2	1	0	2.71	5	1.71	1	2.71	5	1.71	1	4.12

	ROW THREE NO.	SIZE	Δ	DIST.	ROW FOUR NO.	SIZE	Δ	DIST.	ROW FIVE NO.	SIZE	Δ	DIST.	ROW SIX NO.	SIZE	Δ	DIST.	ROW SEVEN NO.	SIZE	Δ	DIST.	ROW EIGHT NO.	SIZE	Δ	DIST.	ROW NINE NO.	SIZE	Δ	DIST.
4	5	1	0	1.46	5	1	0	8.73	5	0	1	8.73																

DIMENSIONS

LENGTH – FT.
WDLNC – K/FT.
WDLC – K/FT.
WT. BM. – K/FT.
COPING – IN.
AL. STRESS – K.S.I.
WT. BM. MAT'L. – PCF
WSWK – K/FT.
X_n – FT.
P_n – KIPS.
TYPE STEEL – 572, 588
DEPTH – IN.
THICK. – IN.
WEIGHT – LBS.
YTOP – IN.
ΣZ_r – K/ROW
X-BEG. – FT.
WIDTH – IN.
YBOT. – IN.
SU – K/EA.
SIZE – BAR SIZE (#4, #10, etc.)
Δ – INCREMENT (NO. OF BARS)
DIST. – IN.

SIMPLE SPAN INPUT DATA PROBLEM NUMBER TB-2

03/19/71 T BEAM DESIGN

SPAN DATA

BEAM	D/A	L.L.C.	T L M	LENGTH	D.F.M.	D.F.V.	D.F.D.	NPL
TB	0	HS2C	0 0 0	50.000	1.273	1.429	0.800	1

WDLNC	WDLC	SWLL	E	W BM	FS	FC	WG	TYPE STEEL
0.160	0.105	0.0	3.63	0.0	20.00	1.200	0.150	0

CONCENTRATED LOADS

X1	P1	X2	P2	X3	P3	X4	P4
25.000	1.400	0.0	0.0	0.0	0.0	0.0	0.0

N		CONCRETE BEAM DATA				T-SLAB	
TENSILE	COMPRES	NO. ROWS	WIDTH	DELTA-W	DEPTH	DELTA-D	WIDTH	THICK
10	10	5	18.000	1.000	27.000	1.000	84.000	6.880

COMPRESSION STEEL				ROW NUMBER ONE				ROW NUMBER TWO			
NO.	SIZE	DELTA	DIST.	NO.	SIZE	DELTA	DIST.	NO.	SIZE	DELTA	DIST.
2	10	0	2.71	5	11	1	2.71	5	11	1	4.12

ROW NUMBER THREE				ROW NUMBER FOUR				ROW NUMBER FIVE			
NO.	SIZE	DELTA	DIST.	NO.	SIZE	DELTA	DIST.	NO.	SIZE	DELTA	DIST.
5	10	1	7.46	5	10	1	8.73	50	10	1	8.73

SIMPLE SPAN OUTPUT DATA PROBLEM NUMBER TB-2

MOMENTS (K-FT.) AT SPAN 1/20 POINTS

SP	GIRDER	P-LOAD	NON-C.	TOT.NC	COMP.	SIDEWK	LIVE LOAD	RR-I
1	65.8	1.7	9.5	77.1	6.2	0.0	112.4 T	0.0
2	124.7	3.5	18.0	146.2	11.8	0.0	210.2 T	0.0
3	176.6	5.2	25.5	207.4	16.7	0.0	293.1 T	0.0
4	221.6	7.0	32.0	260.6	21.0	0.0	361.4 T	0.0
5	259.7	8.7	37.5	306.0	24.6	0.0	414.9 T	0.0
6	290.9	10.5	42.0	343.4	27.6	0.0	453.7 T	0.0
7	315.2	12.2	45.5	372.9	29.9	0.0	482.3 T	0.0
8	332.5	14.0	48.0	394.5	31.5	0.0	505.4 T	0.0
9	342.9	15.7	49.5	408.1	32.5	0.0	513.8 T	0.0
10	346.3	17.5	50.0	413.8	32.8	0.0	507.4 T	0.0

WIDTH = 18.00 DEPTH = 27.00

ROW	SIZE	NUMBER	KD	JD	RESISTING MOMENTS FS= 20000 N= 10	FC= 1200 N= 10	LENGTH	#4 STIRRUP SPACING
1	11	5	6.58	28.85	376.4	843.7	50.000	5.85
2	11	5	8.83	27.73	695.3	1055.1	46.018	5.38
3	10	5	10.12	26.53	880.4	1099.4	32.577	10.00
4	10	3	10.74	25.93	973.8	1112.1	20.513	16.94

SHEARS (KIPS) AT SPAN 1/20 POINTS TB-2

SP	GIRDER	P-LOAD	NON-C.	TOT.NC	COMP.	SIDEWK	LIVE LOAD	RR-I
0	27.7	0.7	4.0	32.4	2.6	0.0	51.1 T	0.0
1	24.9	0.7	3.6	29.2	2.4	0.0	45.1 T	0.0
2	22.2	0.7	3.2	26.1	2.1	0.0	42.3 T	0.0
3	19.4	0.7	2.8	22.9	1.8	0.0	39.5 T	0.0
4	16.6	0.7	2.4	19.7	1.6	0.0	36.5 T	0.0
5	13.9	0.7	2.0	16.6	1.3	0.0	33.6 T	0.0
6	11.1	0.7	1.6	13.4	1.0	0.0	30.6 T	0.0
7	8.3	0.7	1.2	10.2	0.8	0.0	27.6 T	0.0
8	5.5	0.7	0.8	7.0	0.5	0.0	24.6 T	0.0
9	2.8	0.7	0.4	3.9	0.3	0.0	21.7 T	0.0
10	-0.0	0.7	-0.0	0.7	-0.0	0.0	19.1 T	0.0

	DEAD LOAD DEFLECTIONS (INCHES)					SHEAR	
SP	GIRDER	P-LOAD	NON-C.	TOT.NC	COMP.	RANGE(KIPS)	CON.SPAC(IN)
0	0.0	0.0	0.0	0.0	0.0	51.1	0.0
1	0.111	0.004	0.016	0.131	0.011	46.4	0.0
2	0.218	0.008	0.031	0.258	0.021	45.0	0.0
3	0.318	0.012	0.046	0.376	0.030	43.8	0.0
4	0.410	0.016	0.059	0.484	0.039	42.9	0.0
5	0.490	0.019	0.071	0.580	0.046	41.9	0.0
6	0.558	0.022	0.081	0.660	0.053	40.9	0.0
7	0.612	0.024	0.088	0.725	0.058	39.9	0.0
8	0.651	0.026	0.094	0.772	0.062	38.9	0.0
9	0.676	0.027	0.098	0.800	0.064	38.1	0.0
10	0.684	0.028	0.099	0.810	0.065	38.1	0.0

LIVE LOAD DEFLECTIONS (INCHES)

TRUCK	LANE	MILITARY	RAILROAD	SIDEWALK	L/ 800
0.384	0.245	0.305	0.0	0.0	0.750

SIMPLE SPAN

IDENTIFICATION

"CONT" TO CONTINUE REMARKS

PROG.	PROB. NO.	PROJECT NO.	COUNTY	DATE	DESIGNER	ETC.
* B04	7B-3	T BEAM WITH COMPRESSIVE STEEL				
*						

SPAN DATA

CODE			LIVE LOAD				SPAN LENGTH	DFM	DFV	DFD	NPL	WDLNC	WDLC	WSWK	EBEAM X 10^6	WT.BM.	ALLOW. STRESS		WT.BM. MAT'L.	TYPE STEEL
	TYPE	D/A	CLASS	T	L	M											STEEL	CONC.		
1	7B	1	HS15				50.000	1.273	1.429	8.00	1	.160	.105	.265	3.63		20.00	1.200	150	

1 = ANALYSIS (D/A) 1 = SKIP (T, L, M)
BLANK = DESIGN (D/A)

CONCENTRATED LOADS (LIMIT 40)

		X1	P1	X2	P2	X3	P3	X4	P4
2	1	25.00	14.00						
2	2								
2	3								
2	4								

CODE: TYPE
RB – ROLLED BEAM
RP – ROLLED W/PLATE
CB – COMPOSITE ROLLED
PG – PLATE GIRDER
CG – COMPOSITE GIRDER
TB – CONCRETE BEAM

STEEL BEAM DATA

ROLLED BEAM							NON-STANDARD BEAM			PLATE GIRDER							
BEAM 1			BEAM 2			P	N P	SECTION PROPERTIES			WEB		TOP FLANGE		BOTTOM FLANGE		CONT. W	CONT. T
DEPTH & WEIGHT			DEPTH & WEIGHT					I_o IN.^4	YTOP	YBOT.	DEPTH	THICK.	WIDTH	THICK.	WIDTH	THICK.		
3		W.F			W.F													

1 = CONSTANT THICKNESS (T)
WIDTH (W)

COMPOSITE SLAB			SHEAR CONN.		N	BOTTOM COVER PLATE				TOP COVER PLATE			
EFFECTIVE WIDTH	THICK.	COPING	ΣZ_r	SU	ES/EC	X-BEG.	THICK.	WIDTH	LENGTH	X-BEG.	THICK.	WIDTH	LENGTH
4													

P = 1 DESIGN WITH PL'S
N.P. = 1 DESIGN WITHOUT PL'S

CONCRETE BEAM DATA (T, RECT., FLAT SLAB)

"N"		NO.	BEAM (WEB) IN.				'T' SLAB		COMPRESSION ST.				ROW ONE				ROW TWO			
TEN.	COM.	ROWS	WIDTH	ΔW	DEPTH	ΔD	WIDTH	THICK.	NO.	SIZE	Δ	DIST.	NO.	SIZE	Δ	DIST.	NO.	SIZE	Δ	DIST.
3	10	10	4	18.000		27.000		84.000	6.880	2	10		2.71	5	11		2.71	5	11		4.12

ROW THREE				ROW FOUR				ROW FIVE				ROW SIX				ROW SEVEN				ROW EIGHT				ROW NINE			
NO.	SIZE	Δ	DIST.	NO.	SIZE	Δ	DIST.	NO.	SIZE	Δ	DIST.	NO.	SIZE	Δ	DIST.	NO.	SIZE	Δ	DIST.	NO.	SIZE	Δ	DIST.	NO.	SIZE	Δ	DIST.
4 5	10		.746	3	10		8.73																				

DIMENSIONS

LENGTH – FT.
WDL_{NC} – K/FT.
WDL_C – K/FT.
WT. BM. – K/FT.
COPING – IN.
AL. STRESS – K.S.I.
WT. BM. MAT'L. – PCF
WSWK – K/FT.
X_n – FT.
P_n – KIPS.
TYPE STEEL – 572, 588
DEPTH – IN.
THICK. – IN.
WEIGHT – LBS.
YTOP – IN.
ΣZ_r – K/ROW
X-BEG. – FT.
WIDTH – IN.
YBOT. – IN.
SU – K/EA.
SIZE – BAR SIZE (#4, #10, etc.)
Δ – INCREMENT (NO. OF BARS)
DIST. – IN.

SIMPLE SPAN INPUT DATA PROBLEM NUMBER TB-3

03/19/71 TBEAM WITH COMPRESSIVE STEEL

SPAN DATA

BEAM	D/A	L.L.C.	T L M	LENGTH	D.F.M.	D.F.V.	D.F.D.	NPL
TB	1	HS15	C 0 0	50.000	1.273	1.429	0.800	1

WDLNC	WDLC	SWLL	E	W BM	FS	FC	WG	TYPE STEEL
C.160	0.105	C.265	3.63	0.0	20.00	1.200	0.150	0

CONCENTRATED LOADS

X1	P1	X2	P2	X3	P3	X4	P4
25.000	1.400	0.0	0.0	0.0	0.0	0.0	0.0

N	CONCRETE BEAM DATA					T-SLAB	
TENSILE	COMPRES	NO. ROWS	WIDTH	DELTA-W	DEPTH	DELTA-D	WIDTH	THICK
10	10	4	18.000	0.0	27.000	0.0	84.000	6.880

COMPRESSION STEEL				ROW NUMBER ONE				ROW NUMBER TWO			
NO.	SIZE	DELTA	DIST.	NO.	SIZE	DELTA	DIST.	NO.	SIZE	DELTA	DIST.
2	10	0	2.71	5	11	0	2.71	5	11	0	4.12

ROW NUMBER THREE				ROW NUMBER FOUR				ROW NUMBER FIVE			
NO.	SIZE	DELTA	DIST.	NO.	SIZE	DELTA	DIST.	NO.	SIZE	DELTA	DIST.
5	10	0	7.46	3	10	0	8.73	0	0	0	0.0

SIMPLE SPAN OUTPUT DATA PROBLEM NUMBER TB-3

MOMENTS (K-FT.) AT SPAN 1/20 POINTS

SP	GIRDER	P-LOAD	NON-C.	TOT.NC	COMP.	SIDEWK	LIVE LCAD	RR-I
1	65.8	1.7	9.5	77.1	6.2	15.7	89.4 M	0.0
2	124.7	3.5	18.0	146.2	11.8	29.8	168.9 M	0.0
3	176.6	5.2	25.5	207.4	16.7	42.2	238.6 M	0.0
4	221.6	7.0	32.0	260.6	21.0	53.0	298.5 M	0.0
5	259.7	8.7	37.5	306.0	24.6	62.1	348.6 M	0.0
6	290.9	10.5	42.0	343.4	27.6	69.6	388.9 M	0.0
7	315.2	12.2	45.5	372.9	29.9	75.4	419.3 M	0.0
8	332.5	14.0	48.0	394.5	31.5	79.5	439.9 M	0.0
9	342.9	15.7	49.5	408.1	32.5	82.0	450.8 M	0.0
10	346.3	17.5	50.0	413.8	32.8	82.8	451.7 M	0.0

ROW	SIZE	NUMBER	KD	JD	RESISTING MOMENTS FS= 20000 N= 10	FC= 1200 N= 10	LENGTH	#4 STIRRUP SPACING
1	11	5	6.58	28.85	376.4	843.7	50.000	6.59
2	11	5	8.83	27.73	695.3	1055.1	45.630	6.02
3	10	5	10.12	26.53	880.4	1099.4	32.256	11.37
4	10	3	10.74	25.93	973.8	1112.1	21.378	16.94

SHEARS (KIPS) AT SPAN 1/20 POINTS TB-3

SP	GIRDER	P-LOAD	NON-C.	TOT.NC	COMP.	SIDEWK	LIVE LOAD	RR-I
0	27.7	0.7	4.0	32.4	2.6	6.6	40.1 M	0.0
1	24.9	0.7	3.6	29.2	2.4	6.0	35.9 M	0.0
2	22.2	0.7	3.2	26.1	2.1	5.4	34.0 M	0.0
3	19.4	0.7	2.8	22.9	1.8	4.8	32.1 M	0.0
4	16.6	0.7	2.4	19.7	1.6	4.2	30.2 M	0.0
5	13.9	0.7	2.0	16.6	1.3	3.7	28.2 M	0.0
6	11.1	0.7	1.6	13.4	1.0	3.2	26.2 M	0.0
7	8.3	0.7	1.2	10.2	0.8	2.8	24.2 M	0.0
8	5.5	0.7	0.8	7.0	0.5	2.4	22.2 M	0.0
9	2.8	0.7	0.4	3.9	0.3	2.0	20.3 M	0.0
10	-0.0	0.7	-0.0	0.7	-0.0	1.7	18.3 M	0.0

	DEAD LOAD DEFLECTIONS (INCHES)					SHEAR	
SP	GIRDER	P-LOAD	NON-C.	TOT.NC	COMP.	RANGE(KIPS)	CON.SPAC(IN)
0	0.0	0.0	0.0	0.0	0.0	46.7	0.0
1	0.112	0.004	0.016	0.132	0.011	42.8	0.0
2	0.220	0.008	0.032	C.260	0.021	41.8	0.0
3	0.321	0.012	0.046	0.379	0.030	41.4	0.0
4	0.412	0.016	0.060	0.488	0.039	41.0	0.0
5	0.493	0.019	0.071	0.583	0.047	40.7	0.0
6	0.561	0.022	0.081	0.663	0.053	40.4	0.0
7	0.615	0.024	0.089	0.728	0.058	40.2	0.0
8	0.654	0.026	0.094	0.775	0.062	40.0	0.0
9	0.678	0.027	0.098	0.803	0.064	39.9	0.0
10	0.686	0.028	0.099	0.813	0.065	39.9	0.0

LIVE LOAD DEFLECTIONS (INCHES)

TRUCK	LANE	MILITARY	RAILROAD	SIDEWALK	L/1000
0.290	0.185	0.307	0.0	0.105	0.600

SIMPLE SPAN

IDENTIFICATION

"CONT" TO CONTINUE REMARKS

	PROG.	PROB. NO.	PROJECT NO.	COUNTY	DATE	DESIGNER	ETC.
*	B,0,4	TB-4	T BEAM DESIGN BUILD	DEPTH AND WIDTH OF WEB			
*							

SPAN DATA

	CODE TYPE	D/A	LIVE LOAD CLASS	T	L	M	SPAN LENGTH	DFM	DFV	DFD	NPL	WDLNC	WDLC	WSWK	EBEAM X 10^6	WT.BM.	ALLOW. STRESS STEEL	ALLOW. STRESS CONC.	WT.BM. MAT'L.	TYPE STEEL
1	TB		RR72				25000	.500	.125	.500		.160	.105		.363		2000	1200	150	

1 = ANALYSIS (D/A) 1 = SKIP (T, L, M)
BLANK = DESIGN (D/A)

CONCENTRATED LOADS (LIMIT 40)

	X1	P1	X2	P2	X3	P3	X4	P4
2 1								
2 2								
2 3								
2 4								

CODE: TYPE
RB – ROLLED BEAM
RP – ROLLED W/PLATE
CB – COMPOSITE ROLLED
PG – PLATE GIRDER
CG – COMPOSITE GIRDER
TB – CONCRETE BEAM

STEEL BEAM DATA

	ROLLED BEAM: BEAM 1 DEPTH & WEIGHT	ROLLED BEAM: BEAM 2 DEPTH & WEIGHT	P	NP	NON-STANDARD BEAM: SECTION PROPERTIES I_o IN.^4	YTOP	YBOT.	PLATE GIRDER: WEB DEPTH	WEB THICK.	TOP FLANGE WIDTH	TOP FLANGE THICK.	BOTTOM FLANGE WIDTH	BOTTOM FLANGE THICK.	CONT. W	CONT. T
3	W,F	W,F													

1 = CONSTANT THICKNESS (T) WIDTH (W)

	COMPOSITE SLAB: EFFECTIVE WIDTH	THICK.	COPING	SHEAR CONN. ΣZ_r	SU	N ES/EC	BOTTOM COVER PLATE: X-BEG.	THICK.	WIDTH	LENGTH	TOP COVER PLATE: X-BEG.	THICK.	WIDTH	LENGTH
4														

P = 1 DESIGN WITH ℄'s
N.P. = 1 DESIGN WITHOUT ℄'s

CONCRETE BEAM DATA (T, RECT., FLAT SLAB)

	"N" TEN.	"N" COM.	NO. ROWS	BEAM (WEB) IN. WIDTH	ΔW	DEPTH	ΔD	'T' SLAB WIDTH	THICK.	COMPRESSION ST. NO.	SIZE	Δ	DIST.	ROW ONE NO.	SIZE	Δ	DIST.	ROW TWO NO.	SIZE	Δ	DIST.
3	10	10	5	.000	1.000	0.000	1.000	84.000	6.880	2	10		27.1	5	11	1	27.1	5	11	1	4.12

	ROW THREE NO.	SIZE	Δ	DIST.	ROW FOUR NO.	SIZE	Δ	DIST.	ROW FIVE NO.	SIZE	Δ	DIST.	ROW SIX NO.	SIZE	Δ	DIST.	ROW SEVEN NO.	SIZE	Δ	DIST.	ROW EIGHT NO.	SIZE	Δ	DIST.	ROW NINE NO.	SIZE	Δ	DIST.
4	5	10	1	7.46	5	10	1	8.73	50	10	1	8.73																

DIMENSIONS

LENGTH – FT.
WDLNC – K/FT.
WDLC – K/FT.
WT. BM. – K/FT.
COPING – IN.
AL. STRESS – K.S.I.
WT. BM. MAT'L. – PCF
WSWK – K/FT.
X_n – FT.
P_n – KIPS
TYPE STEEL – 572,588
DEPTH – IN.
THICK. – IN.
WEIGHT – LBS.
YTOP – IN.
ΣZ_r – K/ROW
X-BEG. – FT.
WIDTH – IN.
YBOT. – IN.
SU – K/EA.
SIZE – BAR SIZE (#4, #10, etc.)
Δ – INCREMENT (NO. OF BARS)
DIST. – IN.

SIMPLE SPAN INPUT DATA PROBLEM NUMBER TB-4

03/19/71 T BEAM DESIGN BUILD DEPTH AND WIDTH OF WEB

SPAN DATA

BEAM	D/A	L.L.C.	T L M	LENGTH	D.F.M.	D.F.V.	D.F.D.	NPL
TB	0	RR72	0 0 0	25.000	0.500	0.125	0.500	0

WDLNC	WDLC	SWLL	E	W BM	FS	FC	WG	TYPE STEEL
0.160	0.105	0.0	3.63	0.0	20.00	1.200	0.150	0

N CONCRETE BEAM DATA T-SLAB

TENSILE	COMPRES	NO. ROWS	WIDTH	DELTA-W	DEPTH	DELTA-D	WIDTH	THICK
10	10	5	0.0	1.000	0.0	1.000	84.000	6.880

COMPRESSION STEEL				ROW NUMBER ONE				ROW NUMBER TWO			
NO.	SIZE	DELTA	DIST.	NO.	SIZE	DELTA	DIST.	NO.	SIZE	DELTA	DIST.
2	10	0	2.71	5	11	1	2.71	5	11	1	4.12

ROW NUMBER THREE				ROW NUMBER FOUR				ROW NUMBER FIVE			
NO.	SIZE	DELTA	DIST.	NO.	SIZE	DELTA	DIST.	NO.	SIZE	DELTA	DIST.
5	10	1	7.46	5	10	1	8.73	50	10	1	8.73

SIMPLE SPAN OUTPUT DATA PROBLEM NUMBER TB-4

MOMENTS (K-FT.) AT SPAN 1/20 POINTS

SP	GIRDER	P-LOAD	NON-C.	TOT.NC	COMP.	SIDEWK	LIVE LOAD	RR-I
1	15.6	0.0	2.4	18.0	1.6	0.0	58.8 R	7.4
2	29.6	0.0	4.5	34.1	3.0	0.0	108.0 R	13.5
3	41.9	0.0	6.4	48.3	4.2	0.0	148.5 R	18.6
4	52.6	0.0	8.0	60.6	5.2	0.0	180.0 R	22.5
5	61.6	0.0	9.4	71.0	6.2	0.0	204.2 R	25.5
6	69.0	0.0	10.5	79.5	6.9	0.0	234.0 R	29.2
7	74.8	0.0	11.4	86.2	7.5	0.0	256.5 R	32.1
8	78.9	0.0	12.0	90.9	7.9	0.0	270.0 R	33.8
9	81.4	0.0	12.4	93.7	8.1	0.0	274.5 R	34.3
10	82.2	0.0	12.5	94.7	8.2	0.0	270.0 R	33.7

WIDTH = 18.00 DEPTH = 24.00

RESISTING MOMENTS

ROW	SIZE	NUMBER	KD	JD	FS= 20000 N= 10	FC= 1200 N= 10	LENGTH	#4 STIRRUP SPACING
1	11	5	6.22	25.85	338.9	718.1	25.000	6.44
2	11	2	7.05	25.42	451.4	812.2	16.923	13.65

SHEARS (KIPS) AT SPAN 1/20 POINTS TB-4

SP	GIRDER	P-LOAD	NON-C.	TOT.NC	COMP.	SIDEWK	LIVE LOAD	RR-I
0	13.1	0.0	2.0	15.1	1.3	0.0	51.1 R	6.4
1	11.8	0.0	1.8	13.6	1.2	0.0	47.1 R	5.9
2	10.5	0.0	1.6	12.1	1.0	0.0	43.2 R	5.4
3	9.2	0.0	1.4	10.6	0.9	0.0	39.6 R	5.0
4	7.9	0.0	1.2	9.1	0.8	0.0	36.0 R	4.5
5	6.6	0.0	1.0	7.6	0.7	0.0	32.4 R	4.0
6	5.3	0.0	0.8	6.1	0.5	0.0	28.8 R	3.6
7	3.9	0.0	0.6	4.5	0.4	0.0	25.2 R	3.1
8	2.6	0.0	0.4	3.0	0.3	0.0	21.1 R	2.6
9	1.3	0.0	0.2	1.5	0.1	0.0	17.8 R	2.2
10	-0.0	0.0	-0.0	0.0	-0.0	0.0	14.6 R	1.8

	DEAD LOAD DEFLECTIONS (INCHES)					SHEAR	
SP	GIRDER	P-LOAD	NON-C.	TOT.NC	COMP.	RANGE(KIPS)	CON.SPAC(IN)
0	0.0	0.0	0.0	0.0	0.0	51.1	0.0
1	0.012	-0.0	0.002	0.014	0.001	47.1	0.0
2	0.023	-0.0	0.004	0.027	0.002	43.2	0.0
3	0.034	-0.0	0.005	0.039	0.003	39.6	0.0
4	0.043	-0.0	0.007	0.050	0.004	36.0	0.0
5	0.052	-0.0	0.008	0.060	0.005	32.4	0.0
6	0.059	-0.0	0.009	0.068	0.006	28.8	0.0
7	0.065	-0.0	0.010	0.075	0.006	25.2	0.0
8	0.069	-0.0	0.011	0.080	0.007	21.1	0.0
9	0.072	-0.0	0.011	0.083	0.007	17.8	0.0
10	0.073	-0.0	0.011	0.084	0.007	14.6	0.0

LIVE LOAD DEFLECTIONS (INCHES)

TRUCK	LANE	MILITARY	RAILROAD	SIDEWALK	L/ 640
0.0	0.0	0.0	0.201	0.0	0.469

SIMPLE SPAN

10-15-70

STATE HIGHWAY DEPARTMENT OF GEORGIA
BRIDGE DIVISION

IDENTIFICATION

"CONT" TO CONTINUE REMARKS

	PROG.	PROB. NO.	PROJECT NO.	COUNTY	DATE	DESIGNER	ETC.
*	B,0,4	TB-5	DESIGN CONCRETE BEAM				
*							

SPAN DATA

CODE	TYPE	D/A	LIVE LOAD CLASS	T	L	M	SPAN LENGTH	DFM	DFV	DFD	NPL	WDLNC	WDLC	WSWK	EBEAM X 10^6	WT.BM.	ALLOW. STRESS STEEL	ALLOW. STRESS CONC.	WT.BM. MAT'L.	TYPE STEEL
1	TB		HS20				40.000	1.000	1.000	1.000		.308	.133		2.90		20.00	1.200	150	

1 = ANALYSIS (D/A) 1 = SKIP (T, L, M)
BLANK = DESIGN (D/A)

CONCENTRATED LOADS (LIMIT 40)

	X1	P1	X2	P2	X3	P3	X4	P4
2 1								
2 2								
2 3								
2 4								

CODE: TYPE
RB – ROLLED BEAM
RP – ROLLED W/PLATE
CB – COMPOSITE ROLLED
PG – PLATE GIRDER
CG – COMPOSITE GIRDER
TB – CONCRETE BEAM

STEEL BEAM DATA

ROLLED BEAM: BEAM 1 DEPTH & WEIGHT	BEAM 2 DEPTH & WEIGHT	P	NP	NON-STANDARD BEAM: SECTION PROPERTIES I_o IN.^4	YTOP	YBOT.	PLATE GIRDER: WEB DEPTH	WEB THICK.	TOP FLANGE WIDTH	TOP FLANGE THICK.	BOTTOM FLANGE WIDTH	BOTTOM FLANGE THICK.	CON. W	CON. T
3 W,F	W,F													

1 = CONSTANT THICKNESS (T) WIDTH (W)

COMPOSITE SLAB: EFFECTIVE WIDTH	THICK.	COPING	SHEAR CONN. ΣZ_r	SU	N ES/EC	BOTTOM COVER PLATE X-BEG.	THICK.	WIDTH	LENGTH	TOP COVER PLATE X-BEG.	THICK.	WIDTH	LENGTH
4													

P = 1 DESIGN WITH PL's
N.P. = 1 DESIGN WITHOUT PL's

CONCRETE BEAM DATA (T, RECT., FLAT SLAB)

"N" TEN.	"N" COM.	NO. ROWS	BEAM (WEB) IN. WIDTH	ΔW	DEPTH	ΔD	'T' SLAB WIDTH	THICK.	COMPRESSION ST. NO.	SIZE	Δ	DIST.	ROW ONE NO.	SIZE	Δ	DIST.	ROW TWO NO.	SIZE	Δ	DIST.
3 1.0	1.0	5	18.000	2.50	24.000	1.000	18.00	0.0					5	1.1	1	2.71	5	1.1	1	4.12

ROW THREE NO.	SIZE	Δ	DIST.	ROW FOUR NO.	SIZE	Δ	DIST.	ROW FIVE NO.	SIZE	Δ	DIST.	ROW SIX NO.	SIZE	Δ	DIST.	ROW SEVEN NO.	SIZE	Δ	DIST.	ROW EIGHT NO.	SIZE	Δ	DIST.	ROW NINE NO.	SIZE	Δ	DIST.
4 5	1.1	1	7.46	5	1.1	1	8.73	5	1.1	1	10.00																

LENGTH – FT.
WDLNC – K/FT.
WDLC – K/FT.
WT. BM. – K/FT.

COPING – IN.
AL. STRESS – K.S.I.
WT. BM. MAT'L. – PCF
WSWK – K/FT.
X_n – FT.

DIMENSIONS
P_n – KIPS.
TYPE STEEL – 572,588
DEPTH – IN.
THICK. – IN.

WEIGHT – LBS.
YTOP – IN.
ΣZ_r – K/ROW
X-BEG. – FT.
WIDTH – IN.

YBOT. – IN.
SU – K/EA.
SIZE – BAR SIZE (#4, #10, etc.)
Δ – INCREMENT (NO. OF BARS)
DIST. – IN.

SIMPLE SPAN INPUT DATA PROBLEM NUMBER TB-5

03/19/71 DESIGN CONCRETE BEAM

SPAN DATA

BEAM	D/A	L.L.C.	T L M	LENGTH	D.F.M.	D.F.V.	D.F.D.	NPL
TB	0	HS 0	0 0 1	40.000	1.000	1.000	1.000	0

WDLNC	WDLC	SWLL	E	W BM	FS	FC	WG	TYPE STEEL
0.308	0.133	0.265	2.90	0.0	20.00	1.200	0.150	0

N CONCRETE BEAM DATA T-SLAB

TENSILE	COMPRES	NO. ROWS	WIDTH	DELTA-W	DEPTH	DELTA-D	WIDTH	THICK
10	10	5	18.000	0.0	24.000	1.000	18.000	0.0

COMPRESSION STEEL				ROW NUMBER ONE				ROW NUMBER TWO			
NO.	SIZE	DELTA	DIST.	NO.	SIZE	DELTA	DIST.	NO.	SIZE	DELTA	DIST.
0	0	0	0.0	5	11	1	2.71	5	11	1	4.12

ROW NUMBER THREE				ROW NUMBER FOUR				ROW NUMBER FIVE			
NO.	SIZE	DELTA	DIST.	NO.	SIZE	DELTA	DIST.	NO.	SIZE	DELTA	DIST.
5	11	1	7.46	5	11	1	8.73	5	11	1	10.00

SIMPLE SPAN OUTPUT DATA PROBLEM NUMBER TB-5

MOMENTS (K-FT.) AT SPAN 1/20 POINTS

SP	GIRDER	P-LOAD	NON-C.	TOT.NC	COMP.	SIDEWK	LIVE LOAD	RR-I
1	22.1	0.0	11.7	33.8	5.1	10.1	0.0 M	0.0
2	41.8	0.0	22.2	64.0	9.6	19.1	0.0 M	0.0
3	59.3	0.0	31.4	90.7	13.6	27.0	0.0 M	0.0
4	74.4	0.0	39.4	113.8	17.0	33.9	0.0 M	0.0
5	87.2	0.0	46.2	133.4	19.9	39.7	0.0 M	0.0
6	97.6	0.0	51.7	149.4	22.3	44.5	0.0 M	0.0
7	105.8	0.0	56.1	161.8	24.2	48.2	0.0 M	0.0
8	111.6	0.0	59.1	170.7	25.5	50.9	0.0 M	0.0
9	115.1	0.0	61.0	176.1	26.3	52.5	0.0 M	0.0
10	116.2	0.0	61.6	177.8	26.6	53.0	0.0 M	0.0

WIDTH = 18.00 DEPTH = 31.00

					RESISTING MOMENTS			#4
ROW	SIZE	NUMBER	KD	JD	FS= 20000	FC= 1200	LENGTH	STIRRUP
					N= 10	N= 10		SPACING
1	11	5	11.91	24.32	316.2	260.8	40.000	15.50

SHEARS (KIPS) AT SPAN 1/20 POINTS TB-5

SP	GIRDER	P-LOAD	NON-C.	TOT.NC	COMP.	SIDEWK	LIVE LOAD	RR-I
0	11.6	0.0	6.2	17.8	2.7	5.3	0.0 M	0.0
1	10.5	0.0	5.5	16.0	2.4	4.8	0.0 M	0.0
2	9.3	0.0	4.9	14.2	2.1	4.3	0.0 M	0.0
3	8.1	0.0	4.3	12.4	1.9	3.8	0.0 M	0.0
4	7.0	0.0	3.7	10.7	1.6	3.4	0.0 M	0.0
5	5.8	0.0	3.1	8.9	1.3	3.0	0.0 M	0.0
6	4.6	0.0	2.5	7.1	1.1	2.6	0.0 M	0.0
7	3.5	0.0	1.8	5.3	0.8	2.2	0.0 M	0.0
8	2.3	0.0	1.2	3.6	0.5	1.9	0.0 M	0.0
9	1.2	0.0	0.6	1.8	0.3	1.6	0.0 M	0.0
10	-0.0	0.0	-0.0	0.0	-0.0	1.3	0.0 M	0.0

	DEAD LOAD DEFLECTIONS (INCHES)					SHEAR	
SP	GIRDER	P-LOAD	NON-C.	TOT.NC	COMP.	RANGE(KIPS)	CON.SPAC(IN)
0	0.0	0.0	0.0	0.0	0.0	5.3	0.0
1	0.093	-0.0	0.049	0.142	0.021	4.8	0.0
2	0.183	-0.0	0.097	0.280	0.042	4.3	0.0
3	0.269	-0.0	0.142	0.411	0.061	3.9	0.0
4	0.347	-0.0	0.184	0.530	0.079	3.6	0.0
5	0.416	-0.0	0.220	0.636	0.095	3.3	0.0
6	0.475	-0.0	0.252	0.726	0.109	3.1	0.0
7	0.522	-0.0	0.276	0.798	0.119	2.9	0.0
8	0.556	-0.0	0.295	0.850	0.127	2.8	0.0
9	0.577	-0.0	0.306	0.882	0.132	2.7	0.0
10	0.584	-0.0	0.309	0.893	0.134	2.6	0.0

LIVE LOAD DEFLECTIONS (INCHES)

TRUCK	LANE	MILITARY	RAILROAD	SIDEWALK	L/1000
0.0	0.0	0.0	0.0	0.198	0.480

SIMPLE SPAN

IDENTIFICATION

"CONT" TO CONTINUE REMARKS

	PROG.	PROB. NO.	PROJECT NO.	COUNTY	DATE	DESIGNER	ETC.
*	B,0,4	TB-6	RESISTING MOMENTS				
*							

SPAN DATA

CODE	TYPE	D/A	LIVE LOAD CLASS	T	L	M	SPAN LENGTH	DFM	DFV	DFD	NPL	WDLNC	WDLC	WSWK	EBEAM X 10^6	WT.BM.	ALLOW. STRESS STEEL	ALLOW. STRESS CONC.	WT.BM. MAT'L.	TYPE STEEL
1	TB		HS20				0 0										2000	1200	150	

1 = ANALYSIS (D/A) 1 = SKIP (T, L, M)
BLANK = DESIGN (D/A)

CONCENTRATED LOADS (LIMIT 40)

		X1	P1	X2	P2	X3	P3	X4	P4
2	1								
2	2								
2	3								
2	4								

CODE: TYPE
RB – ROLLED BEAM
RP – ROLLED W/PLATE
CB – COMPOSITE ROLLED
PG – PLATE GIRDER
CG – COMPOSITE GIRDER
TB – CONCRETE BEAM

STEEL BEAM DATA

ROLLED BEAM					NON-STANDARD BEAM			PLATE GIRDER							
BEAM 1		BEAM 2		P	N.P.	SECTION PROPERTIES			WEB		TOP FLANGE		BOTTOM FLANGE		CONT. W	CONT. T
DEPTH & WEIGHT		DEPTH & WEIGHT				I_o IN.^4	YTOP	YBOT.	DEPTH	THICK.	WIDTH	THICK.	WIDTH	THICK.		
3	W,F		W,F													

1 = CONSTANT THICKNESS (T)
WIDTH (W)

COMPOSITE SLAB			SHEAR CONN.		N	BOTTOM COVER PLATE				TOP COVER PLATE			
EFFECTIVE WIDTH	THICK.	COPING	ΣZ_r	SU	ES/EC	X-BEG.	THICK.	WIDTH	LENGTH	X-BEG.	THICK.	WIDTH	LENGTH
4													

P = 1 DESIGN WITH ℄'s
N.P. = 1 DESIGN WITHOUT ℄'s

CONCRETE BEAM DATA (T, RECT., FLAT SLAB)

"N"		NO.	BEAM (WEB) IN.				'T' SLAB		COMPRESSION ST.				ROW ONE				ROW TWO			
TEN.	COM.	ROWS	WIDTH	ΔW	DEPTH	ΔD	WIDTH	THICK.	NO.	SIZE	Δ	DIST.	NO.	SIZE	Δ	DIST.	NO.	SIZE	Δ	DIST.
3	70	70	4	18.000		27.000		84.000	6.880					05	11		27.1	5	11		4.12

ROW THREE				ROW FOUR				ROW FIVE				ROW SIX				ROW SEVEN				ROW EIGHT				ROW NINE			
NO.	SIZE	Δ	DIST.	NO.	SIZE	Δ	DIST.	NO.	SIZE	Δ	DIST.	NO.	SIZE	Δ	DIST.	NO.	SIZE	Δ	DIST.	NO.	SIZE	Δ	DIST.	NO.	SIZE	Δ	DIST.
5	10		7.46	3	10		8.73																				

LENGTH – FT.
WDLNC – K/FT.
WDLC – K/FT.
WT. BM. – K/FT.

COPING – IN.
AL. STRESS – K.S.I.
WT. BM. MAT'L. – PCF
WSWK – K/FT.
X_n – FT.

DIMENSIONS
P_n – KIPS
TYPE STEEL – 572, 588
DEPTH – IN.
THICK. – IN.

WEIGHT – LBS.
YTOP – IN.
ΣZ_r – K/ROW
X-BEG. – FT.
WIDTH – IN.

YBOT. – IN.
SU – K/EA.
SIZE – BAR SIZE (#4, #10, etc.)
Δ – INCREMENT (NO. OF BARS)
DIST. – IN.

STATE HIGHWAY DEPARTMENT OF GEORGIA
BRIDGE DIVISION

10-15-70

SIMPLE SPAN INPUT DATA PROBLEM NUMBER TB-6

03/19/71 RESISTING MOMENTS

SPAN DATA

BEAM	D/A	L.L.C.	T L M	LENGTH	D.F.M.	D.F.V.	D.F.D.	NPL
TB	0	HS20	0 0 0	0.0	0.0	0.0	0.0	0

WDLNC	WDLC	SWLL	E	W BM	FS	FC	WG	TYPE STEEL
0.0	0.0	0.0	0.0	0.0	20.00	1.200	0.150	0

N CONCRETE BEAM DATA T-SLAB

TENSILE	COMPRES	NO. ROWS	WIDTH	DELTA-W	DEPTH	DELTA-D	WIDTH	THICK
10	10	4	18.000	0.0	27.000	0.0	84.000	6.880

COMPRESSION STEEL				ROW NUMBER ONE				ROW NUMBER TWO			
NO.	SIZE	DELTA	DIST.	NO.	SIZE	DELTA	DIST.	NO.	SIZE	DELTA	DIST.
0	0	0	0.0	5	11	0	2.71	5	11	0	4.12

ROW NUMBER THREE				ROW NUMBER FOUR				ROW NUMBER FIVE			
NO.	SIZE	DELTA	DIST.	NO.	SIZE	DELTA	DIST.	NO.	SIZE	DELTA	DIST.
5	10	0	7.46	3	10	0	8.73	0	0	0	0.0

WIDTH = 18.00 DEPTH = 27.00

RESISTING MOMENTS #4

ROW	SIZE	NUMBER	KD	JD	FS= 20000 N= 10	FC= 1200 N= 10	LENGTH	STIRRUP SPACING
1	11	5	6.74	28.88	376.1	818.5	0.0	0.0
2	11	5	9.12	27.68	696.7	1010.3	0.0	0.0
3	10	5	10.42	26.48	881.3	1053.6	0.0	0.0
4	10	3	11.04	25.88	974.1	1066.2	0.0	0.0